SUZUKI

# VL1500

# SERVICE MANUAL

99500-39164-01E

# FOREWORD

*This manual contains an introductory description on the SUZUKI VL1500 and procedures for its inspection/service and overhaul of its main components.*
*Other information considered as generally known is not included.*
*Read the GENERAL INFORMATION section to familiarize yourself with the motorcycle and its maintenance. Use this section as well as other sections as a guide for proper inspection and service.*
*This manual will help you know the motorcycle better so that you can assure your customers of fast and reliable service.*

- *This manual has been prepared on the basis of the latest specifications at the time of publication. If modifications have been made since then, differences may exist between the content of this manual and the actual motorcycle.*
- *Illustrations in this manual are used to show the basic principles of operation and work procedures. They may not represent the actual motorcycle exactly in detail.*
- *This manual is written for persons who have enough knowledge, skills and tools, including special tools, for servicing SUZUKI motorcycles. If you do not have the proper knowledge and tools, ask your authorized SUZUKI motorcycle dealer to help you.*

**⚠WARNING**

**Inexperienced mechanics or mechanics without the proper tools and equipment may not be able to properly perform the services described in this manual. Improper repair may result in injury to the mechanic and may render the motorcycle unsafe for the rider and passenger.**

**SUZUKI MOTOR CORPORATION**

*Motorcycle Service Department*

© COPYRIGHT SUZUKI MOTOR CORPORATION 1997

# GROUP INDEX


| | |
|---|---|
| GENERAL INFORMATION | 1 |
| PERIODIC MAINTENANCE | 2 |
| ENGINE | 3 |
| SHAFT DRIVE | 4 |
| FUEL SYSTEM | 5 |
| CHASSIS | 6 |
| ELECTRICAL SYSTEM | 7 |
| SERVICING INFORMATION | 8 |
| VL1500X/Y ('99, 2000-MODELS) | 9 |
| VL1500K1 ('01-MODEL) | 10 |
| VL1500K2 ('02-MODEL) | 11 |

# HOW TO USE THIS MANUAL

## TO LOCATE WHAT YOU ARE LOOKING FOR:

1. The text of this manual is divided into sections.
2. The section titles are listed in the GROUP INDEX.
3. Holding the manual as shown at the right will allow you to find the first page of the section easily.
4. The contents are listed on the first page of each section to help find the item and page you need.

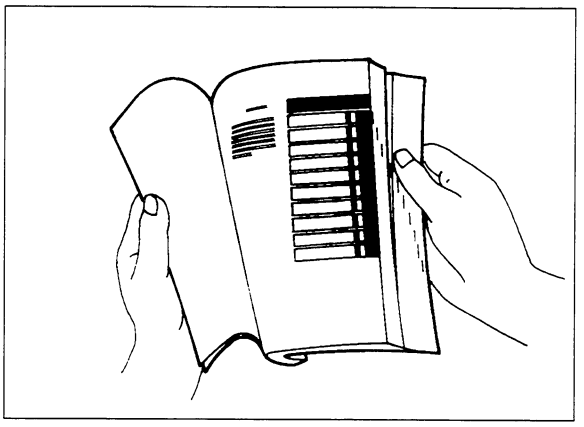

## COMPONENT PARTS AND WORK TO BE DONE

Under the name of each system or unit, is its exploded view. Work instructions and other service information such as the tightening torque, lubricating points and locking agent points, are provided.

Example: FRONT WHEEL

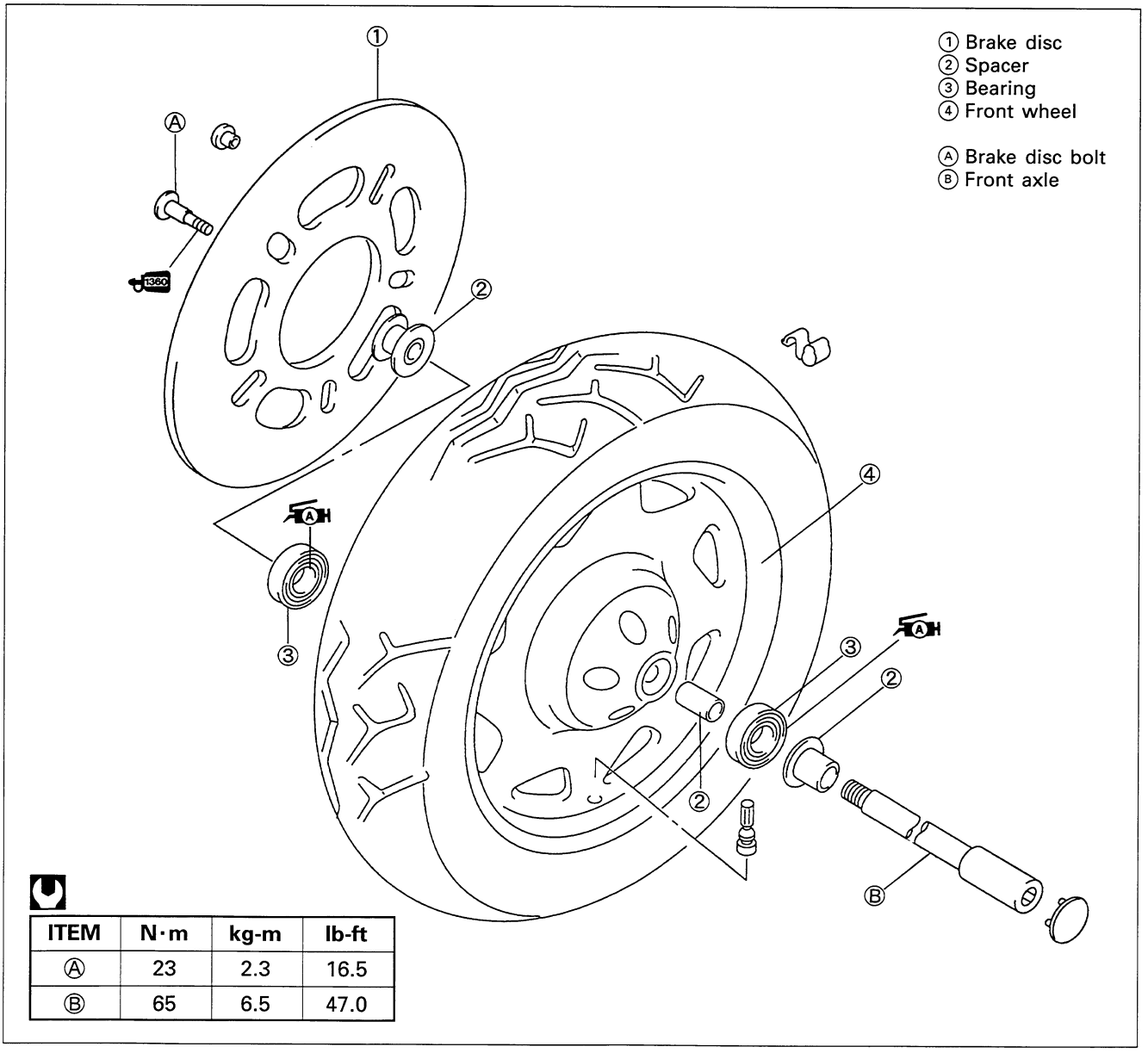


| ITEM | N·m | kg-m | lb-ft |
|---|---|---|---|
| Ⓐ | 23 | 2.3 | 16.5 |
| Ⓑ | 65 | 6.5 | 47.0 |

## SYMBOL

Listed in the table below are the symbols indicating instructions and other information necessary for servicing. The meaning of each symbol is also included in the table.

| SYMBOL | DEFINITION | SYMBOL | DEFINITION |
|---|---|---|---|
| | Torque control required.<br>Data beside it indicates specified torque. | | Measure in voltage range. |
| | Apply oil. Use engine oil unless otherwise specified. | | Measure in resistance range. |
| | Apply SUZUKI SUPER GREASE "A".<br><br>99000-25010 | | Measure in current range. |
| | Apply SUZUKI MOLY PASTE.<br><br>99000-25140 | | Measure in diode test range. |
| | Apply SUZUKI BOND "1207B".<br><br>99000-31140 | | Measure in continuity test range. |
| | Apply SUZUKI BOND "1216".<br><br>99000-31160 | | Use special tool. |
| | Apply THREAD LOCK SUPER "1303".<br>99000-32030 | | Apply or use brake fluid. |
| | Apply THREAD LOCK "1342".<br><br>99000-32050 | | Use fork oil.<br><br>99000-99001-SS8 |
| | Apply THREAD LOCK SUPER "1360".<br>99000-32130 | | |

# GENERAL INFORMATION

1

CONTENTS


WARNING/CAUTION/NOTE ..... 1- 1
GENERAL PRECAUTIONS ..... 1- 1
SUZUKI VL1500W ('98-MODEL) ..... 1- 3
SERIAL NUMBER LOCATION ..... 1- 3
FUEL AND OIL RECOMMENDATION ..... 1- 3
FUEL ..... 1- 3
ENGINE OIL ..... 1- 3
GEAR OIL (FINAL DRIVE GEAR OIL) ..... 1- 4
BRAKE FLUID ..... 1- 4
FRONT FORK OIL ..... 1- 4
BREAK-IN PROCEDURES ..... 1- 4
CYLINDER IDENTIFICATION ..... 1- 4
INFORMATION LABELS ..... 1- 5
SPECIFICATIONS ..... 1- 6
COUNTRY AND AREA CODES ..... 1- 8

# WARNING/CAUTION/NOTE

Please read this manual and follow its instructions carefully. To emphasize special information, the symbol and the words WARNING, CAUTION and NOTE have special meanings. Pay special attention to the messages highlighted by these signal words.

**⚠WARNING**

**Indicates a potential hazard that could result in death or injury.**

**⚠ CAUTION**

**Indicates a potential hazard that could result in motorcycle damage.**

*NOTE:*
*Indicates special information to make maintenance easier or instructions clearer.*

Please note, however, that the warnings and cautions contained in this manual cannot possibly cover all potential hazards relating to the servicing, or lack of servicing, of the motorcycle. In addition to the WARNINGS and CAUTIONS stated, you must use good judgement and basic mechanical safety principles. If you are unsure about how to perform a particular service operation, ask a more experienced mechanic for advice.

# GENERAL PRECAUTIONS

**⚠WARNING**

* **Proper service and repair procedures are important for the safety of the service mechanic and the safety and reliability of the motorcycle.**
* **When two or more persons work together, pay attention to the safety of each other.**
* **When it is necessary to run the engine indoors, make sure that exhaust gas is forced outdoors.**
* **When working with toxic or flammable materials, make sure that the area you work in is well ventilated and that you follow all of the material manufacturer's instructions.**
* **Never use gasoline as a cleaning solvent.**
* **To avoid getting burned, do not touch the engine, engine oil, and exhaust system until they have cooled.**
* **After servicing the fuel, oil, exhaust or brake systems, check all of the lines and fittings related to the system for leaks.**

**⚠ CAUTION**

* If parts replacement is necessary, replace the parts with Suzuki Genuine Parts or their equivalent.
* When removing parts that are to be reused, keep them arranged in an orderly manner so that they may be reinstalled in the proper order.
* Be sure to use special tools when instructed.
* Make sure that all parts used in reassembly are clean. Lubricate them when specified.
* Use the specified lubricant, bond, or sealant.
* When removing the battery, disconnect the negative cable first and then the positive cable.
* When reconnecting the battery, connect the positive cable first and then the negative cable, and cover the positive terminal with the terminal cover.
* When performing service to electrical parts, disconnect the battery negative cable unless the service procedure requires the battery power.
* When tightening the cylinder head and crankcase bolts and nuts, tighten the larger sizes first. Always tighten the bolts and nuts diagonally from the inside working out and to the specified tightening torque.
* Whenever you remove oil seals, gaskets, packing, O-rings, self-locking nuts, locking washers, cotter pins, circlips and certain other parts as specified, be sure to replace them with new ones. Also, before installing these new parts, be sure to remove any left over material from the mating surfaces.
* Never reuse a circlip. When installing a new circlip, take care not to expand the end gap larger than required to slip the circlip over the shaft. After installing a circlip, always ensure that it is completely seated in its groove and securely fitted.
* Use a torque wrench to tighten fasteners to the specified torque. Wipe off grease and oil if a thread is smeared with them.
* After reassembling, check parts for tightness and proper operation.

* To protect the environment, do not unlawfully dispose of used motor oil and all other fluids, batteries and tires.
* To protect the earth's natural resources, properly dispose of used motorcycles and parts.

# SUZUKI VL1500W ('98-MODEL)

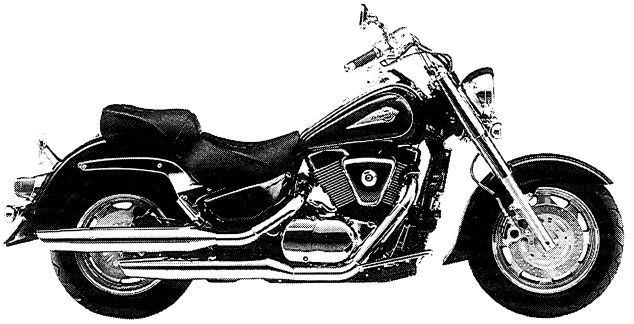

RIGHT SIDE

LEFT SIDE

*Difference between photographs and actual motorcycles depends on the markets.

# SERIAL NUMBER LOCATION

The frame serial number or V.I.N. (Vehicle Identification Number) ① is stamped on the right side of the steering head pipe. The engine serial number ② is located on the rear side of the crankcase. These numbers are required especially for registering the machine and ordering spare parts.

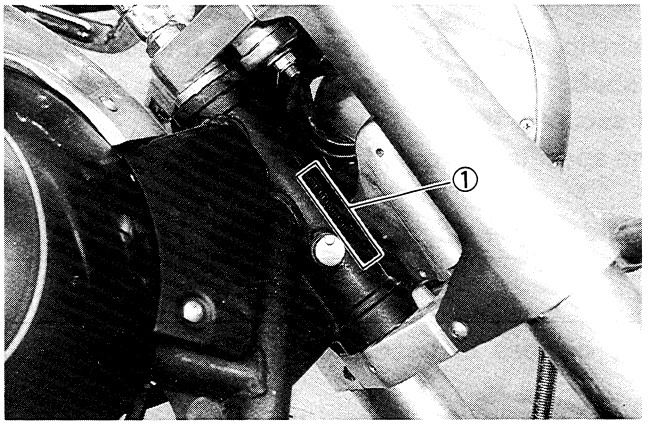


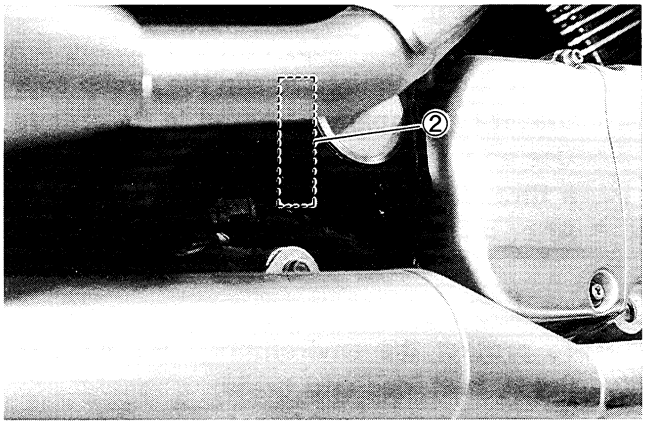


# FUEL AND OIL RECOMMENDATION

## FUEL

Use unleaded gasoline that is graded 85–95 octane or higher (Research Method).

## ENGINE OIL

Use a premium quality 4-stroke motor oil to ensure longer service life of your motorcycle. Use only oils which are rated SF or SG under the API service classification. The recommended viscosity is SAE 10W-40. If SAE 10W-40 (SAE) engine oil is not available, select an alternative according to the chart.

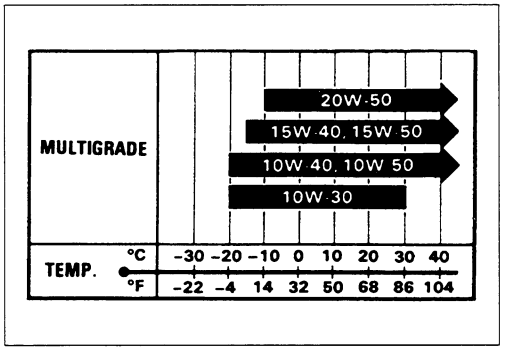

## GEAR OIL (FINAL DRIVE GEAR OIL)

Use SAE 90 hypoid gear oil which is rated GL-5 under API classification system. If you operate the motorcycle where ambient temperature is below 0°C (32°F), use SAE 80 hypoid gear oil.

## BRAKE FLUID

Use DOT 4 brake fluid.

**⚠WARNING**

**This motorcycle uses a glycol-based brake fluid. Do not use or mix different types of brake fluid such as silicone-based and petroleum-based fluids for refilling the system, otherwise serious damage will result to the brake (clutch) system.**
**Never use any brake fluid taken from old, used or unsealed containers.**
**Never re-use brake fluid left over from the last servicing or which has been stored for a long period of time.**

## FRONT FORK OIL

Use SUZUKI FORK OIL SS-08 (#10) or equivalent fork oil.

# BREAK-IN PROCEDURES

During manufacture only the best possible materials are used and all machined parts are finished to a very high standard. It is still necessary to allow the moving parts to "BREAK-IN" before subjecting the engine to maximum stresses. The future performance and reliability of the engine depends on the care and restraint exercised during its early life. The general rules are as follows.

- Keep to these break-in throttle opening limit:

**Break-in throttle operation**
**Initial 800 km ( 500 miles): Less than ½ throttle**
**Up to 1 600 km (1 000 miles): Less than ¾ throttle**

- Upon reaching an odometer reading of 1 600 km (1 000 miles) you can subject the motorcycle to full throttle operation.

# CYLINDER IDENTIFICATION

The engine cylinders are identified as #1 and #2, as counted from rear to front (as viewed by the rider on the seat).

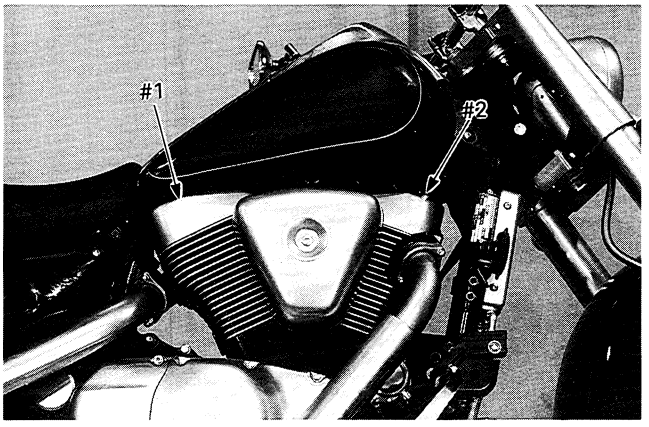

# INFORMATION LABELS

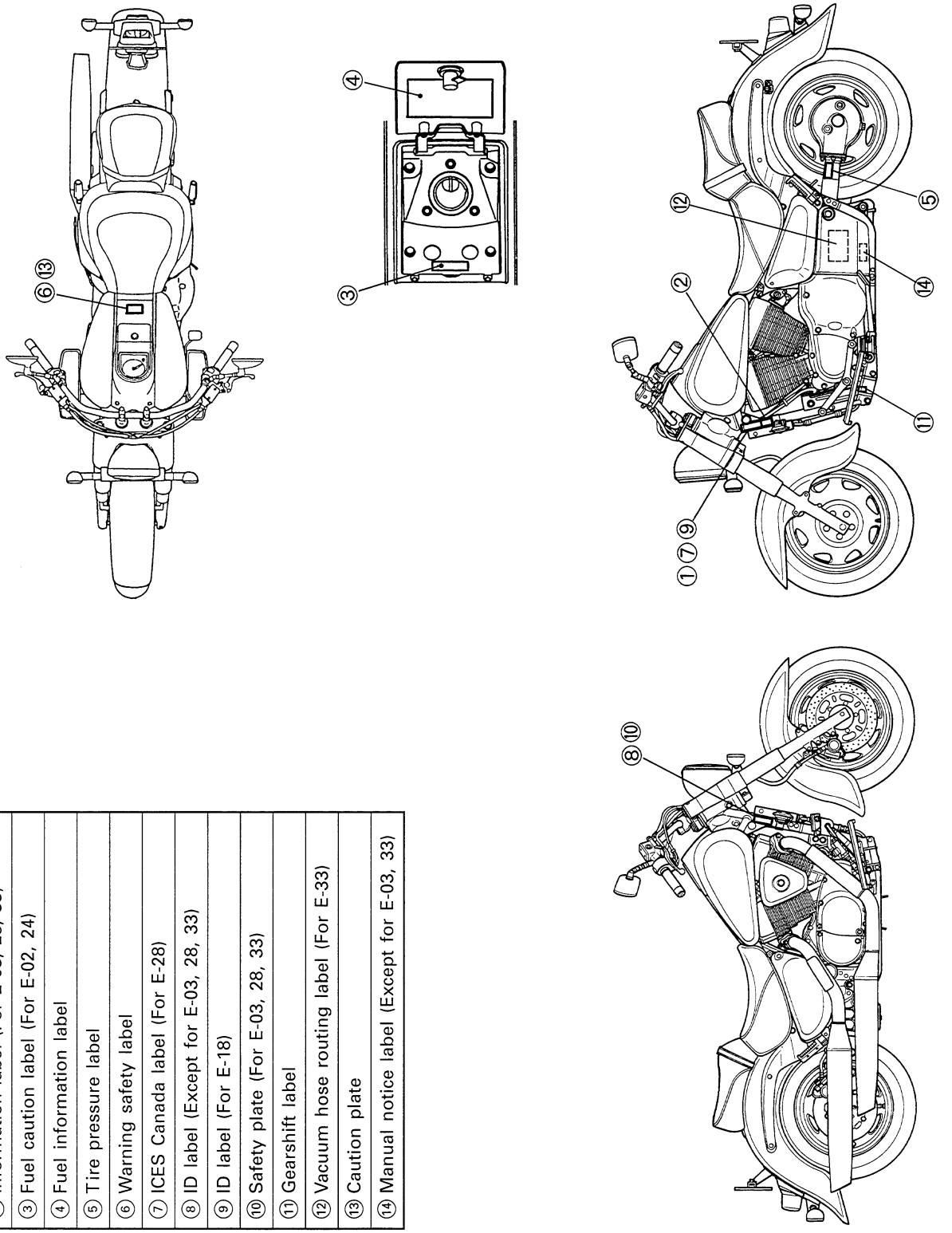


| |
|---|
| ① Noise label (For E-03, 24, 33, 34) |
| ② Information label (For E-03, 28, 33) |
| ③ Fuel caution label (For E-02, 24) |
| ④ Fuel information label |
| ⑤ Tire pressure label |
| ⑥ Warning safety label |
| ⑦ ICES Canada label (For E-28) |
| ⑧ ID label (Except for E-03, 28, 33) |
| ⑨ ID label (For E-18) |
| ⑩ Safety plate (For E-03, 28, 33) |
| ⑪ Gearshift label |
| ⑫ Vacuum hose routing label (For E-33) |
| ⑬ Caution plate |
| ⑭ Manual notice label (Except for E-03, 33) |

# SPECIFICATIONS

## DIMENSIONS AND DRY MASS

| | |
|---|---|
| Overall length | 2 525 mm (99.4 in) |
| Overall width | 965 mm (38.0 in) |
| Overall height | 1 165 mm (45.9 in) |
| Wheelbase | 1 700 mm (66.9 in) |
| Ground clearance | 145 mm (5.7 in) |
| Seat height | 700 mm (27.6 in) |
| Dry mass | 296 kg (652 lbs) |

## ENGINE

| | |
|---|---|
| Type | Four-stroke, Air-cooled with SACS, 3 valves, OHC, 45-degree V-twin |
| Number of cylinders | 2 |
| Bore | 96 mm (3.780 in) |
| Stroke | 101 mm (3.976 in) |
| Displacement | 1 462 $cm^3$ (89.2 cu. in) |
| Compression ratio | 8.5 : 1 |
| Carburetor | MIKUNI BDSR36, Twin |
| Air cleaner | Non-woven fabric element |
| Starter system | Electric starter |
| Lubrication system | Wet sump |

## TRANSMISSION

| | |
|---|---|
| Clutch | Wet multi-plate type |
| Transmission | 5-speed constant mesh |
| Gearshift pattern | 1-down, 4-up |
| Primary reduction ratio | 1.490 (76/51) |
| Secondary reduction ratio | 0.852 (29/34) |
| Final reduction ratio | 2.666 (19/19 × 32/12) |
| Gear ratios, Low | 3.000 (36/12) |
| 2nd | 1.823 (31/17) |
| 3rd | 1.333 (28/21) |
| 4th | 1.041 (25/24) |
| Top | 0.884 (23/26) |
| Drive system | Shaft drive |

## CHASSIS

| | |
|---|---|
| Front suspension | Telescopic, coil spring, oil damped. |
| Rear suspension | Link type, gas/coil spring, oil damped, spring pre-load fully adjustable |
| Steering angle | 39° (right & left) |
| Caster | 32° |
| Trail | 138 mm (5.43 in) |
| Turning radius | 3.1 m (10.2 ft) |
| Front brake | Disc brake |
| Rear brake | Disc brake |
| Front tire size | 150/80-16 71H, tubeless |
| Rear tire size | 180/70-15 M/C 76, tubeless |
| Front fork stroke | 140 mm (5.5 in) |
| Rear wheel travel | 118 mm (4.6 in) |

## ELECTRICAL

| | |
|---|---|
| Ignition type | Electronic ignition (Transistorized) |
| Ignition timing | 2° B.T.D.C. at 1 000 r/min |
| Spark plug | NGK: DPR7EA-9 or DENSO: X22EPR-U9 |
| Battery | 12V 50.4 kC (14 Ah)/10HR |
| Generator | Three-phase A.C. Generator |
| Fuse | 30/15/15/15/10/10A |
| Headlight | 12V 60/55W |
| Position light | 12V 4W ..... Except for E-03,24,28,33 |
| Front turn signal light | 12V 21/5W ..... E-03,28,33<br>12V 21W ..... Others |
| Rear turn signal light | 12V 21W |
| Brake light/Taillight | 12V 21/5W |
| Speedometer light | 12V 1.7W |
| Fuel level gauge light | 12V 1.7W |
| Neutral indicator light | 12V 1.7W |
| High beam indicator light | 12V 1.7W |
| Turn signal indicator light | 12V 1.7W |
| Oil pressure indicator light | LED |

## CAPACITIES

| | |
|---|---|
| Fuel tank, including reserve | 15.5 L (4.1/3.4 US/Imp gal) |
| Engine oil, oil change | 3 700 ml (3.9/3.3 US/Imp qt) |
| with filter change | 4 300 ml (4.5/3.8 US/Imp qt) |
| overhaul | 5 000 ml (5.3/4.4 US/Imp qt) |
| Final gear oil | 200–220 ml (6.8/7.0–7.4/7.7 US/Imp oz) |
| Front fork oil (each leg) | 439 ml (14.8/15.5 US/Imp oz) |

These specifications are subject to change without notice.

# COUNTRY AND AREA CODES

The following codes stand for the applicable country(-ies) and area(-s).

| CODE | COUNTRY or AREA |
|---|---|
| E-02 | U.K. |
| E-03 | U.S.A. (Except California) |
| E-04 | France |
| E-17 | Sweden, Finland (E-15), Norway (E-16) |
| E-18 | Switzerland, Austria (E-39) |
| E-22 | Germany |
| E-24 | Australia |
| E-25 | Netherlands |
| E-28 | Canada |
| E-33 | California |
| E-34 | Italy, Belgium (E-21), Spain (E-53) |

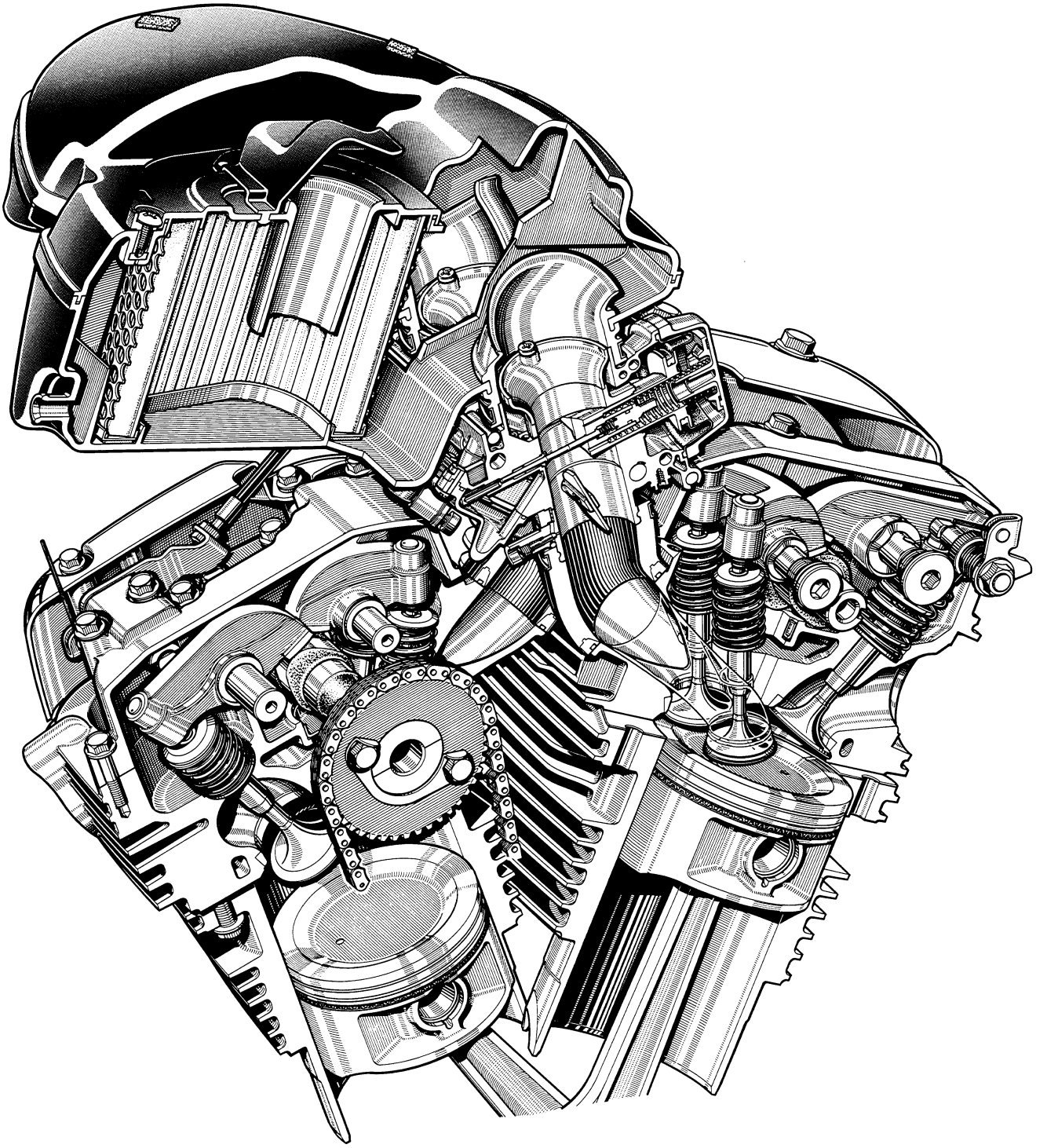

# PERIODIC MAINTENANCE

2

CONTENTS


PERIODIC MAINTENANCE SCHEDULE ..... 2- 1
PERIODIC MAINTENANCE CHART ..... 2- 1
LUBRICATION POINTS ..... 2- 2
MAINTENANCE AND TUNE-UP PROCEDURES ..... 2- 3
SPARK PLUGS ..... 2- 3
AIR CLEANER ..... 2- 4
ENGINE OIL AND OIL FILTER ..... 2- 6
FUEL HOSE ..... 2- 7
FUEL STRAINER ..... 2- 8
ENGINE IDLE SPEED ..... 2- 8
AUTOMATIC DE-COMPRESSION CABLE ..... 2- 8
THROTTLE CABLE PLAY ..... 2-10
CARBURETOR SYNCHRONIZATION ..... 2-10
CLUTCH ..... 2-11
BRAKES ..... 2-12
FINAL GEAR OIL ..... 2-14
TIRES ..... 2-14
STEERING ..... 2-15
FRONT FORK ..... 2-15
REAR SUSPENSION ..... 2-16
EXHAUST PIPE BOLTS AND MUFFLER BOLTS ..... 2-16
CHASSIS BOLTS AND NUTS ..... 2-17
COMPRESSION PRESSURE CHECK ..... 2-19
OIL PRESSURE CHECK ..... 2-20

# PERIODIC MAINTENANCE SCHEDULE

The chart below lists the recommended intervals for all the required periodic service work necessary to keep the motorcycle operating at peak performance and economy. Maintenance intervals are expressed in terms of kilometers, miles and months, and are dependant on whichever comes first.

*NOTE:*
*More frequent servicing may be performed on motorcycles that are used under severe conditions.*

## PERIODIC MAINTENANCE CHART

| Interval / Item | km | 1 000 | 6 000 | 12 000 | 18 000 | 24 000 |
|---|---|---|---|---|---|---|
| | miles | 600 | 4 000 | 7 500 | 11 000 | 15 000 |
| | months | 1 | 6 | 12 | 18 | 24 |
| Spark plugs | | – | I | R | I | R |
| Air cleaner | | – | I | I | R | I |
| Engine oil | | R | R | R | R | R |
| Engine oil filter | | R | – | – | R | – |
| Fuel hose | | – | I | I | I | I |
| | | Replace every 4 years. | | | | |
| Fuel strainer | | – | – | I | – | I |
| Engine idle speed | | I | I | I | I | I |
| Automatic de-compression cable | | I | I | I | I | I |
| Throttle cable play | | I | I | I | I | I |
| Carburetor synchronization | | – | – | I | – | I |
| Clutch hose | | – | I | I | I | I |
| | | Replace every 4 years. | | | | |
| Clutch fluid | | – | I | I | I | I |
| | | Replace every 2 years. | | | | |
| Brakes | | I | I | I | I | I |
| Brake hose | | – | I | I | I | I |
| | | Replace every 4 years. | | | | |
| Brake fluid | | – | I | I | I | I |
| | | Replace every 2 years. | | | | |
| Final gear oil | | R | – | I | – | I |
| Tires | | – | I | I | I | I |
| Steering | | I | – | I | – | I |
| Front forks | | – | – | I | – | I |
| Rear suspension | | – | – | I | – | I |
| Exhaust pipe bolts and muffler bolts | | T | – | T | – | T |
| Chassis bolts and nuts | | T | T | T | T | T |

*NOTE: I=Inspect and clean, adjust, replace or lubricate as necessary;*
*R=Replace; T=Tighten*

## LUBRICATION POINTS

Proper lubrication is important for smooth operation and long life of each working part of the motorcycle.

Major lubrication points are indicated below.

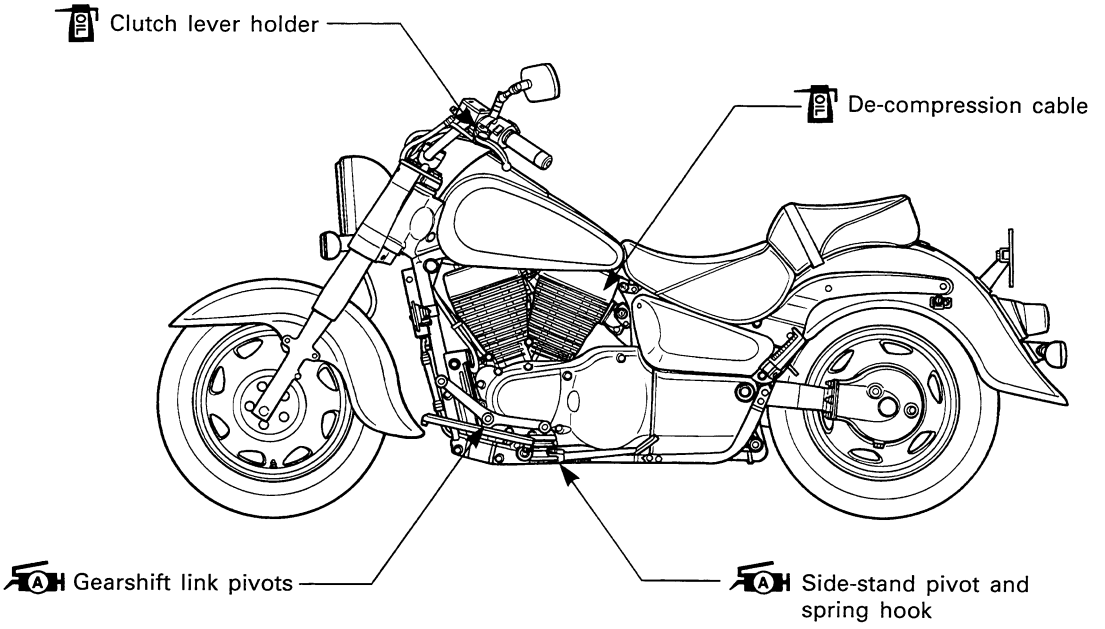


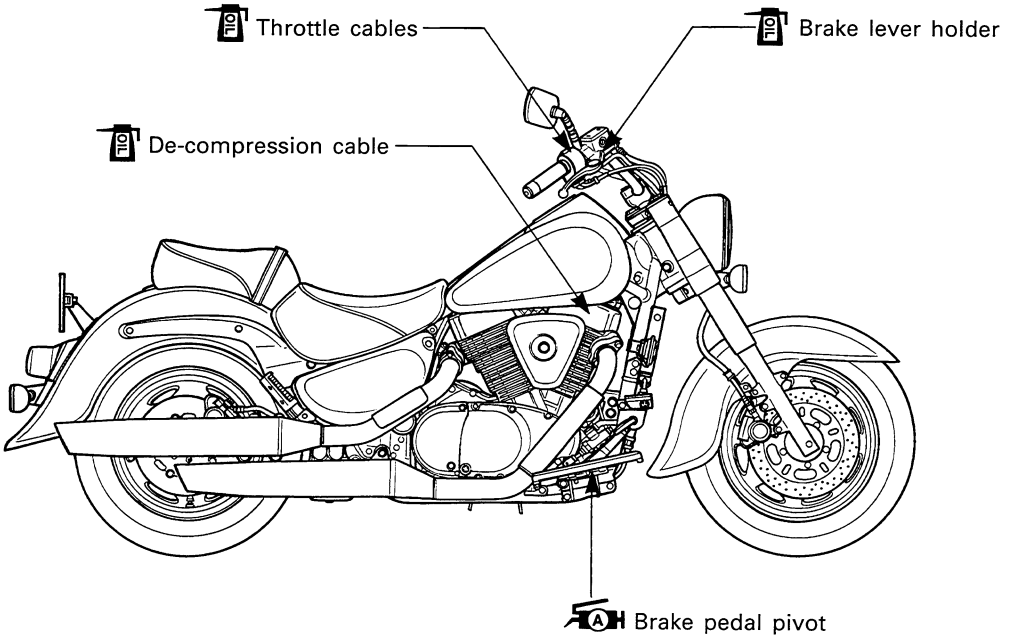


*NOTE:*

* *Before lubricating each part, clean off any rusty spots and wipe off any grease, oil, dirt or grime.*
* *Lubricate exposed parts which are subject to rust, with a rust preventative spray, especially whenever the motorcycle has been operated under wet or rainy conditions.*

# MAINTENANCE AND TUNE-UP PROCEDURES

This section describes the servicing procedures for each item mentioned in the Periodic Maintenance chart.

## SPARK PLUGS

**Inspect every 6 000 km (4 000 miles, 6 months) and replace every 12 000 km (7 500 miles, 12 months).**

- Remove the frame head covers ①. (See p. 6-3.)
- Remove the upper covers ②. (See p. 6-3.)

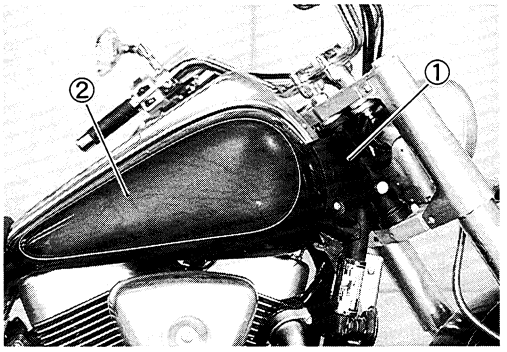


- Remove the cylinder head side caps ③.

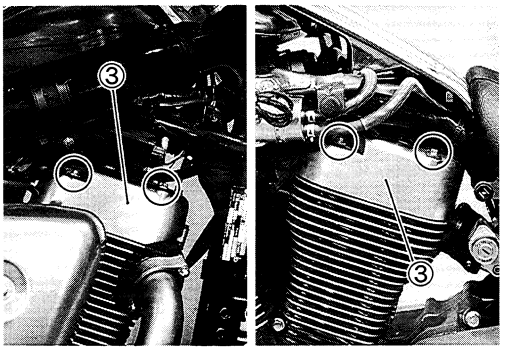


- Remove the spark plug caps ④.
- Remove the spark plugs with the spark plug wrench.

**TOOL 09930-10121: Spark plug wrench set**

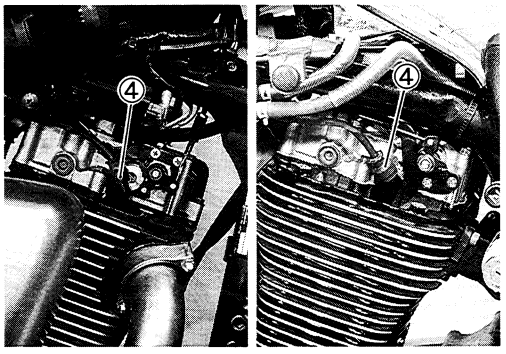


### HEAT RANGE

- Check to see the heat range of the plug.

| | NGK | DENSO |
|---|---|---|
| Standard | DPR7EA-9 | X22EPR-U9 |
| Colder type | DPR8EA-9<br>DPR9EA-9 | X24EPR-U9<br>X27EPR-U9 |

*NOTE:*
*"R" type spark plug has a resistor located at the center electrode to prevent radio noise.*

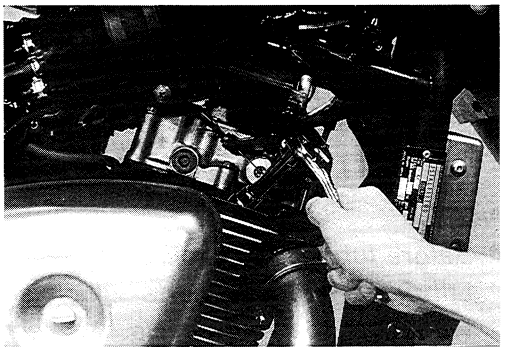

### CARBON DEPOSITS

Check to see if there are carbon deposits on the spark plug. If carbon is deposited, remove it using a spark plug cleaner machine or carefully using a tool with a pointed end.

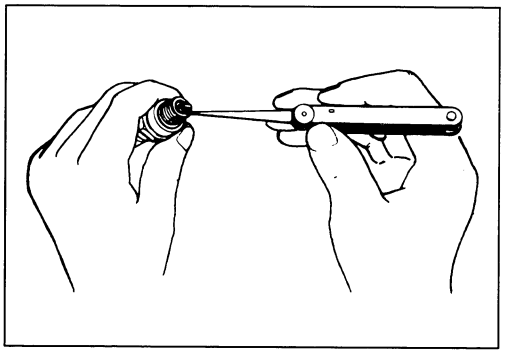

### SPARK PLUG GAP

Measure the spark plug gap using a thickness gauge. If out of specification, regap the spark plug.

**Standard**

**Spark plug gap: 0.8–0.9 mm (0.031–0.035 in)**

**TOOL 09900-20803: Thickness gauge**

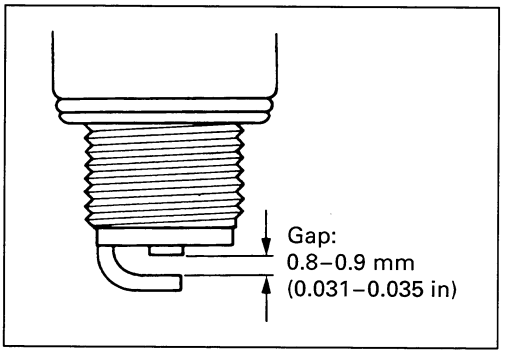


### ELECTRODE'S CONDITION

Check the condition of the electrode.
If it is extremely worn or burnt, replace the spark plug. Replace the spark plug if it has a broken insulator, damaged thread, etc.

**⚠ CAUTION**

**Confirm the thread size and reach when replacing the spark plug. If the reach is too short, carbon will be deposited on the screw portion of the spark plug hole and engine damage may result.**

### SPARK PLUG AND PLUG CAP INSTALLATION

**⚠ CAUTION**

**Before using a spark plug wrench, carefully turn the spark plug by finger into the threads of the cylinder head to prevent damage the aluminum threads.**

- Install the spark plugs to the cylinder heads by finger tight, and then tighten them to the specified torque.

**Spark plug: 18 N·m (1.8 kg-m, 13.0 lb-ft)**

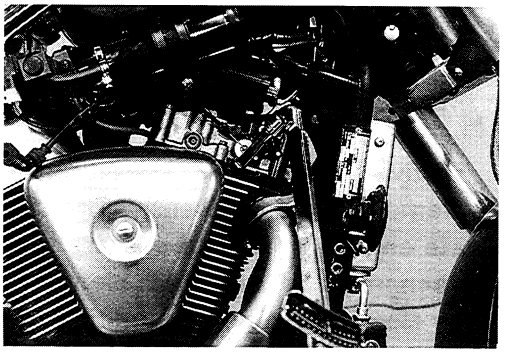

## AIR CLEANER

**Inspect every 6 000 km (4 000 miles, 6 months) and replace every 18 000 km (11 000 miles, 18 months).**

- Remove the seat ①. (See p. 6-2.)
- Remove the meter and fuel inlet cover ②. (See pp. 6-3 and -4.)

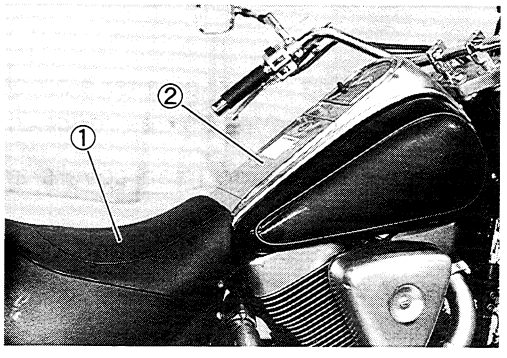

- Remove the screws ①.

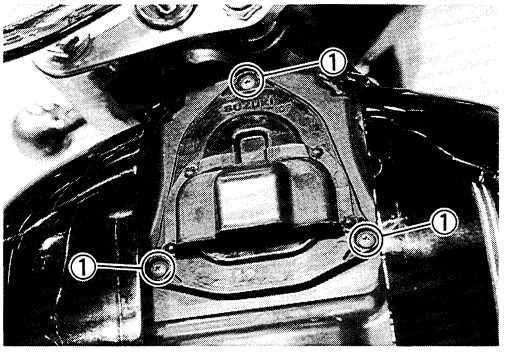


- Remove the air cleaner element ②.

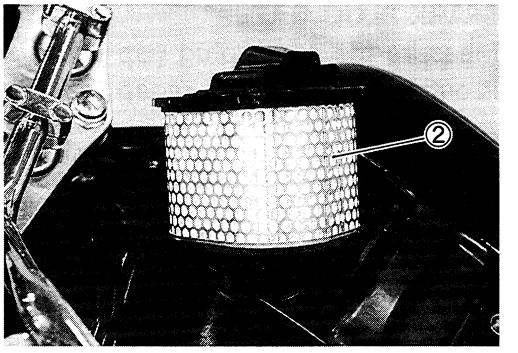


- Carefully use compressed air to clean the air cleaner element.

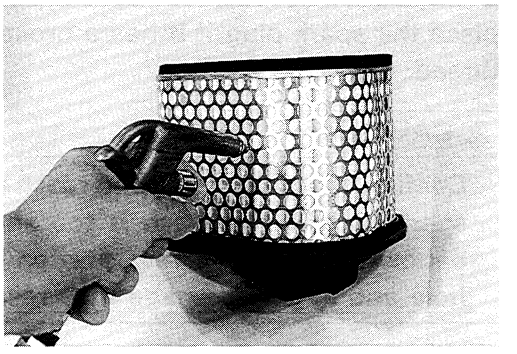

**⚠ CAUTION**

**Always apply compressed air to the outside of the air cleaner element. If compressed air is applied to the inside, dirt will be forced into the pores of the air cleaner element, restricting air flow through the air cleaner element.**

- Reinstall the cleaned or new air cleaner element in the reverse order of removal.

**⚠ CAUTION**

**If driving under dusty conditions, clean the air cleaner element more frequently. The surest way to accelerate engine wear is to operate the engine without the element or to use a torn element. Make sure that the air cleaner is in good condition at all times. Life of the engine depends largely on this component!**

*NOTE:*
*When cleaning the air cleaner element, drain out any water from the air cleaner box as following procedure.*

- Remove the frame head covers and upper covers. (See p. 6-3.)
- Remove the drain plugs and drain out any water from the air cleaner box.

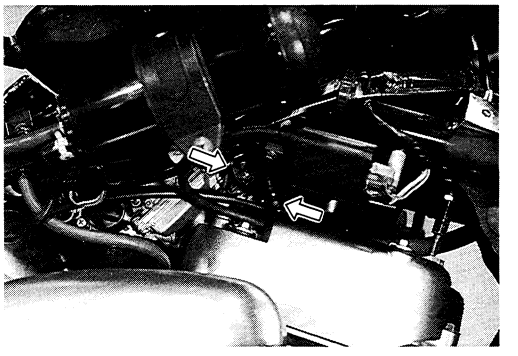

# ENGINE OIL AND OIL FILTER

**(ENGINE OIL)**
**Replace initially at 1 000 km (600 miles, 1 month) and every 6 000 km (4 000 miles, 6 months) thereafter.**

**(OIL FILTER)**
**Replace initially at 1 000 km (600 miles, 1 month) and every 18 000 km (11 000 miles, 18 months) thereafter.**

The oil should be changed while the engine is warm. Oil filter replacement at the above intervals, should be done together with the engine oil change.

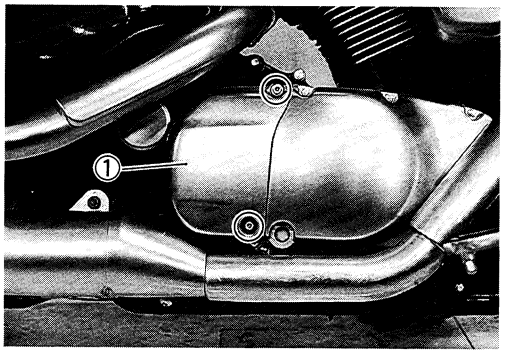


### ENGINE OIL REPLACEMENT

- Remove the rear clutch cover ①.
- Keep the motorcycle upright.
- Place an oil pan below the engine, and drain oil by removing the oil drain plug ② and filler cap ③.

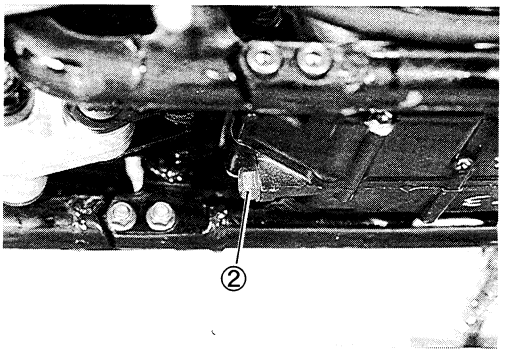


- Tighten the oil drain plug ② to the specified torque, and pour new oil through the oil filler. When performing an oil change (without filter replacement), the engine will hold about 3.7 L (3.9/3.3 US/Imp qt) of oil. Use SF or SG classified (API) engine oil with a viscosity rating of 10W/40 (SAE).

**Oil drain plug: 21 N·m (2.1 kg-m, 15.0 lb-ft)**

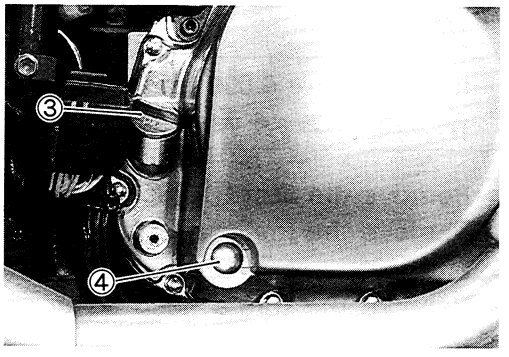


- Start up the engine and allow it to run for several seconds at idling speed.
- Turn off the engine and wait about one minute, then check the oil level through the inspection window ④. If the level is below the "L" mark, add oil to "F" level. If the level is above the "F" mark, drain oil to "F" level.
- Install the rear clutch cover.

### OIL FILTER REPLACEMENT

- Drain the engine oil as described in the engine oil replacement procedure.
- Remove the oil filter ⑤ by using the special tool.

**TOOL 09915-40610: Oil filter wrench**

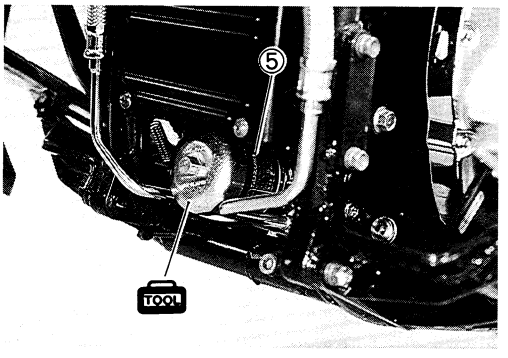

- Apply engine oil lightly to the gasket of the new oil filter, before installation.
- Install the new oil filter. Turn it by hand until you feel that the oil filter gasket has contacted the oil filter mounting surface. Then, tighten the oil filter two full turns using the special tool.

**TOOL 09915-40610: Oil filter wrench**

*NOTE:*
*To properly tighten the oil filter, use the special tool. Never tighten the oil filter by hand.*

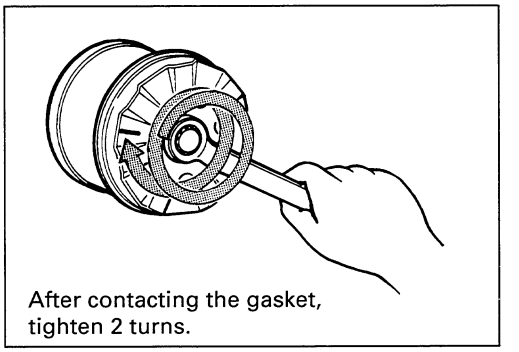
After contacting the gasket, tighten 2 turns.

- Add new engine oil and check the oil level as described in the engine oil replacement procedure.

**NECESSARY AMOUNT OF ENGINE OIL**
**Oil change: 3.7 L (3.9/3.3 US/Imp qt)**
**Filter change: 4.3 L (4.5/3.8 US/Imp qt)**
**Overhaul engine: 5.0 L (5.3/4.4 US/Imp qt)**

**⚠ CAUTION**

**ONLY USE A GENUINE SUZUKI MOTORCYCLE OIL FILTER.**
**Other manufacturer's oil filters may differ in thread specifications (thread diameter and pitch), filtering performance and durability which may lead to engine damage or oil leaks. Also, do not use a genuine Suzuki automobile oil filter on this motorcycle.**

## FUEL HOSE

**Inspect every 6 000 km (4 000 miles, 6 months).**
**Replace every 4 years.**

- Remove the seat ①. (See p. 6-2.)
- Remove the meter and fuel inlet cover ②. (See pp. 6-3 and -4.)
- Remove the frame head cover ③ and upper cover ④. (See p. 6-3.)

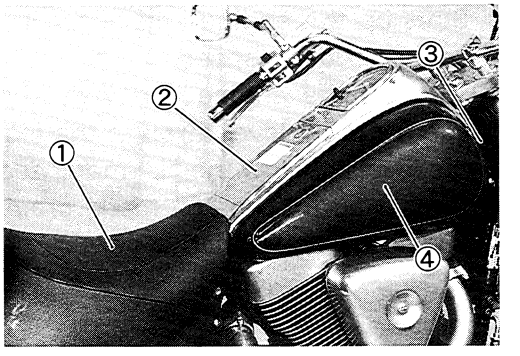


Inspect the fuel hoses ⑤ for damage and fuel leakage. If any defects are found, the fuel hoses must be replaced.

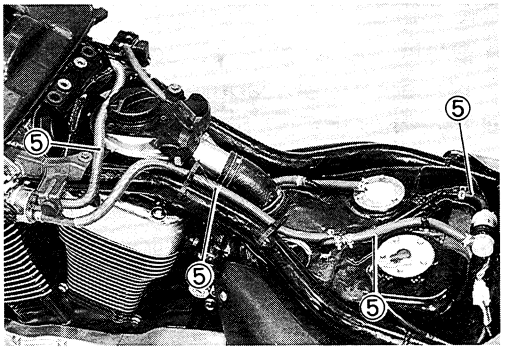

## FUEL STRAINER

**Inspect every 12 000 km (7 500 miles, 12 months).**

(See pp. 5-5 and -6.)

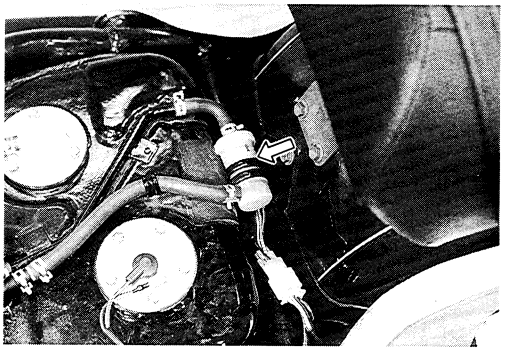

## ENGINE IDLE SPEED

**Inspect initially at 1 000 km (600 miles, 1 month) and every 6 000 km (4 000 miles, 6 months) thereafter.**

*NOTE:*
*Make this adjustment when the engine is hot.*

- Start up the engine, turn the throttle stop screw and set the engine idle speed as follows

**Engine idle speed: 1 000±50 r/min ..... E-18**
**1 000±100 r/min ..... Others**

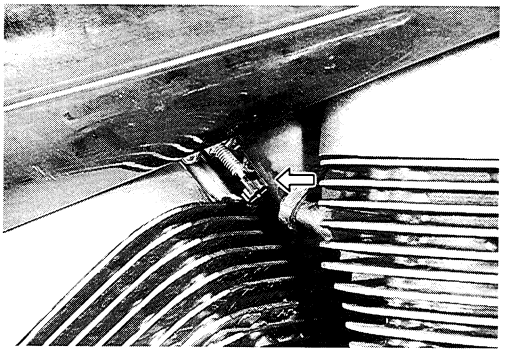

## AUTOMATIC DE-COMPRESSION CABLE

**Inspect initially at 1 000 km (600 miles, 1 month) and every 6 000 km (4 000 miles, 6 months).**

Incorrect adjustment of the cable slack may result in starting difficulties or engine damage. Check the cable slacks and if necessary, adjust as follows:

- Remove the seat ①. (See p. 6-2.)
- Remove the meter and fuel inlet cover ②. (See pp. 6-3 and -4.)
- Remove the frame head covers ③ and upper covers ④. (See p. 6-3.)
- Remove the cylinder head side caps ⑤.

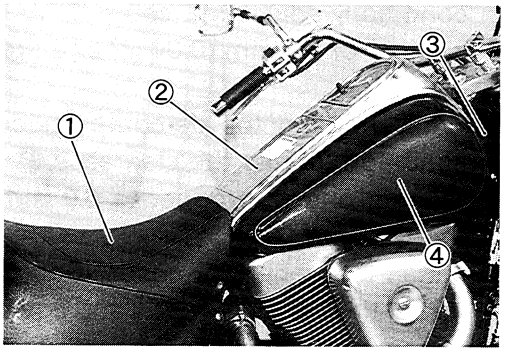


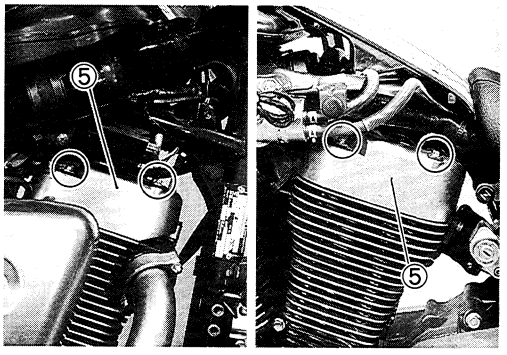


- Remove the air cleaner box ⑥. (See p. 5-16.)

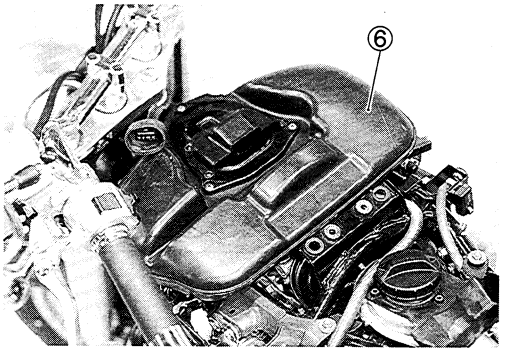

*NOTE:*
*The automatic de-compression cables must be checked and adjusted when the front cylinder is at the T.D.C. (Top Dead Center) of compression stroke.*

- To set the front cylinder at the T.D.C. of compression stroke, remove the generator cover. (See p. 3D-1.)
- Turn the crankshaft counterclockwise and align "F | T" line Ⓐ on the generator rotor with the aligning mark Ⓑ of the crankcase.
- Loosen the lock nuts ①, ③ and adjuster ④ to make each cable ⑤ have an enough free play.
- Turn the front and rear de-compression levers counterclockwise by hand until feeling the contact with the exhaust rocker arms.

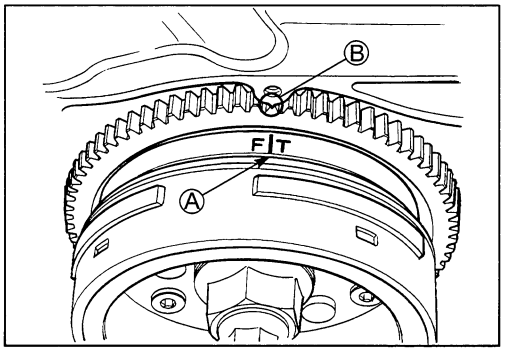


*NOTE:*
*When the front de-compression lever turns fully, the front cylinder is at the T.D.C. of exhaust stroke.*
*Turn the crankshaft 360° (1 turn).*

- While holding the de-compression levers at the above condition, adjust the cable ⑤ to obtain its inner cable slack Ⓒ of 1.0 mm (0.04 in) and tighten the lock nuts (①, ②).
- While holding the de-compression levers at the above condition, adjust the clearance Ⓓ between the solenoid plunger and its stopper to 6.0 mm (0.24 in) and tighten the lock nut ③.
- Install the generator cover. (See pp. 3D-6 to -8.)
- Install the air cleaner box and covers in the reverse order of removal.

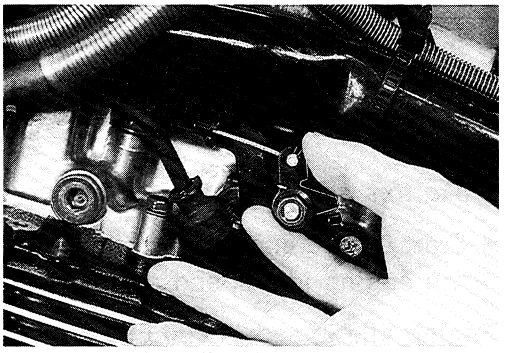

No.1 (Rear) cylinder

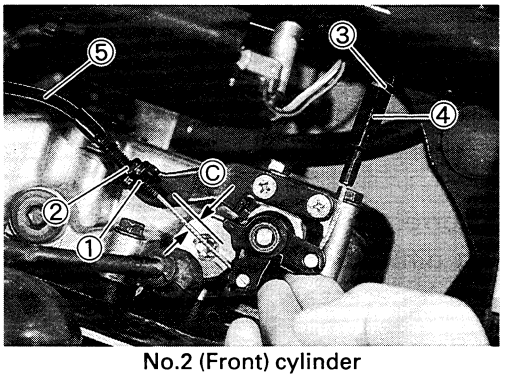


No.2 (Front) cylinder

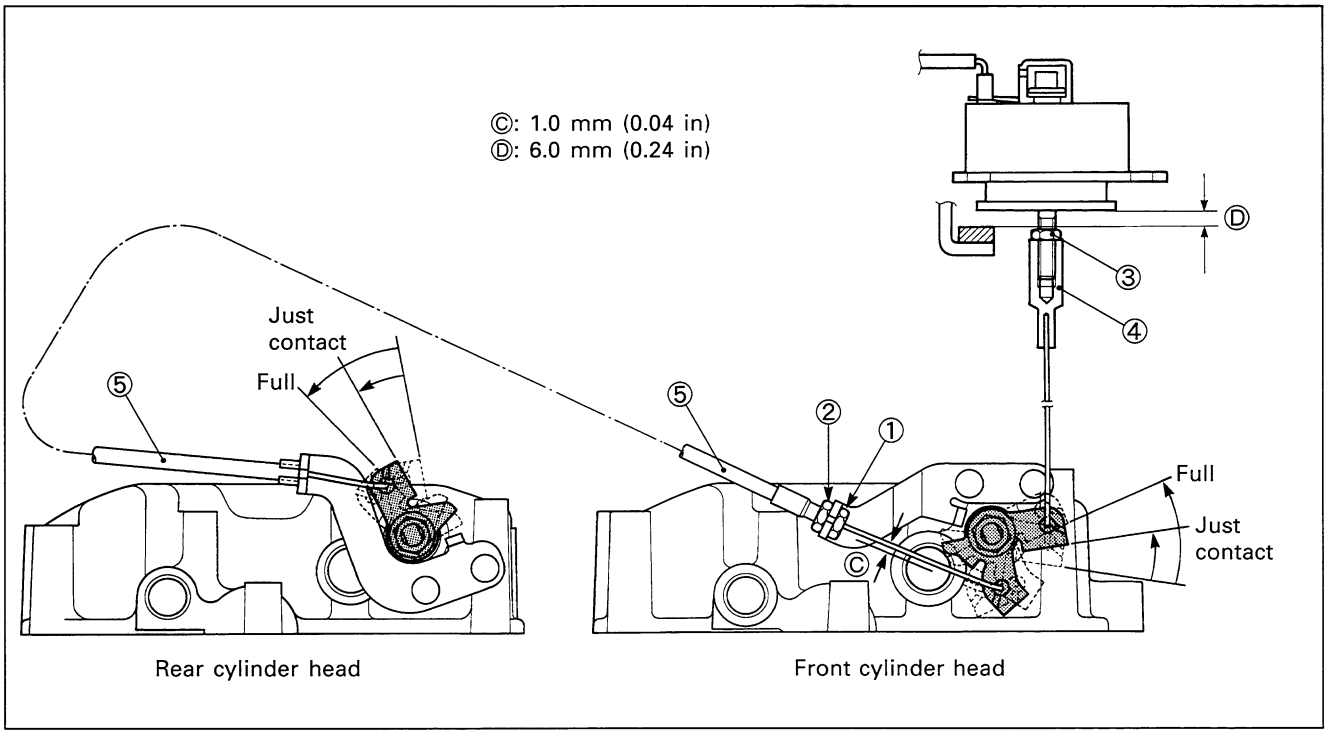

## THROTTLE CABLE PLAY

**Inspect initially at 1 000 km (600 miles, 1 month) and every 6 000 km (4 000 miles, 6 months) thereafter.**

Adjust the throttle cable play Ⓐ as follows.

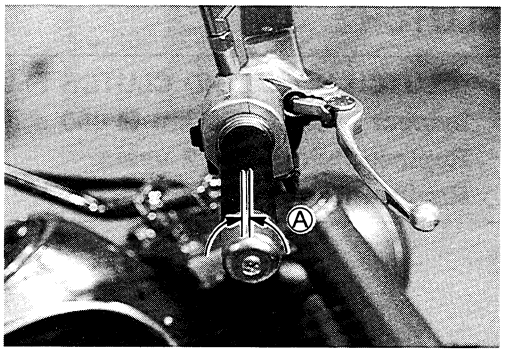


1st step:
- Loosen the lock nut ③ of the throttle returning cable ① and fully turn in the adjuster ④.

2nd step:
- Loosen the lock nut ⑤ of the throttle pulling cable ②.
- Turn the adjuster ⑥ in or out until the throttle cable play (at the throttle grip) Ⓐ is between 2.0–4.0 mm (0.08–0.16 in).
- Tighten the lock nut ⑤ while holding the adjuster ⑥.

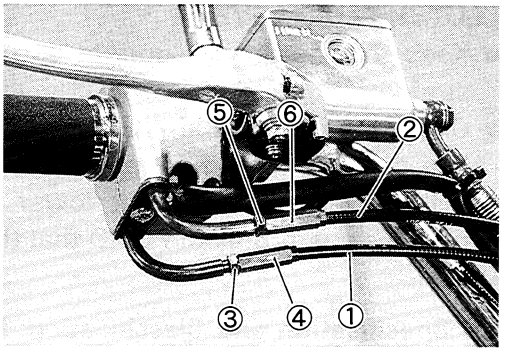


3rd step:
- While holding the throttle grip at the fully closed position, slowly turn out the adjuster ④ of the throttle returning cable ① until resistance is felt.
- Tighten the lock nut ③ while holding the adjuster ④.

**Throttle cable play Ⓐ: 2.0–4.0 mm (0.08–0.16 in)**

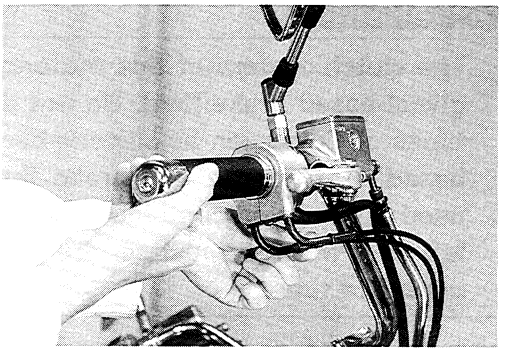

**⚠ WARNING**

**After the adjustment is completed, check that handlebar movement does not raise the engine idle speed and that the throttle grip returns smoothly and automatically.**

*NOTE:*
*Major adjustment can be made by the carburetor side adjuster.*

## CARBURETOR SYNCHRONIZATION

**Inspect every 12 000 km (7 500 miles, 12 months).**

(See pp. 5-27 to -29.)

# CLUTCH

**(CLUTCH HOSE AND CLUTCH FLUID)**
**Inspect every 6 000 km (4 000 miles, 6 months).**
**Replace fluid every 2 years.**
**Replace hose every 4 years.**

## CLUTCH FLUID LEVEL

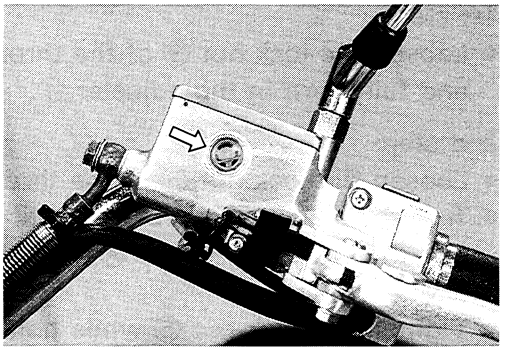

- Keep the motorcycle upright and place the handlebars straight.
- Check the clutch fluid level by observing the lower limit line on the clutch fluid reservoir.
- If the level is found to be lower than the lower mark, replenish with BRAKE FLUID that the following specification.

**BF Specification and Classification: DOT 4**

**WARNING**

**The clutch system of this motorcycle is filled with a glycol-based brake fluid. Do not use or mix different types of fluid such as silicone-based and petroleum-based. Do not use any brake fluid taken from old, used or unsealed containers. Never re-use brake fluid left over from the last servicing or stored for a long period of time.**

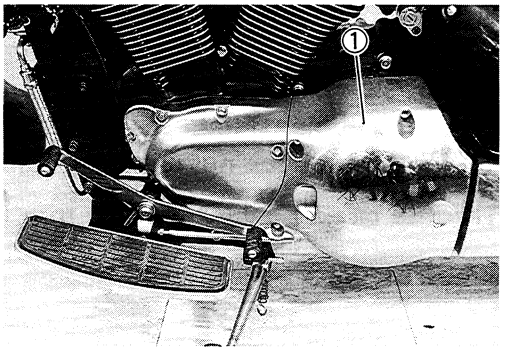


## AIR BLEEDING THE BRAKE FLUID CIRCUIT

The clutch fluid circuit may be purged of air in the following manner.

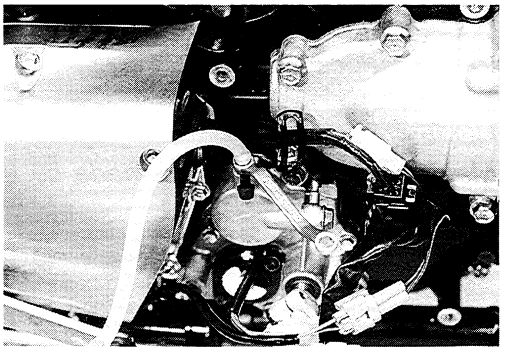

- Remove the secondary gear case cover ①. (See p. 3-7.)
- Keep the motorcycle upright and place the handlebars straight.
- Fill the master cylinder reservoir to the top of the inspection window. Replace the reservoir cap to prevent entry of dirt.
- Attach a hose to the air bleeder valve, and insert the free end of the hose into a receptacle.
- Squeeze and release the clutch lever several times in rapid succession, and squeeze the lever fully without releasing it. Loosen the air bleeder valve by turning it a quarter of a turn so that the brake fluid runs into the receptacle, this will remove the tension of the clutch lever causing it to touch the handlebar grip. Then, close the air bleeder valve, pump and squeeze the lever, and open the valve. Repeat this process until the fluid flowing into the receptacle no longer contains air bubbles.

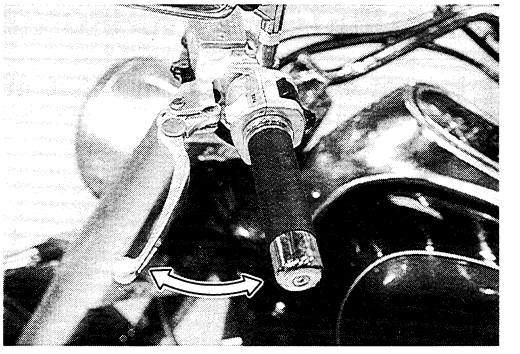

## BRAKE

**(BRAKE)**
**Inspect initially at 1 000 km (600 miles, 1 month) and every 6 000 km (4 000 miles, 6 months) thereafter.**

**(BRAKE HOSE AND BRAKE FLUID)**
**Inspect every 6 000 km (4 000 miles, 6 months). Replace hoses every 4 years. Replace fluid every 2 years.**

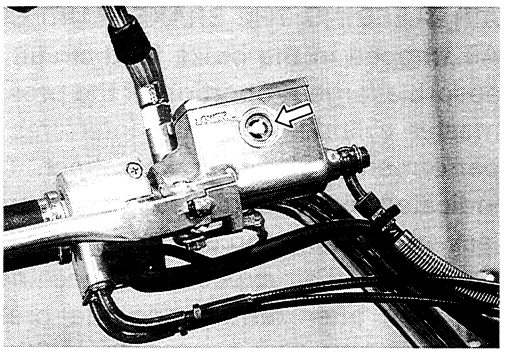

### BRAKE FLUID LEVEL CHECK

- Keep the motorcycle upright and place the handlebars straight.
- Check the brake fluid level by observing the lower limit line on the front and rear brake fluid reservoirs.
- When the brake fluid level is below the lower limit line, replenish with brake fluid that meets the following specification.

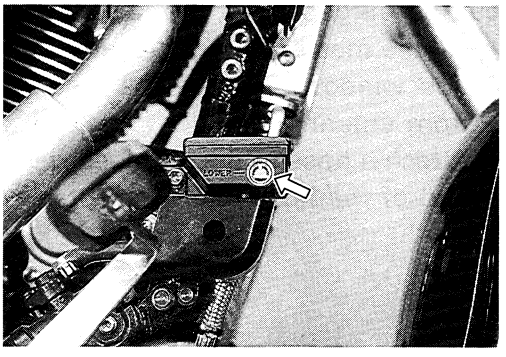

**Specification and Classification: DOT 4**

**⚠ WARNING**

**The brake system of this motorcycle is filled with a glycol-based brake fluid. Do not use or mix different types of fluid such as silicone-based or petroleum-based fluids. Do not use any brake fluid taken from old, used or unsealed containers. Never re-use brake fluid left over from the last servicing or stored for a long period of time.**

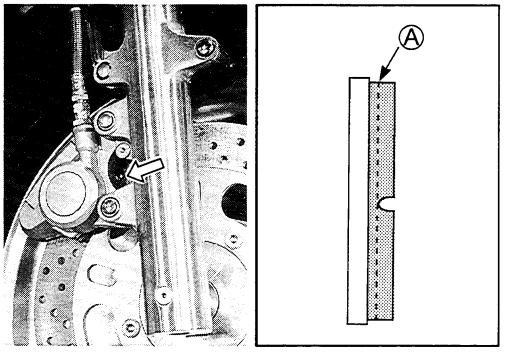


**⚠ WARNING**

**Brake fluid, if it leaks, will interfere with safe running and immediately discolor painted surfaces. Check the brake hoses and hose joints for cracks and oil leakage before riding.**

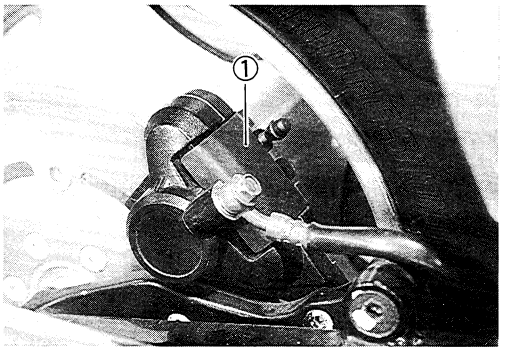


### BRAKE PADS

The extent of brake pad wear can be checked by observing the grooved limit line Ⓐ on the pad. When the wear exceeds the grooved limit line, replace the pads with new ones. (See pp. 6-44 and -52.)

**⚠ CAUTION**

**Replace the brake pads as a set, otherwise braking performance will be adversely affected.**

*NOTE:*
*When checking the rear brake pad, remove the cover ①.*

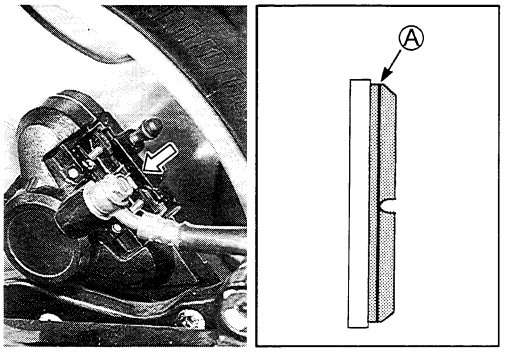

## AIR BLEEDING THE BRAKE FLUID CIRCUIT

Air trapped in the brake fluid circuit acts like a cushion to absorb a large proportion of the pressure developed by the master cylinder and thus interferes with the full braking performance of the brake caliper. The presence of air is indicated by "sponginess" of the brake lever and also by lack of braking force. Considering the danger to which such trapped air exposes the machine and rider, it is essential that, after remounting the brake and restoring the brake system to the normal condition, the brake fluid circuit be purged of air in the following manner:

- Fill the master cylinder reservoir to the top of the inspection window. Replace the reservoir cap to prevent dirt from entering.
- Attach a hose to the air bleeder valve, and insert the free end of the hose into a receptacle.

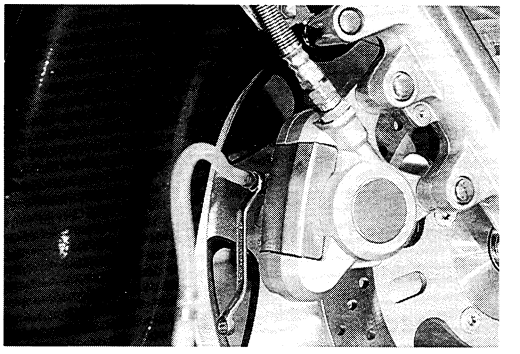

- Front brake: Bleed the air from the brake system.
- Squeeze and release the brake lever several times in rapid succession and squeeze the lever fully without releasing it. Loosen the air bleeder valve by turning it a quarter of a turn so that the brake fluid runs into the receptacle, this will remove the tension of the brake lever causing it to touch the handlebar grip. Then, close the air bleeder valve, pump and squeeze the lever, and open the valve. Repeat this process until the fluid flowing into the receptacle no longer contains air bubbles.

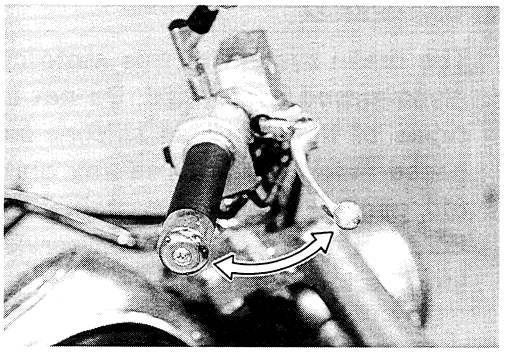

*NOTE:*
*While bleeding the brake system, replenish the brake fluid in the reservoir as necessary. Make sure that there is always some fluid visible in the reservoir.*

- Close the bleeder valve, and disconnect the hose. Fill the reservoir with brake fluid to the top of the inspection window.

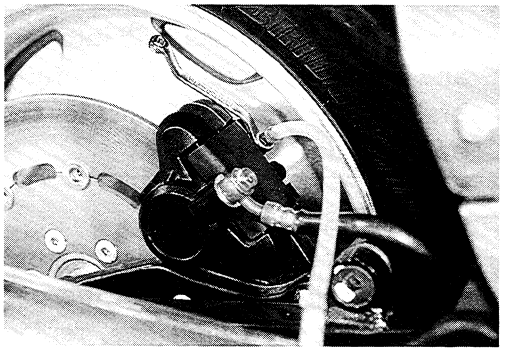

**Air bleeder valve: 7.5 N·m (0.75 kg-m, 5.5 lb-ft)**

**⚠ CAUTION**

**Handle brake fluid with care: the fluid reacts chemically with paint, plastics, rubber materials, etc.**

- Rear brake: The only difference between bleeding the front and rear brakes is that the rear master cylinder is actuated by a pedal.

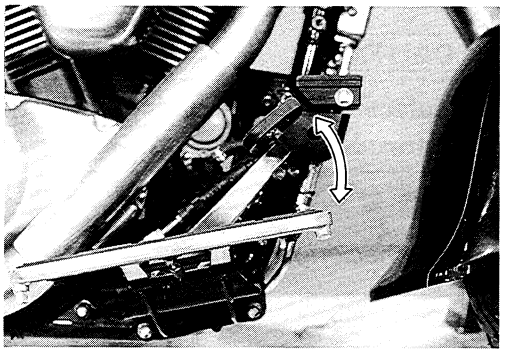

**BRAKE PEDAL HEIGHT**

- Loosen the lock nut ①.
- Turn the push rod ② until the center of the brake pedal is 98 mm (3.86 in) Ⓐ below the top face of the footrest.
- Tighten the lock nut ① securely.

**Rear brake master cylinder rod lock nut ①: 18 N·m (1.8 kg-m, 13.0 lb-ft)**

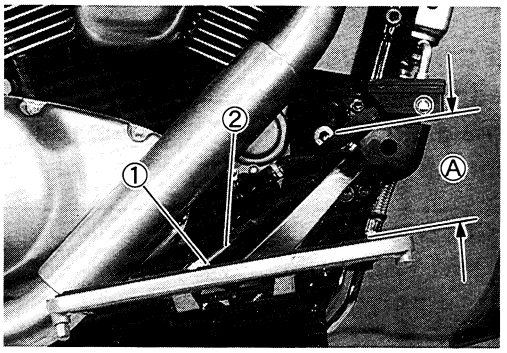


**Standard**
**Brake pedal height Ⓐ: 98 mm (3.86 in)**

**BRAKE LIGHT SWITCH**

Adjust the rear brake light switch so that the brake light will come on just before pressure is felt when the brake pedal is depressed.

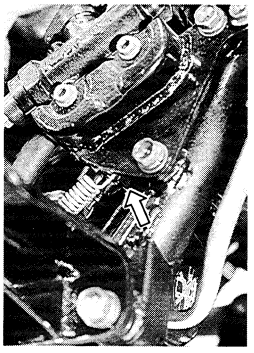

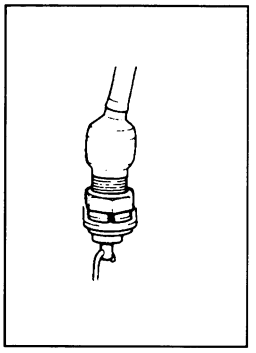

## FINAL GEAR OIL

**Replace initially at 1 000 km (600 miles, 1 month) and inspect every 12 000 km (7 500 miles, 12 months).**

- Keep the motorcycle upright and place the handlebars straight.
- Place an oil pan below the final gear case and drain oil by removing filler cap ① and drain plug ②.
- Refit the drain plug ② and pour the specified oil (SAE 90 hypoid gear oil with GL-5 under API classification) through the filler hole until the oil level reaches the filler hole.
- Refit the filler cap ①.

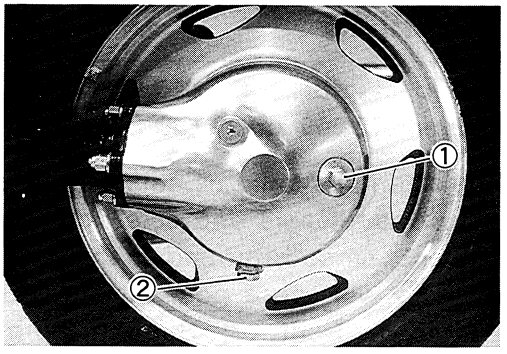


**Necessary amount of final gear oil:**
**200–220 ml (6.8/7.0–7.4/7.7 US/Imp oz)**

**Oil drain plug: 23 N·m (2.3 kg-m, 16.5 lb-ft)**

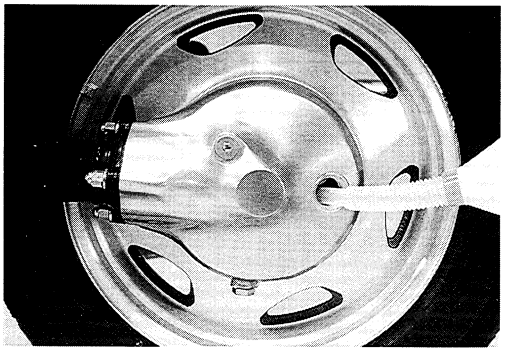

## TIRE

**Inspect every 6 000 km (4 000 miles, 6 months).**

**TIRE TREAD CONDITION**

Operating the motorcycle with excessively worn tires will decrease riding stability and consequently invite a dangerous situation. It is highly recommended to replace a tire when the remaining depth of the tire tread reaches the following specification.

**TOOL 09900-20805: Tire depth gauge**

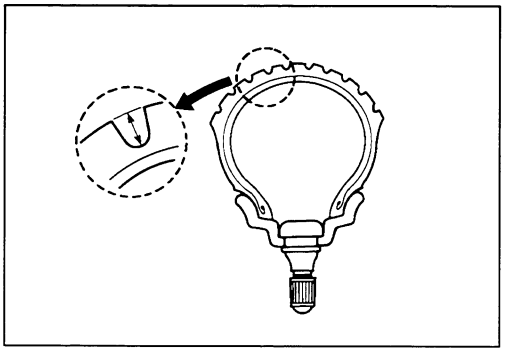

**Service Limit**
**Tire tread depth (FRONT): 1.6 mm (0.06 in)**
**(REAR) : 2.0 mm (0.08 in)**

### TIRE PRESSURE

If the tire pressure is too high or too low, steering will be adversely affected and tire wear increased. Therefore, maintain the correct tire pressure for good roadability and longer tire life. Cold inflation tire pressure is as follows.

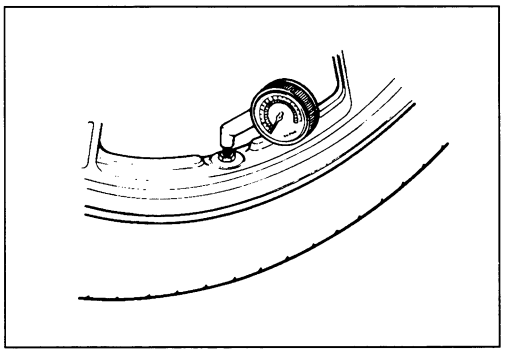

| COLD INFLATION TIRE PRESSURE | SOLO RIDING | | | DUAL RIDING | | |
|---|---|---|---|---|---|---|
| | kPa | kgf/cm$^2$ | psi | kPa | kgf/cm$^2$ | psi |
| FRONT | 200 | 2.00 | 29 | 200 | 2.00 | 29 |
| REAR | 250 | 2.50 | 36 | 250 | 2.50 | 36 |

**⚠ CAUTION**

**The standard tire fitted on this motorcycle is a 150/80-16 71H for the front (BRIDGESTONE G703 G) and a 180/70-15 M/C 76H for the rear (BRIDGESTONE G702). The use of tires other than those specified may cause instability. It is highly recommended to use the specified tires.**

## STEERING

**Inspect initially at 1 000 km (600 miles, 1 month) and every 12 000 km (7 500 miles, 12 months) thereafter.**

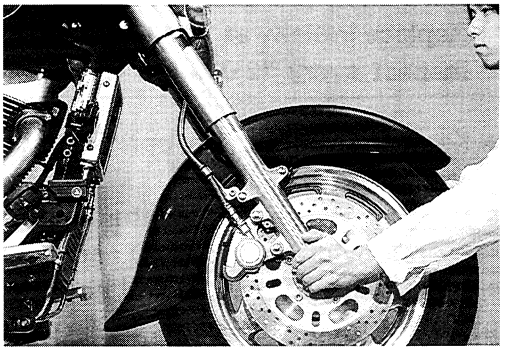

The steering should be adjusted properly for smooth turning of handlebars and safe operation. Overtight steering prevents smooth turning of the handlebars and too loose steering will cause poor stability. Check that there is no play in the front fork. Support the motorcycle so that the front wheel is off the ground. With the wheel facing straight ahead, grasp the lower fork tubes near the axle and pull forward. If play is found, readjust the steering. (See p. 6-26.)

## FRONT FORK

**Inspect every 12 000 km (7 500 miles, 12 months).**

Inspect the front forks for oil leakage, scoring or scratches on the outer surface of the inner tubes. Replace any defective parts, if necessary. (See pp. 6-11 to -18.)

## REAR SUSPENSION

**Inspect every 12 000 km (7 500 miles, 12 months).**

Inspect the rear shock absorber for oil leakage and check that there is no play in the swingarm. Replace any defective parts, if necessary. (See pp. 6-33 to -42.)

## EXHAUST PIPE BOLTS AND MUFFLER BOLTS

**Tighten initially at 1 000 km (600 miles, 1 month) and every 12 000 km (7 500 miles, 12 months) thereafter.**

- Tighten the exhaust pipe bolts and muffler mounting bolts to the specified torque.

**Exhaust pipe bolt: 23 N·m (2.3 kg-m, 16.5 lb-ft)**
**Muffler mounting bolt: 23 N·m (2.3 kg-m, 16.5 lb-ft)**

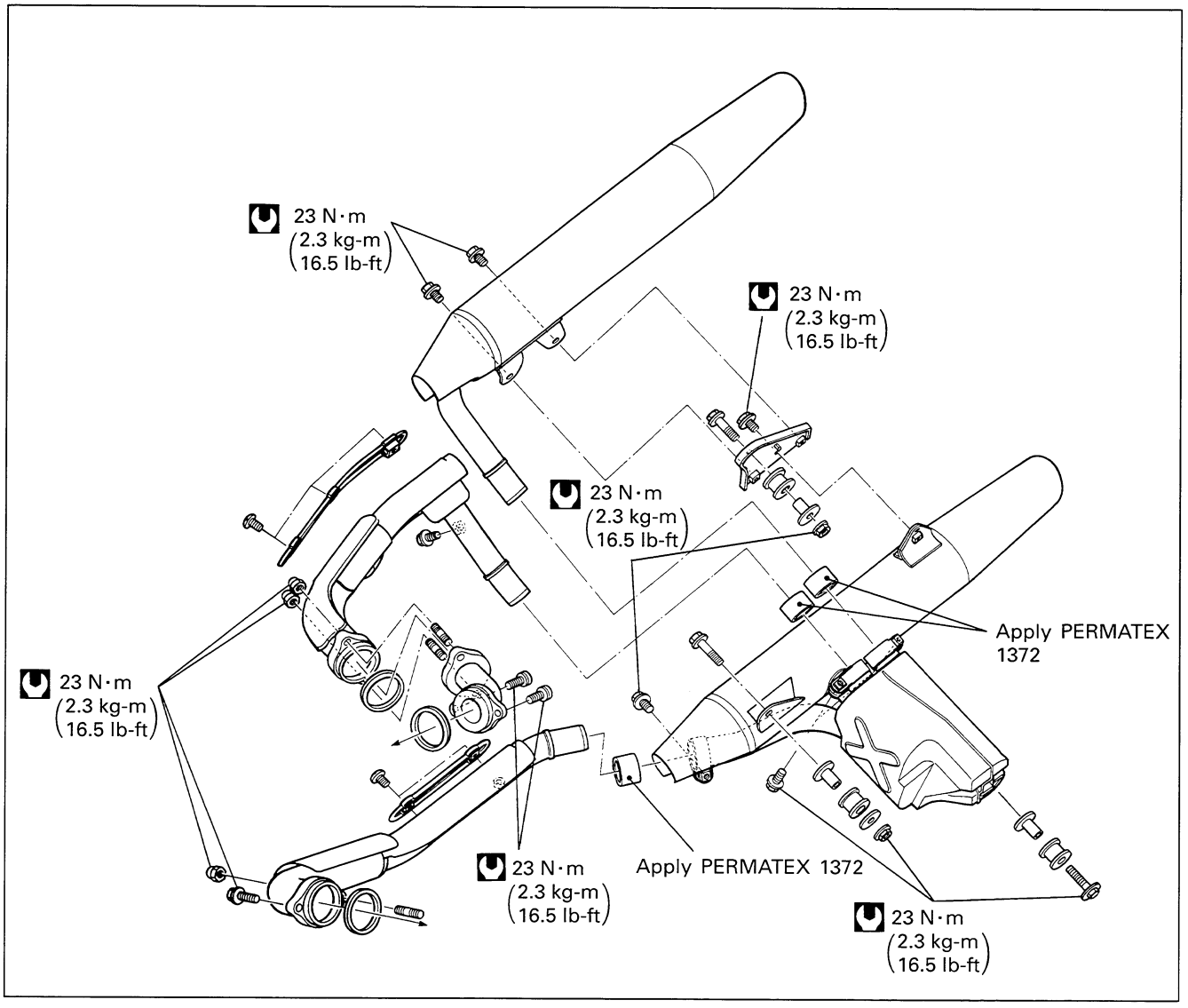

## CHASSIS BOLTS AND NUTS

**Tighten initially at 1 000 km (600 miles, 1 month) and every 6 000 km (4 000 miles, 6 months) thereafter.**

Check that all chassis bolts and nuts are tightened to their specified torque. (Refer to page 2-18 for the locations of the following nuts and bolts.)

| Item | N·m | kg-m | lb-ft |
|---|---|---|---|
| ① Front axle | 65 | 6.5 | 47.0 |
| ② Front axle pinch bolt | 23 | 2.3 | 16.5 |
| ③ Brake disc bolt (Front and Rear) | 23 | 2.3 | 16.5 |
| ④ Front fork cap bolt | 90 | 9.0 | 65.0 |
| ⑤ Front fork lower clamp bolt | 23 | 2.3 | 16.5 |
| ⑥ Steering stem head nut | 90 | 9.0 | 65.0 |
| ⑦ Front brake master cylinder mounting bolt | 10 | 1.0 | 7.0 |
| ⑧ Front brake caliper mounting bolt | 35 | 3.5 | 25.5 |
| ⑨ Front brake caliper housing bolt | 33 | 3.3 | 24.0 |
| ⑩ Brake hose union bolt | 23 | 2.3 | 16.5 |
| ⑪ Front brake hose joint nut | 15 | 1.5 | 11.0 |
| ⑫ Front brake hose adaptor | 23 | 2.3 | 16.5 |
| ⑬ Air bleeder valve | 7.5 | 0.75 | 5.5 |
| ⑭ Handlebar set bolt | 16 | 1.6 | 11.5 |
| ⑮ Handlebar holder nut | 50 | 5.0 | 36.0 |
| ⑯ Front footrest bolt | 50 | 5.0 | 36.0 |
| ⑰ Rear brake master cylinder rod lock nut | 18 | 1.8 | 13.0 |
| ⑱ Rear brake pedal bolt | 16 | 1.6 | 11.5 |
| ⑲ Rear brake master cylinder mounting bolt | 10 | 1.0 | 7.0 |
| ⑳ Clutch hose union bolt | 23 | 2.3 | 16.5 |
| ㉑ Clutch master cylinder mounting bolt | 10 | 1.0 | 7.0 |
| ㉒ Rear swingarm pivot bolt (Left) | 100 | 10.0 | 72.5 |
| ㉓ Rear swingarm pivot bolt (Right) | 9.5 | 0.95 | 7.0 |
| ㉔ Rear swingarm pivot lock nut | 100 | 10.0 | 72.5 |
| ㉕ Rear shock absorber mounting nut (Upper and Lower) | 50 | 5.0 | 36.0 |
| ㉖ Rear cushion lever/rod mounting nut | 135 | 13.5 | 97.5 |
| ㉗ Rear axle nut | 110 | 11.0 | 79.5 |
| ㉘ Rear caliper mounting bracket bolt/nut | 60 | 6.0 | 43.5 |
| ㉙ Rear brake caliper mounting bolt | 35 | 3.5 | 25.5 |
| ㉚ Rear brake caliper housing bolt | 33 | 3.3 | 24.0 |
| ㉛ Final gear case mounting nut | 40 | 4.0 | 29.0 |

*NOTE:*

* *Rear to the pages 6-12 and -13 for the front fork lower clamp bolt ⑤ tightening.*
* *Refer to the pages 6-35 and -36 for the rear shock absorber mounting nut ㉕ and rear cushion lever/rod mounting nut ㉖ tightening.*
* *Refer to the page 6-53 for the rear brake caliper housing bolt ㉚ tightening.*

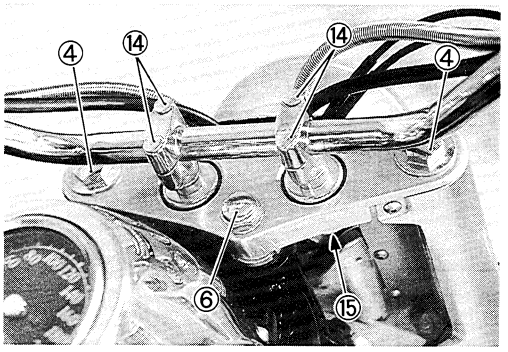
4
14
14
4
6
15

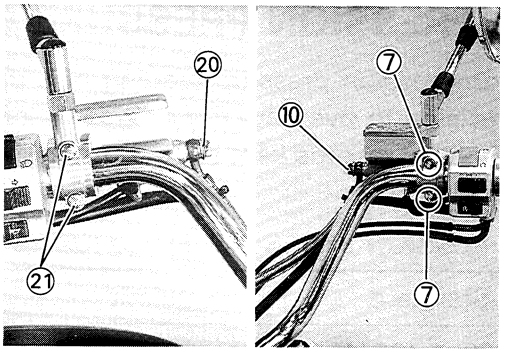
20
21
7
10
7

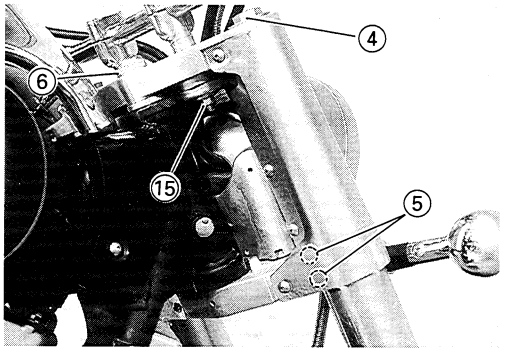
4
6
15
5

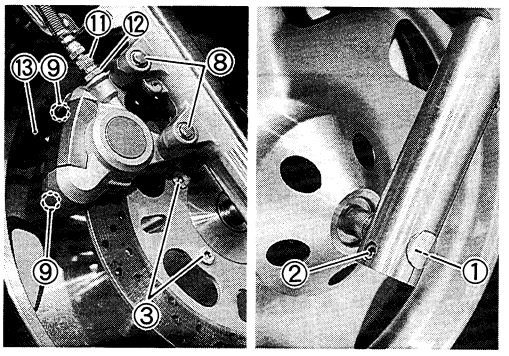
11
12
13
9
8
9
3
2
1

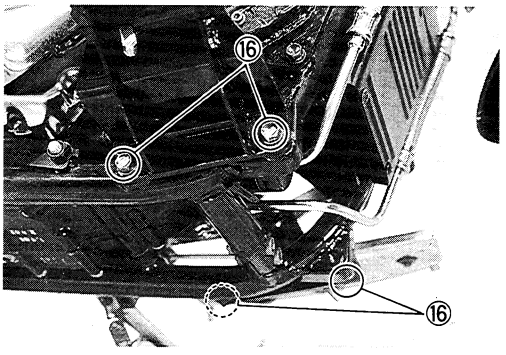
16
16

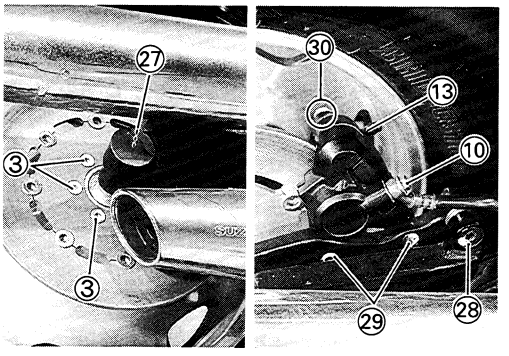
27
3
3
30
13
10
29
28

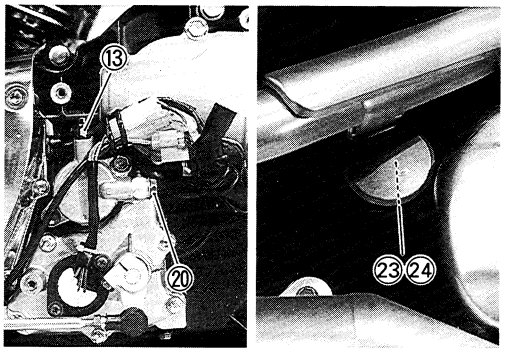
13
20
23
24

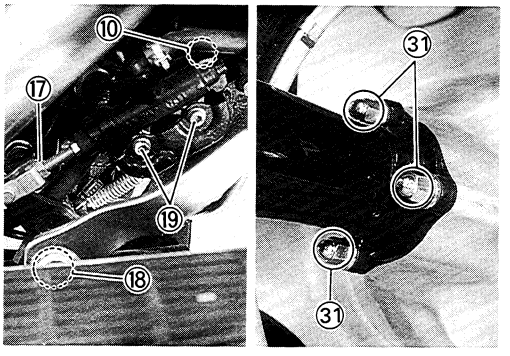
10
17
19
18
31
31

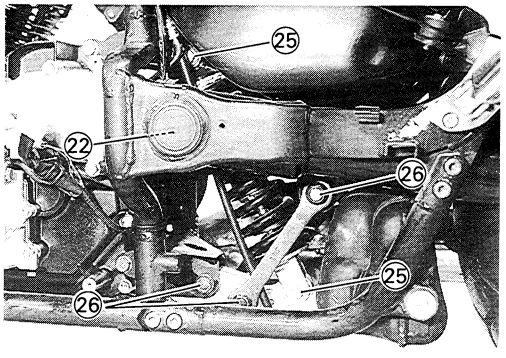
25
22
26
25
26

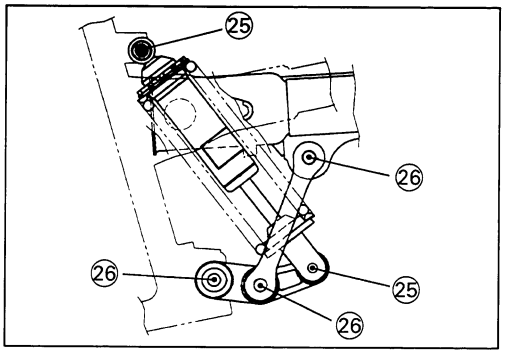
25
26
26
25
26

# COMPRESSION PRESSURE CHECK

The compression pressure reading of a cylinder is a good indicator of its internal condition. The decision to overhaul the cylinder is often based on the results of a compression test. Periodic maintenance records kept at your dealership should include compression readings for each maintenance service.

COMPRESSION PRESSURE SPECIFICATION

| Standard | Limit | Difference |
|---|---|---|
| 1 000–1 400 kPa<br>(10–14 kg/cm$^2$<br>142–199 psi) | 800 kPa<br>(8 kg/cm$^2$<br>114 psi) | 200 kPa<br>(2 kg/cm$^2$<br>28 psi) |

**Low compression pressure can indicate any of the following conditions:**
* Worn piston or piston rings
* Piston rings stuck in grooves
* Poor valve seating
* Ruptured or otherwise defective cylinder head gasket
* Damaged lash adjuster
* Starter motor cranks too slowly

**Overhaul the engine in the following cases:**
* Compression pressure in one of two cylinders is less than 800 kPa (8 kg/cm$^2$, 114 psi).
* The difference in compression pressure between two cylinders is more than 200 kPa (2 kg/cm$^2$, 28 psi).
* Two compression pressure readings are below 1 000 kPa (10 kg/cm$^2$, 142 psi).

# COMPRESSION TEST PROCEDURE

*NOTE:*
* *Before testing the engine for compression pressure, make sure that the cylinder head bolts are tightened to the specified torque values and automatic de-compression cable are properly adjusted.*
* *Have the engine warmed-up before testing.*
* *Make sure that the battery is fully-charged.*

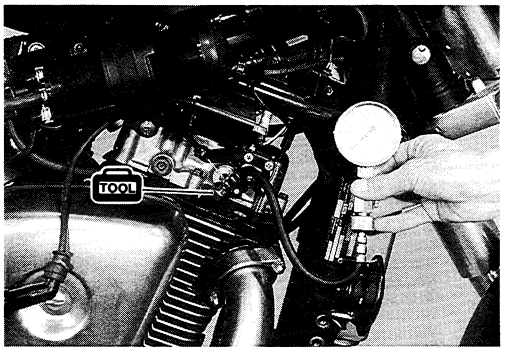


Remove the related parts and test the compression pressure in the following manner.
- Remove all of the spark plugs. (See p. 2-3.)
- Install the compression gauge and adaptor in the spark plug hole. Make sure that the connection is tight.
- Keep the throttle grip in the fully opened position.
- Press the starter button and crank the engine for a few seconds. Record the maximum gauge reading as the cylinder compression.
- Repeat this procedure with the other cylinders.

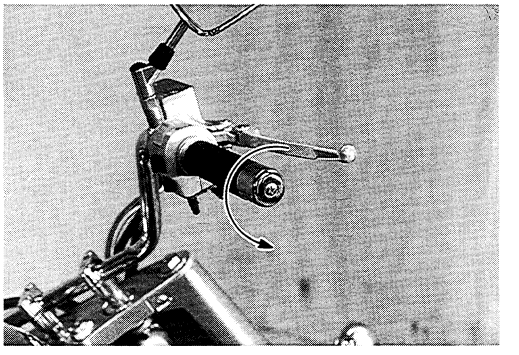

TOOL **09915-64510: Compression gauge**
**09918-03810: Compression gauge adaptor**

# OIL PRESSURE CHECK

Check the engine oil pressure periodically. This will give a good indication of the condition of the moving parts.

OIL PRESSURE SPECIFICATION

| | |
|---|---|
| **Above 350 kPa (3.5 kg/cm$^2$, 50 psi)**<br>**Below 650 kPa (6.5 kg/cm$^2$, 92 psi)** | **at 3 000 r/min., Oil temp. at 60°C (140°F)** |

If the oil pressure is lower or higher than the specification, the following causes may be considered.

**LOW OIL PRESSURE**

* Clogged oil filter
* Oil leakage from the oil passage
* Damaged O-ring
* Defective oil pump
* Combination of the above items

**HIGH OIL PRESSURE**

* Engine oil viscosity is too high.
* Clogged oil passage
* Combination of the above items

## OIL PRESSURE TEST PROCEDURE

Start the engine and check if the oil pressure indicator light is turned on. If the light stays on, check the oil pressure indicator light circuit. If the circuit is OK, check the oil pressure in the following manner.

- Remove the main oil gallery plug ①.
- Install the oil pressure gauge and adaptor into the main oil gallery.
- Warm up the engine as follows:
  Summer 10 min. at 2 000 r/min.
  Winter 20 min. at 2 000 r/min.
- After warm up, increase the engine speed to 3 000 r/min. and read the oil pressure gauge.

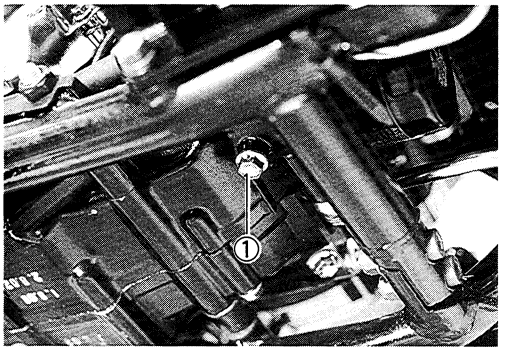


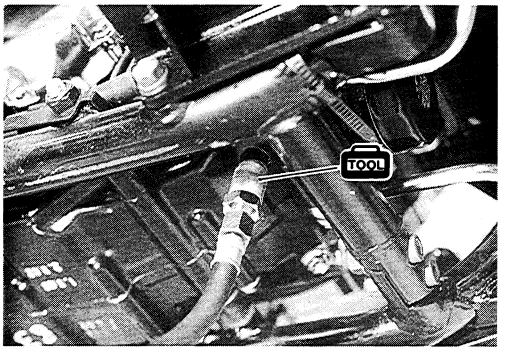


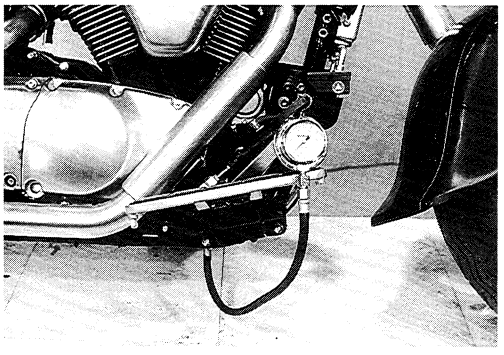

TOOL **09915-74520: Oil pressure gauge hose**
**09915-74532: Oil pressure gauge adaptor**
**09915-77330: Meter (for high pressure)**
**09900-25008: Multi circuit tester**

**Main oil gallery plug: 18 N·m (1.8 kg-m, 13.0 lb-ft)**

*NOTE:*
*The engine speed can be observed by using the multi circuit tester.*

# ENGINE

CONTENTS

ENGINE COMPONENTS REMOVABLE WITH ENGINE IN PLACE ..... 3- 1
ENGINE REMOVAL AND INSTALLATION ..... 3- 2
ENGINE DISASSEMBLY AND REASSEMBLY ..... 3-16

3

CAMSHAFT/CYLINDER HEAD/CYLINDER HEAD COVER 3A
CYLINDER/PISTONS 3B
CLUTCH 3C
STARTER SYSTEM/GENERATOR/SIGNAL GENERATOR 3D
GEARSHIFT LINKAGE 3E
CRANKCASE/TRANSMISSION/CRANKSHAFT/CONROD 3F
ENGINE LUBRICATION SYSTEM 3G

# ENGINE COMPONENTS REMOVABLE WITH ENGINE IN PLACE

The parts listed below can be removed and reinstalled without removing the engine from the frame. Refer to the page listed in this section for removal and reinstallation instructions.

## ENGINE LEFT SIDE

| PARTS | REMOVAL | INSTALLATION |
|---|---|---|
| Secondary case | 3-24, 4-5 | 3-41, 4-10 |
| Secondary driven bevel gear | 3-25, 4-5 | 3-40, 4-10 |
| Neutral indicator light switch | 3-25 | 3-40 |
| Clutch release cylinder | 6-59 | 6-61 |
| Starter torque limiter | 3-27, 3D-1 | 3-36, 3D-6 |
| Starter idle gear | 3-17, 3D-1 | 3-60, 3D-6 |
| Starter clutch | 3-27, 3D-1, 3D-5 | 3-38, 3D-5, 3D-6 |
| Gearshift lever and linkage | 3-26, 3E-1 | 3-38, 3E-5 |
| Generator | 3-27, 3D-1 | 3-38, 3D-6 |

## ENGINE RIGHT SIDE

| PARTS | REMOVAL | INSTALLATION |
|---|---|---|
| Clutch cover | 3-20, 3C-1 | 3-50, 3C-5 |
| Clutch pressure, drive and driven plates | 3-20, 3C-1 | 3-48, 3C-5 |
| Clutch sleeve hub | 3-21, 3C-2 | 3-46, 3C-5 |
| Clutch housing | 3-22, 3C-2 | 3-46, 3C-4 |
| Oil pump drive gears | 3-22, 3C-2 | 3-46, 3C-4 |
| Oil pump driven gears | 3-23 | 3-45 |
| Oil pressure switch | 3-24, 3G-5 | 3-43, 3G-7 |
| Oil pressure regulator | 3-23, 3G-3 | 3-45, 3G-4 |
| Back torque limiter | 3-22, 3C-2 | 3-46, 3C-5 |
| Rear clutch cover | 3-6 | 3C-6 |

## ENGINE CENTER

| PARTS | REMOVAL | INSTALLATION |
|---|---|---|
| Carburetor assembly | 5-16 | 5-26 |
| Oil filter | 2-6 | 2-7 |
| Oil cooler | 3G-5 | 3-13 |
| Starter motor | 7-14 | 7-17 |

# ENGINE REMOVAL AND INSTALLATION

## ENGINE REMOVAL

Before taking the engine out of the frame, wash the engine using a steam cleaner. Engine removal is sequentially explained in the following steps. Reinstall the engine by reversing the removal procedure.

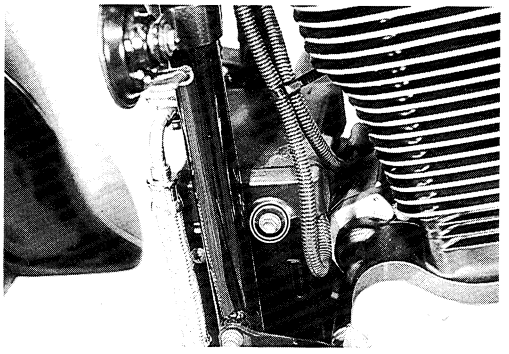

- Remove the battery cover.

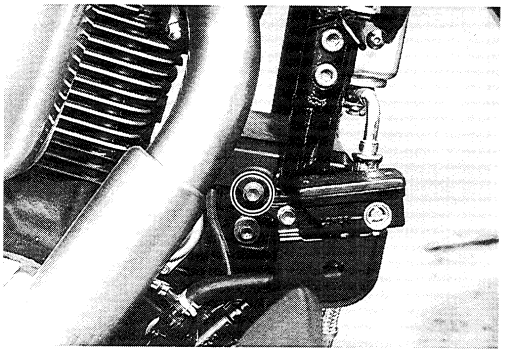

- Disconnect the battery ⊖ lead wire.

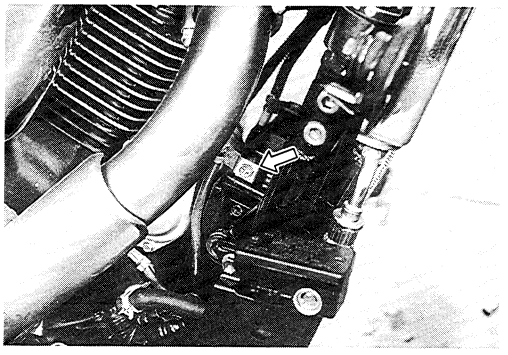

- Remove the oil drain plug ① and drain engine oil. (See pp. 2-6 and -7.)

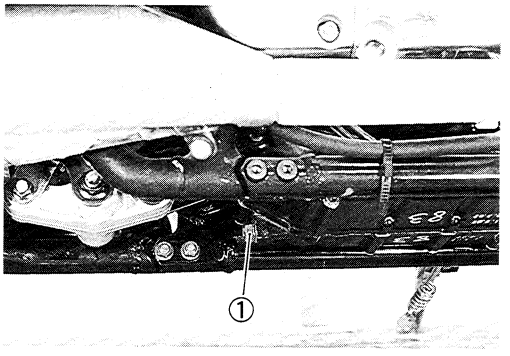


- Remove the seat (See p. 6-2.) ②.
- Remove the meter and fuel inlet cover ③. (See pp. 6-3 and -4.)
- Remove the frame head covers ④ and upper covers ⑤. (See p. 6-3.)

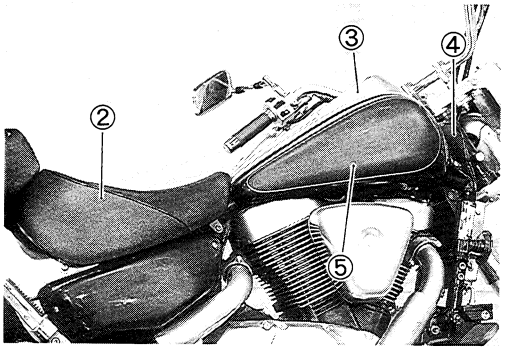

- Remove the engine side box cover ①.

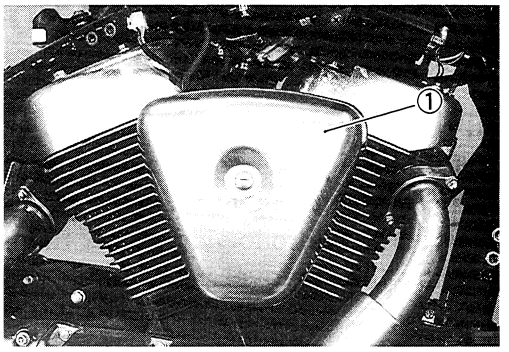


- Remove the engine side box ② and bracket ③.

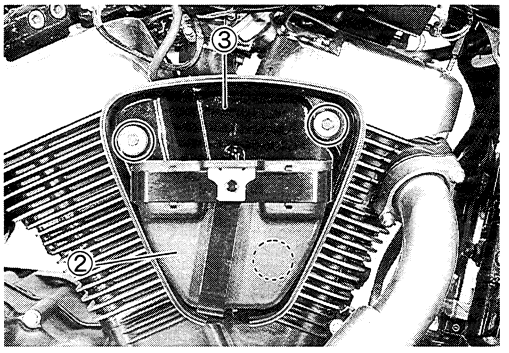


- Remove the PAIR (AIR SUPPLY) cover ④.
  (For E-03, -18, -28, and -33 models)

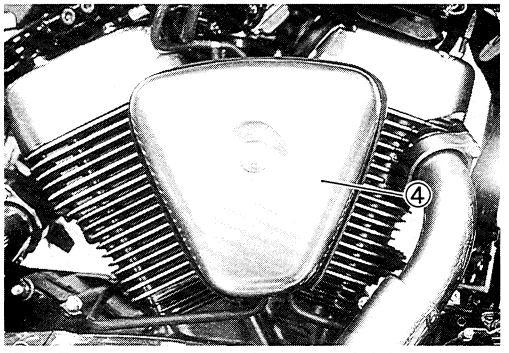


(For E-03, -18, -28, and -33 models)

- Disconnect the PAIR valve hoses ⑤ and PAIR control valve vacuum hose ⑥.
- Remove the PAIR system bracket by disconnecting the PAIR air cleaner hose.
  (For E-03, -18, -28, and -33 models)

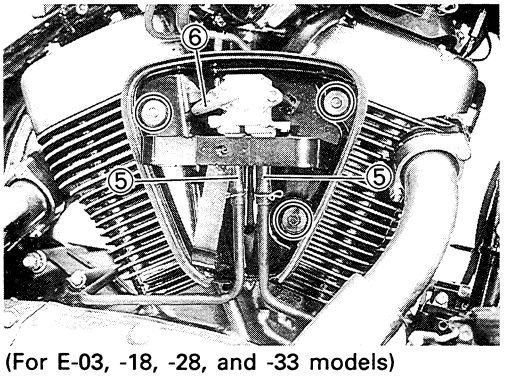


(For E-03, -18, -28, and -33 models)

- Remove the No.1 and No.2 PAIR air pipe.
  (For E-03, -18, -28, and -33 models)

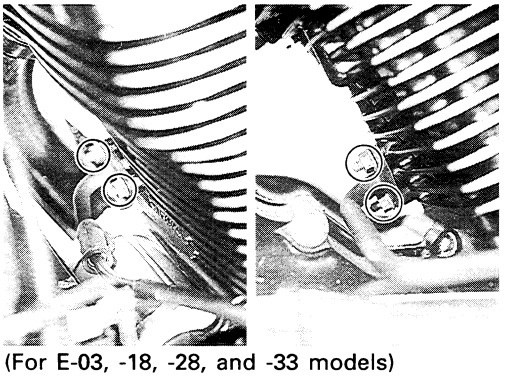

(For E-03, -18, -28, and -33 models)

- Disconnect the horn lead wire and remove the horn with the bracket. (For E-03, -24, -28, and -33 models)

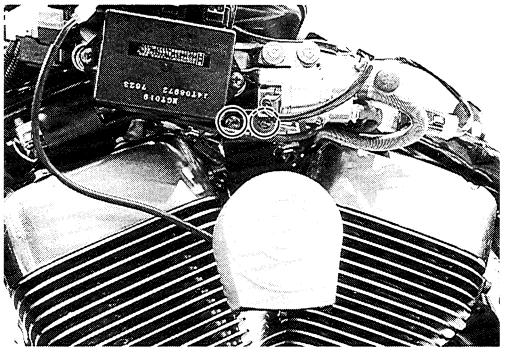

- Loosen the carburetor clamp screw. (Air cleaner side)

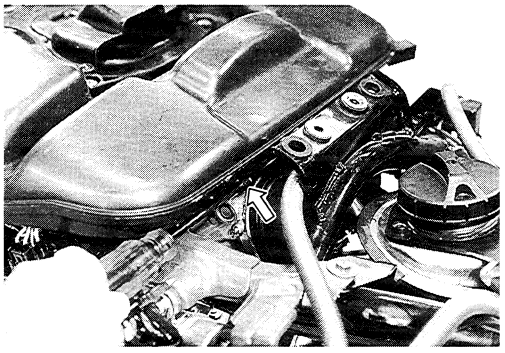

- Remove the air cleaner box ① with breather hose ②.

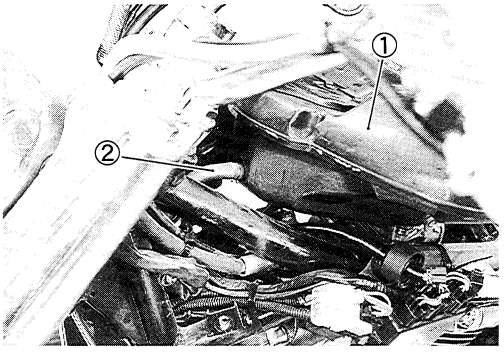


- Loosen the carburetor clamp screws ③. (Engine side)
- Remove the carburetor assembly.

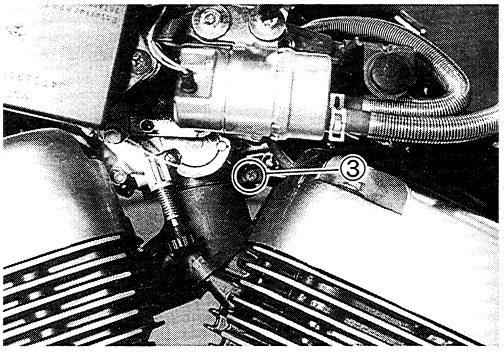


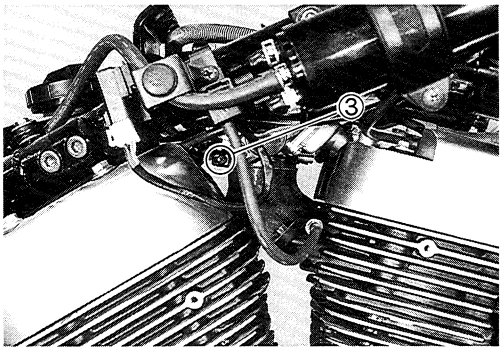

- Disconnect the MAP sensor hose ① from the intake pipe.

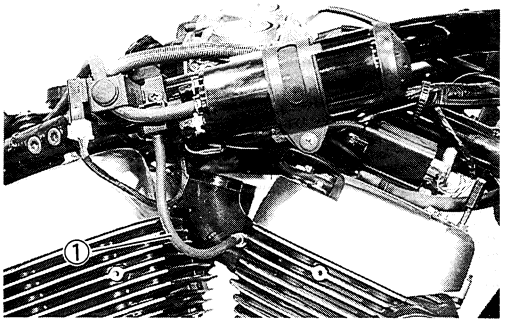


- Remove the upper muffler ① by removing the its mounting bolts ② and loosening its connecting bolt ③.

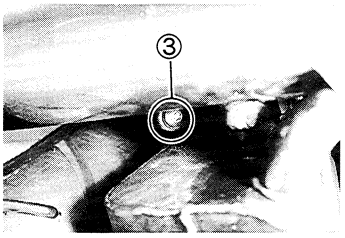


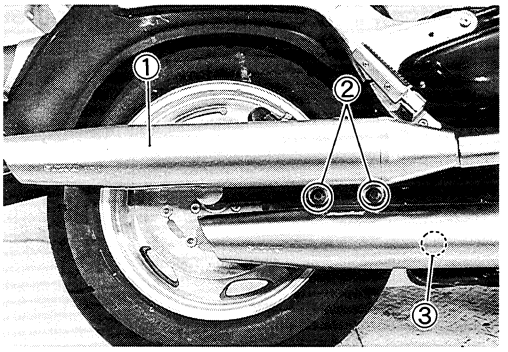


- Remove the exhaust pipe nuts and bolt.

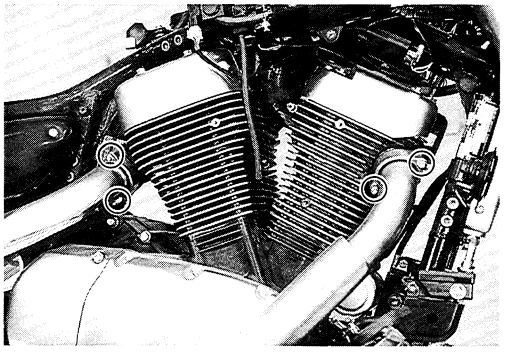

- Loosen the exhaust pipe connecting bolt ④.
- Remove the exhaust pipe/muffler assembly with its bracket ⑤.

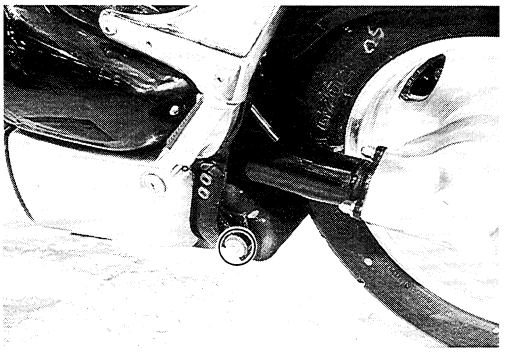

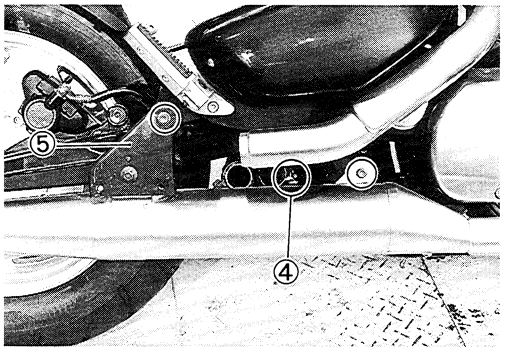

- Disconnect the battery ⊕ lead wire.
- Remove the battery cover ① and the battery.

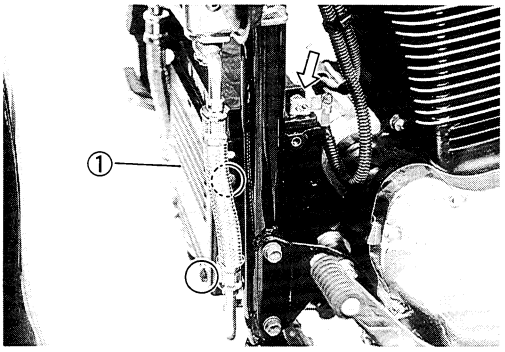


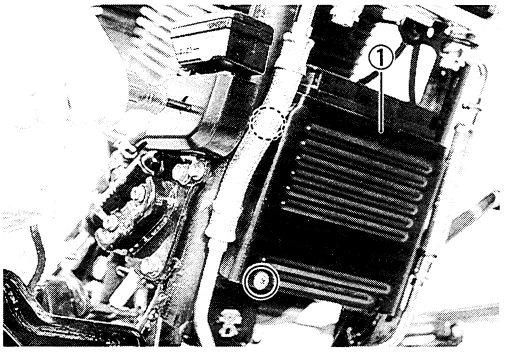


- Remove the battery holder ②.

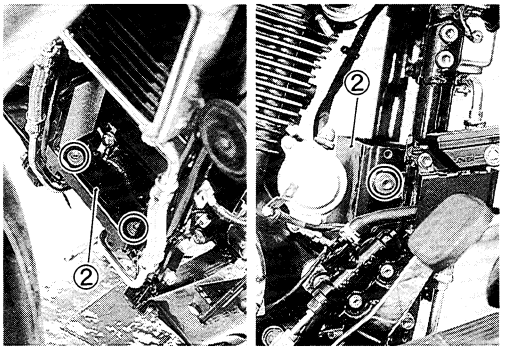


- Remove the rear clutch cover ③.

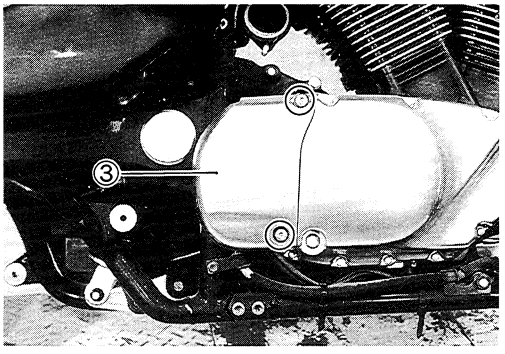


- Remove the fuse box mounting bracket.
- Disconnect the speed sensor lead wire coupler.
- Remove the brake hose clamp bolt.

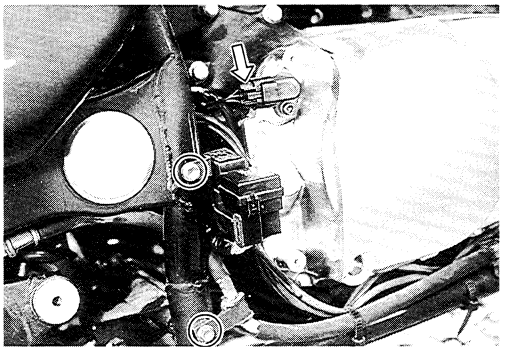

- Disconnect the starter motor lead wire, ground lead wire, and oil pressure switch lead wire.

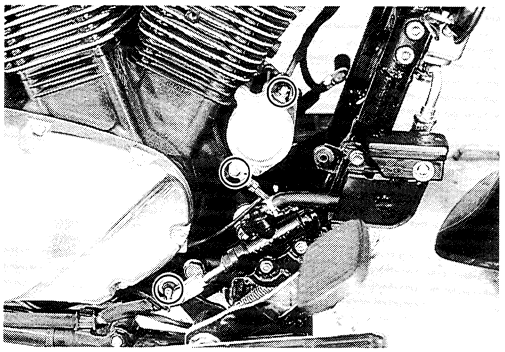

- Remove the secondary gear case cover mounting bolts.

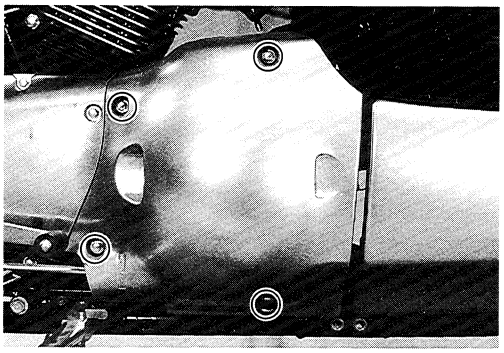

- Remove the secondary gear case cover by disconnecting the regulator/rectifier lead wire coupler.

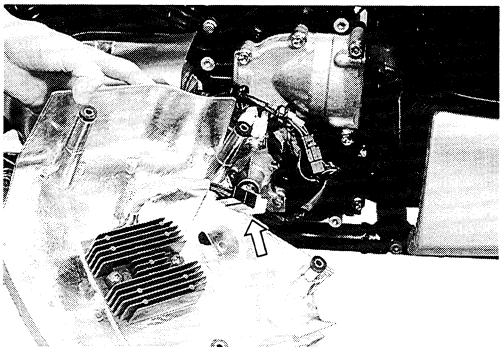

- Remove the gearshift lever by removing the mounting bolt.

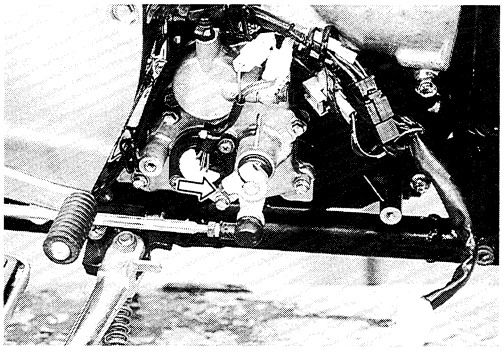

- Disconnect the neutral indicator light switch couplers ①, the side-stand switch coupler ②, the generator coupler ③ and the signal generator coupler ④.

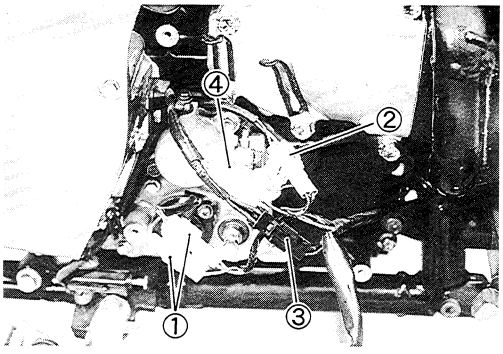

- Remove the clutch release cylinder by removing the bolts.

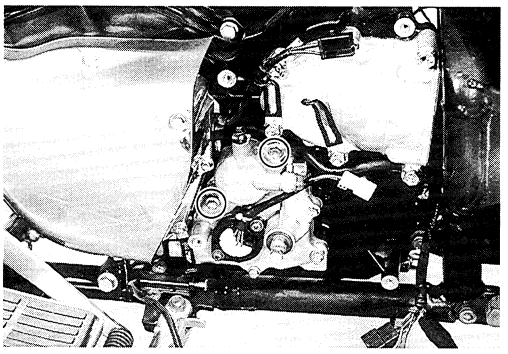

- Remove the push rod ①, spacers ② and dowel pins ③.

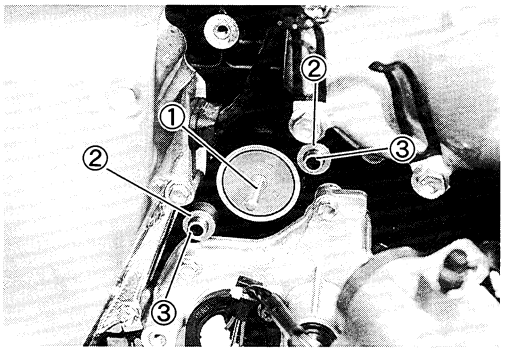


- Remove the cylinder head side caps.

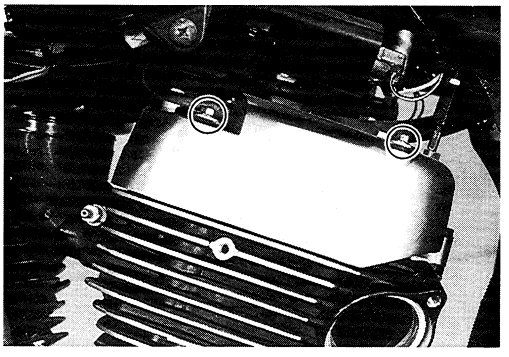

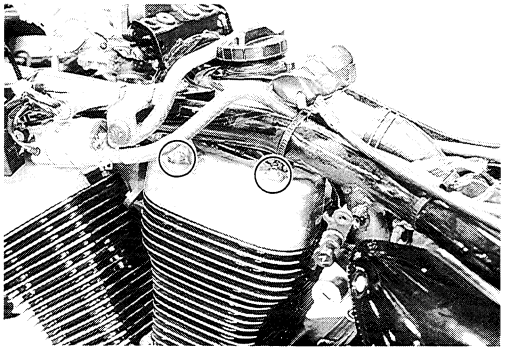

- Remove the spark plug caps.

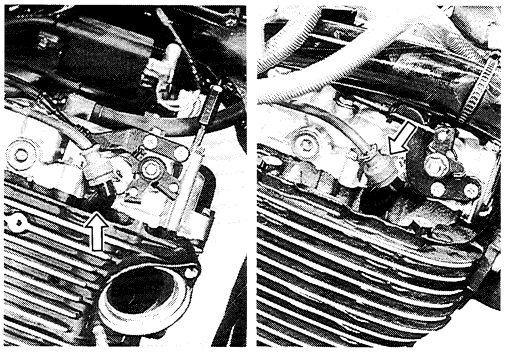

- Remove the automatic de-compression cables.

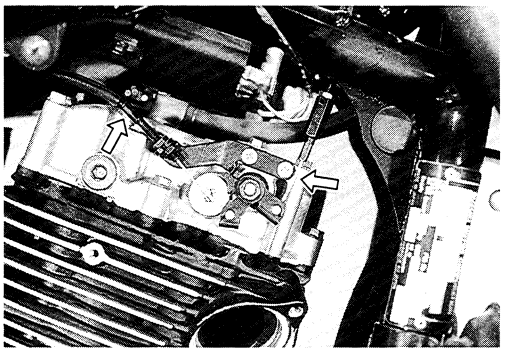

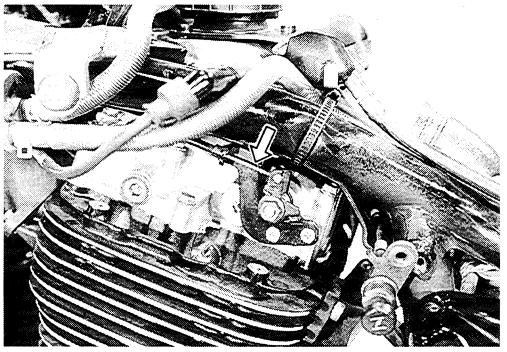

- Remove the automatic de-compression solenoid plunger by removing the bolt and the stopper ①.

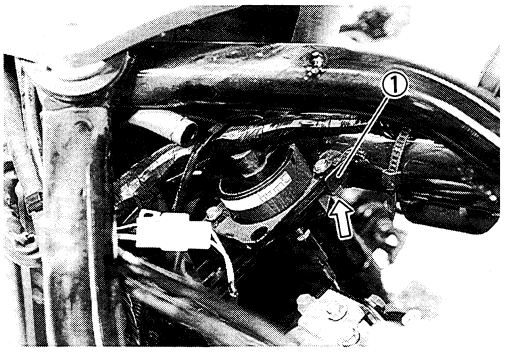


- Remove the oil cooler hose union bolts.

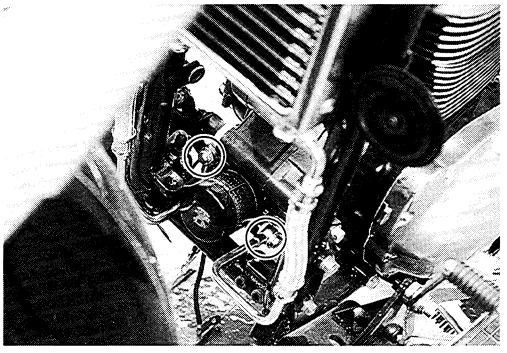

- Remove the engine mounting bolts and nuts.
- Remove the frame down tube mounting bolts and nuts.
- Remove the frame down tube ①.

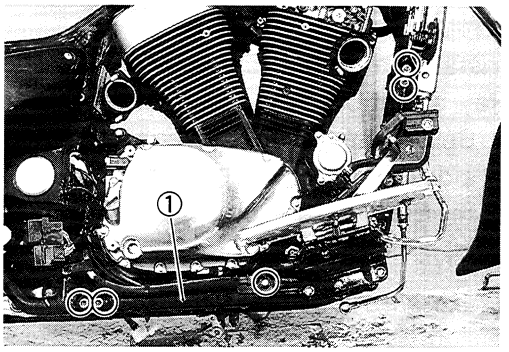


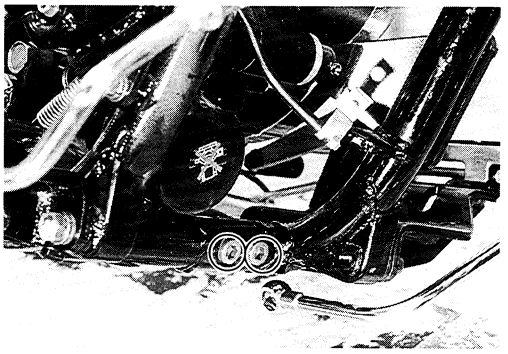

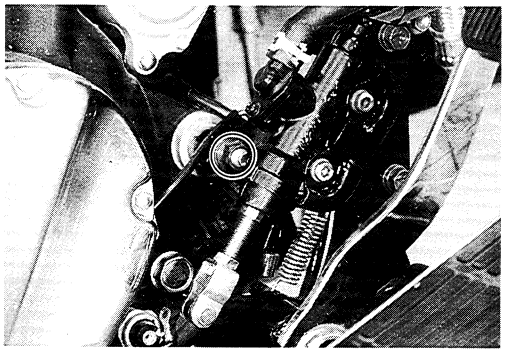

- Remove the right side spacers ②.
- Remove the engine mounting bracket ③.

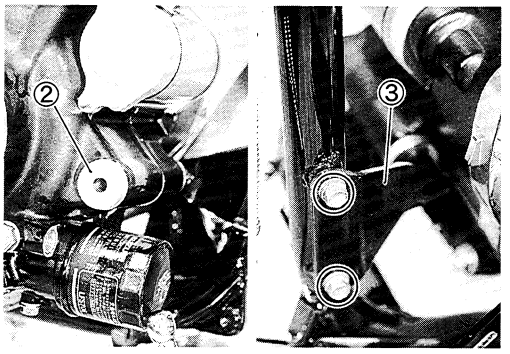


- Remove the left side footrest bracket.

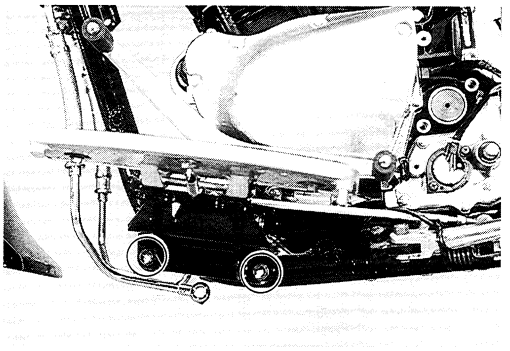

- Support the engine using an engine jack.
- Remove the engine mounting bolts and nuts ④.
- Gradually lower the engine.

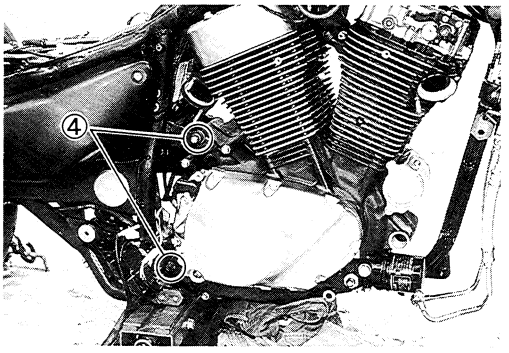

## ENGINE INSTALLATION

Install the engine in the reverse order of engine removal. Pay attention to the following points:

- Before installing the engine assembly, remove the left side frame cover ① (See p. 6-2.) and tool box ②, and then install the boot ③ and universal joint ④.

*NOTE:*
*Make sure that the "UP" mark Ⓐ on the boot ③ faces up.*

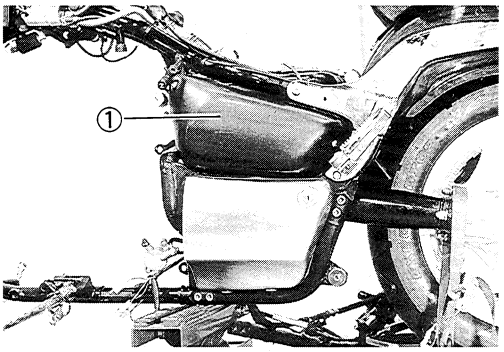


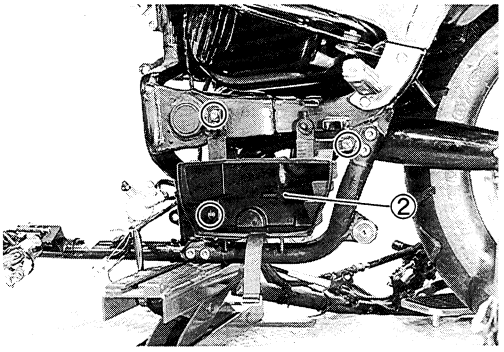


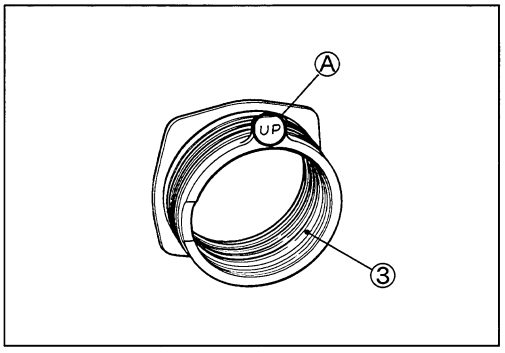


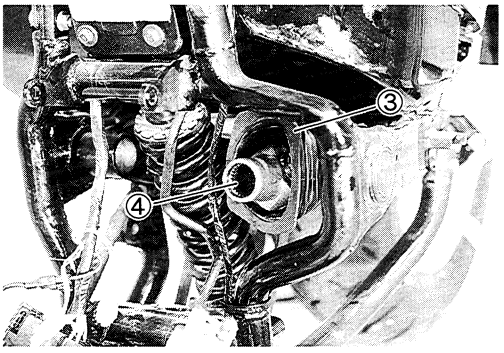


- Gradually raise the engine assembly, and then engage the secondary driven gear shaft to the universal joint.

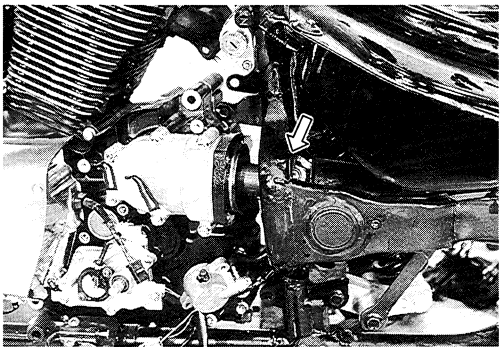

- First install the rear engine mounting bolts ⑤ after aligning the bolt holes in the frame and the engine.

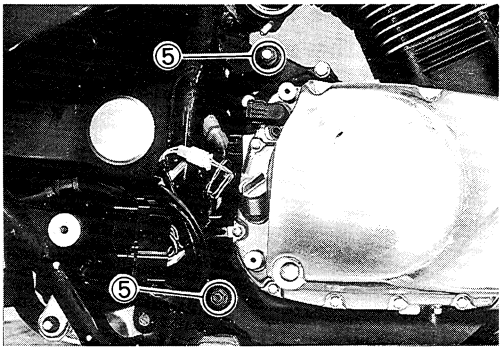

- Install the brackets, spacer, bolts and nuts properly, as shown in the following illustration.

*NOTE:*
*The engine mounting nuts are self-locking. Once the nut has been removed, they are no longer of any use.*
*Be sure to use new nuts and tighten them to the specified torque.*

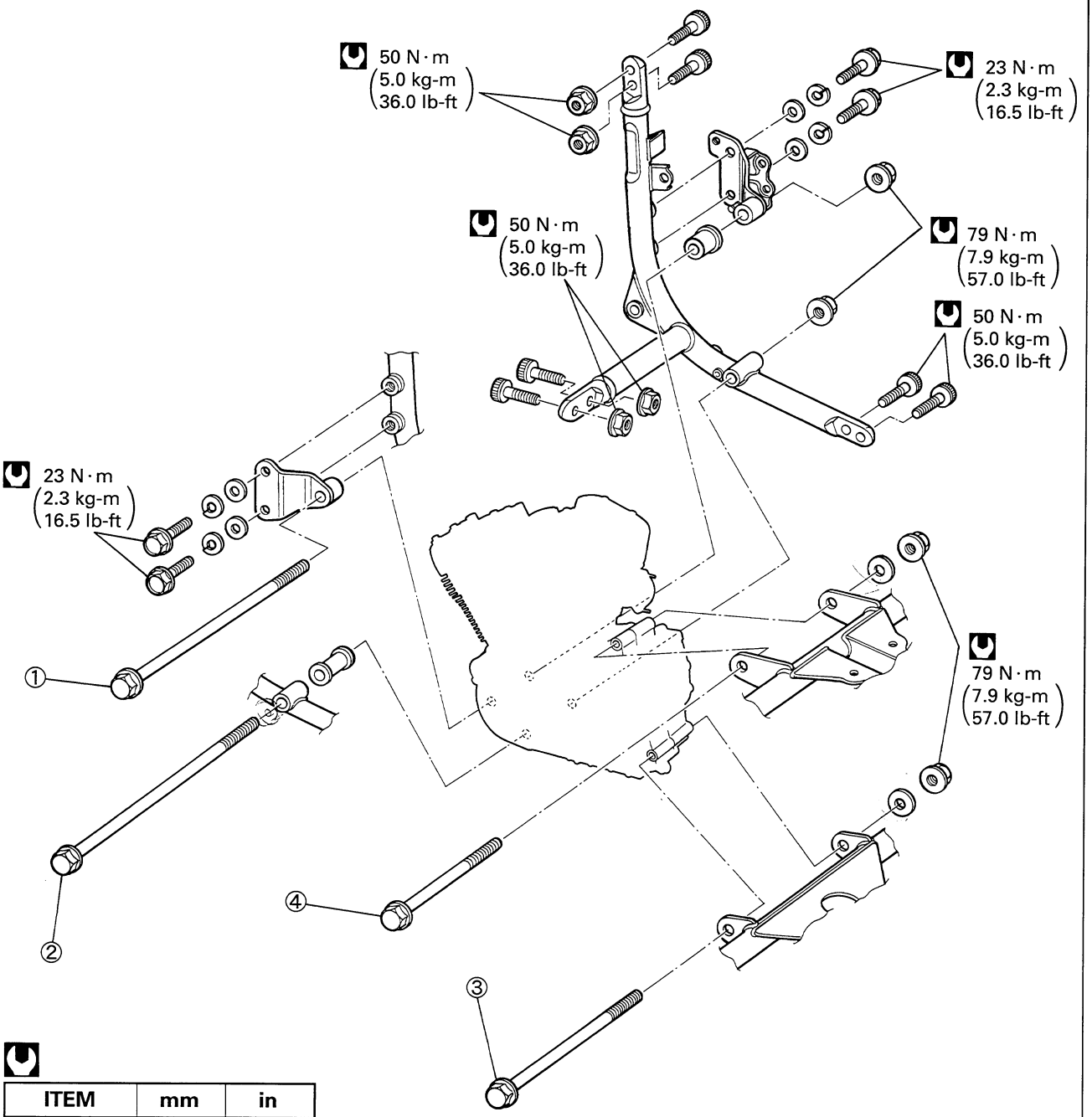


| ITEM | | mm | in |
|---|---|---|---|
| Bolt | ① | 205 | 8.07 |
| | ② | 260 | 10.24 |
| | ③ | 160 | 6.30 |
| | ④ | 140 | 5.51 |

- Properly fit the boot ① onto the engine and the swingarm.

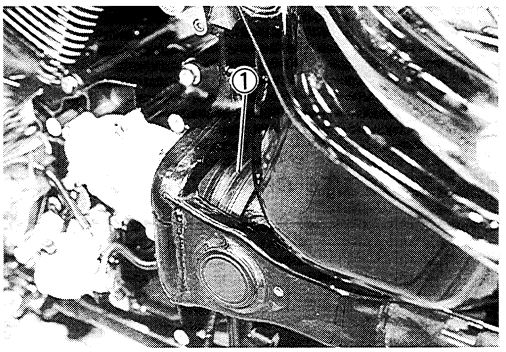


- Tighten the front footrest mounting bolts to the specified torque.

**Front footrest bolt: 50 N·m (5.0 kg-m, 36.0 lb-ft)**

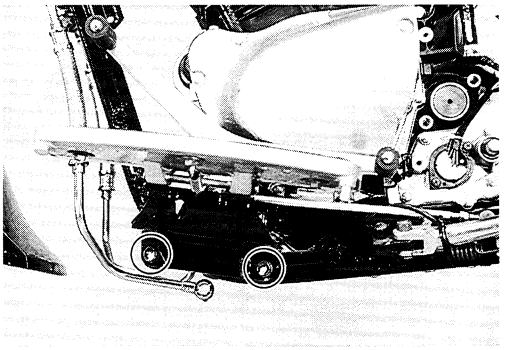

- Tighten the oil hose union bolts ② to the specified torque.

**Oil hose union bolt ②: 26 N·m (2.6 kg-m, 19.0 lb-ft)**

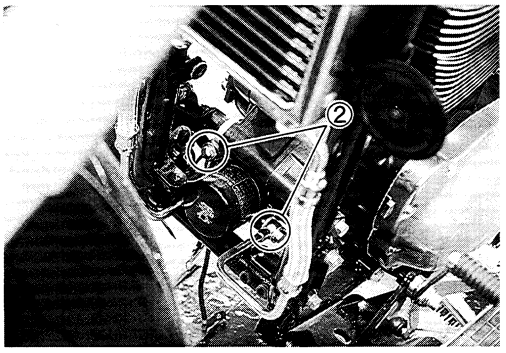


- Install the automatic de-compression cables and adjust the cable slack.

*NOTE:*
*Refer to pages 2-8 and -9 for the automatic de-compression cable adjustment.*

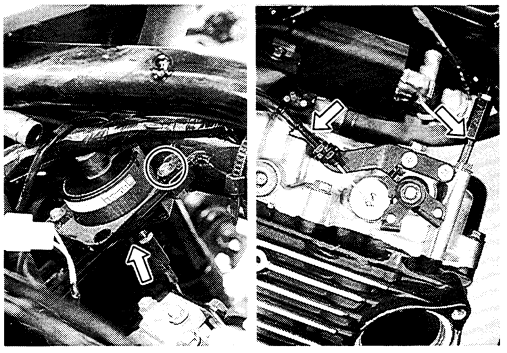

- Install the cylinder head side caps.

③ For front cylinder
④ For rear cylinder

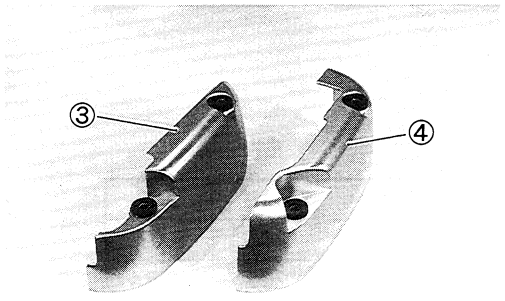

- Install the clutch push rod, spacers and dowel pins.

*NOTE:*
*Apply grease to the clutch push rod, when installing it.*

**99000-25010: SUZUKI SUPER GREASE "A"**

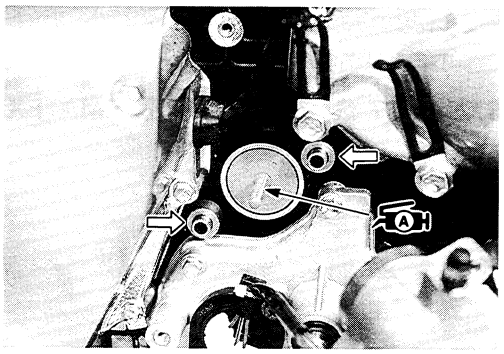

- Install the clutch release cylinder as shown.

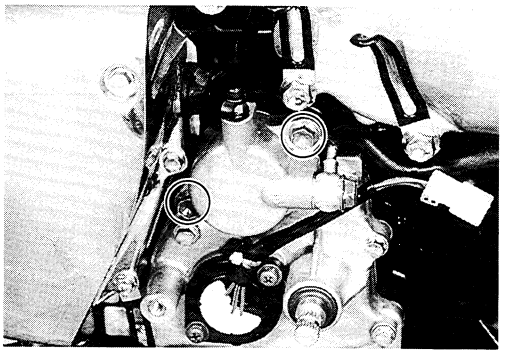

- Properly install the gearshift lever onto the gearshift shaft as shown.

**Standard**
**Gearshift lever height: 82 mm (3.23 in)**

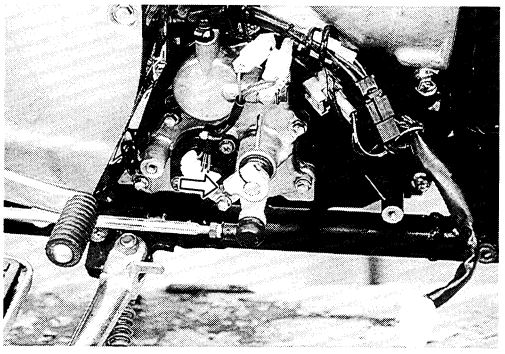

- Install the carburetor and air cleaner box.
- Position the carburetor clamps as shown in the following illustration.

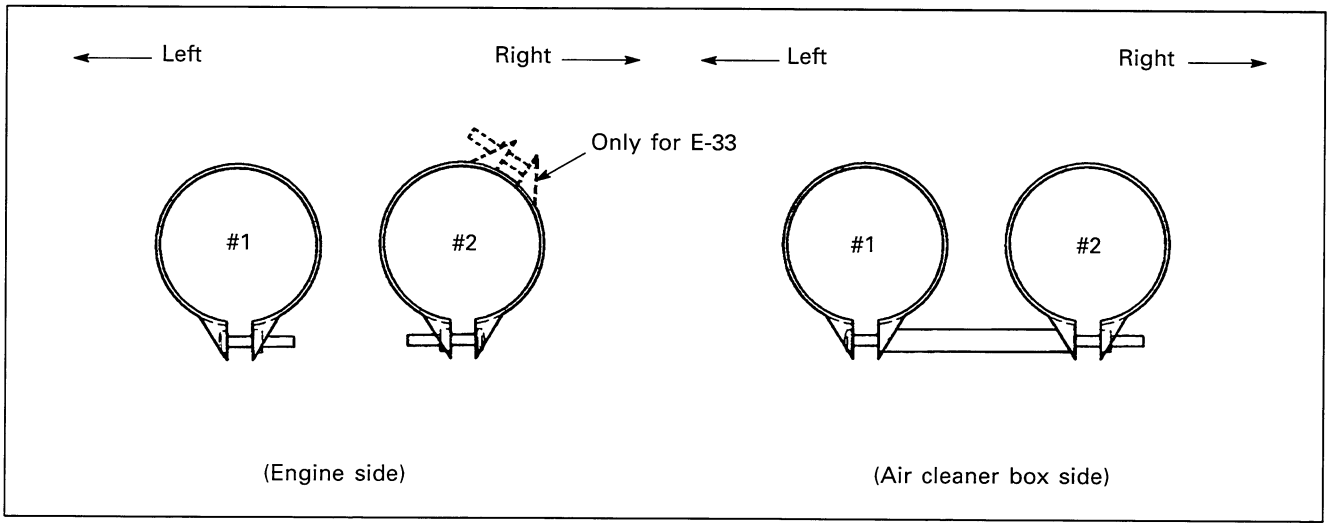


*NOTE:*
*Refer to pages 8-12 to -19 for the cable and hose routing.*

- Apply gas sealer to the inside and outside of the exhaust pipe connector.

**EXHAUST GAS SEALER: PERMATEX 1372**

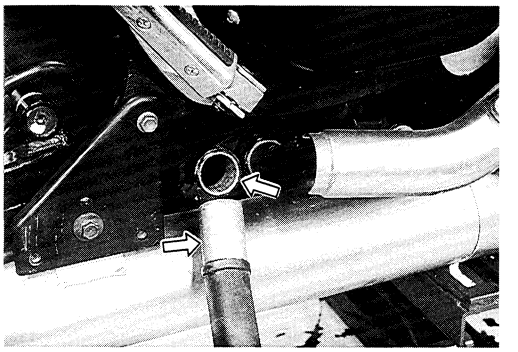

- Tighten the exhaust pipe bolts and muffler mounting bolts to the specified torque.

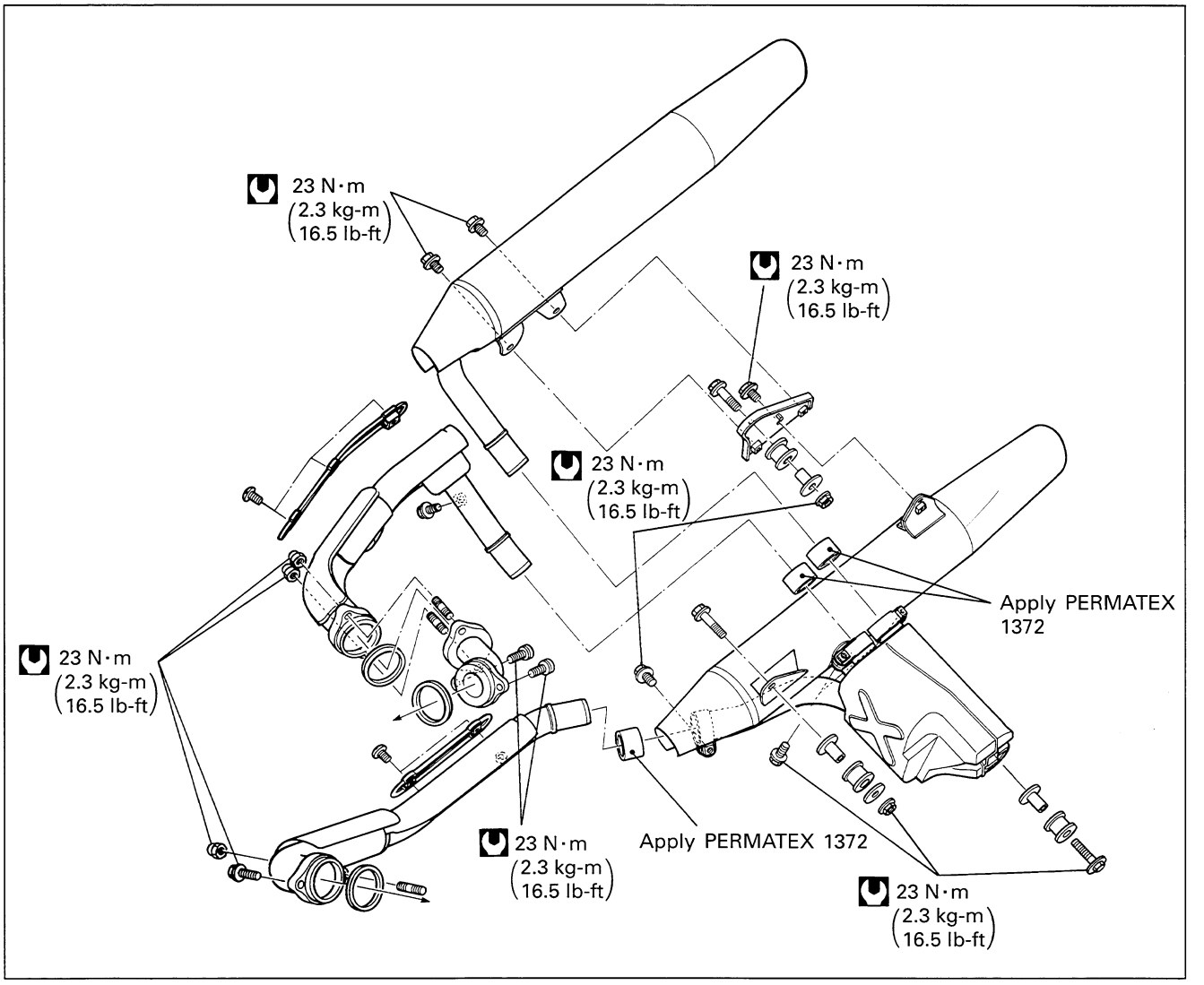


- Adjust the following items.

| | Page |
|---|---|
| * Engine oil | 2-6 and -7 |
| * Throttle valve synchronization | 5-27 to -29 |
| * Idling adjustment | 2-8 |
| * Throttle cable play | 2-10 |
| * Automatic de-compression cables | 2-8 and -9 |
| * Clutch air bleeding | 2-11 |

# ENGINE DISASSEMBLY AND REASSEMBLY

## ENGINE DISASSEMBLY

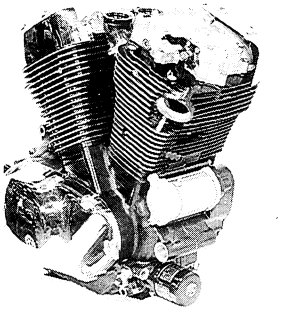

**⚠ CAUTION**

**Be sure to identify each removed part such as intake pipe, camshaft, cylinder head, piston, conrod etc. as to its location and lay the parts out in groups so that each will be restored to the original location during assembly.**

- Remove the spark plugs. (See p. 2-3.)
- Remove the cylinder head side caps.

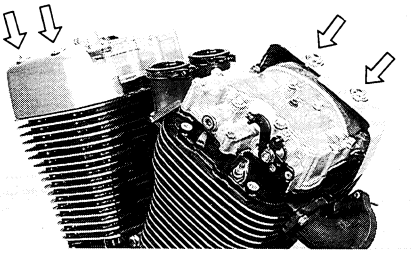

- Remove the breather cover.
- Remove the cylinder head covers.
- Remove the dowel pins and camshaft end caps.

*NOTE:*
*Slightly loosen the plug ① to facilitate later installation.* *(See p. 3-57.)*

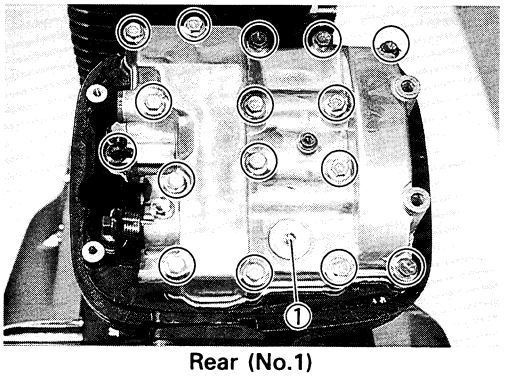


Rear (No.1)

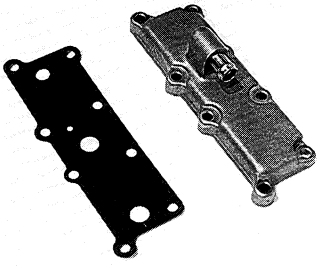

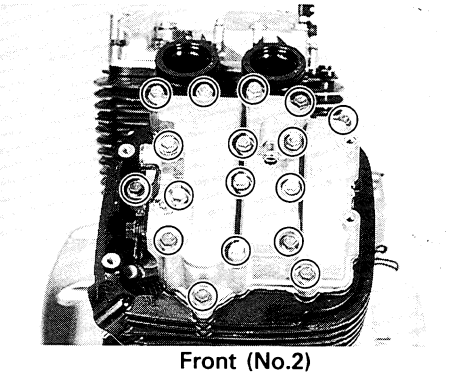

Front (No.2)

- Remove the generator cover ②.

*NOTE:*
*Refer to the section 3D for the generator cover servicing.*

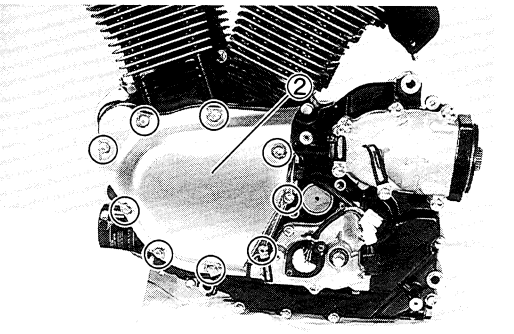

- Remove the dowel pins ① and the gasket ②.

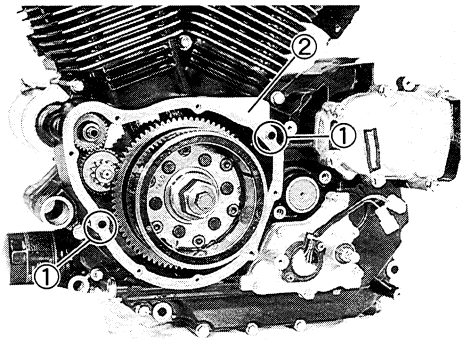


- Remove the starter idle gear ③, its shaft ④ and the washer ⑤.

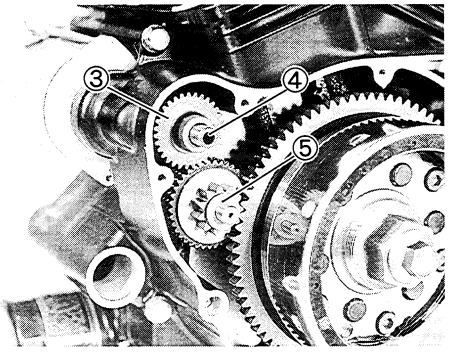


- Remove the bush ⑥ from the generator cover.

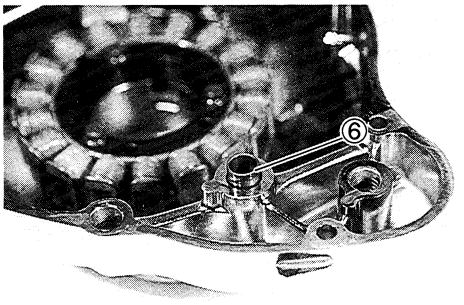


- Flatten the lock washers.
- Remove the cam sprockets by removing the bolts and washers.
- Remove the camshafts.

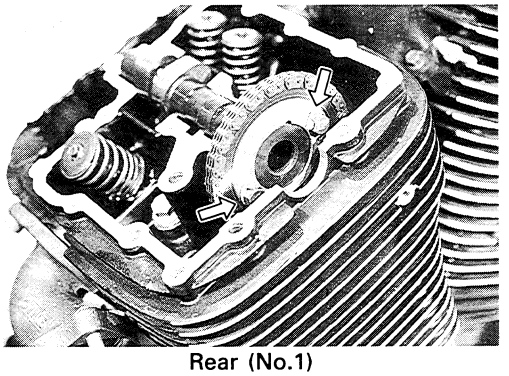

Rear (No.1)

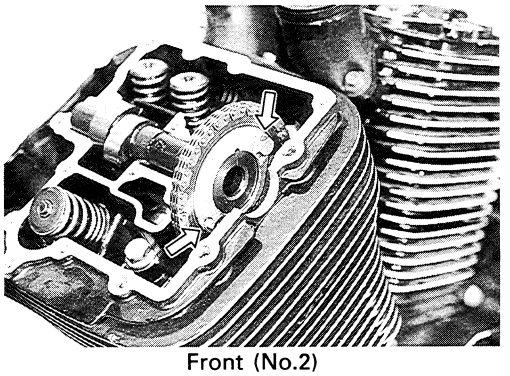

Front (No.2)

*NOTE:*
*Turn the generator rotor with a offset wrench to appear the cam sprocket bolt heads.*

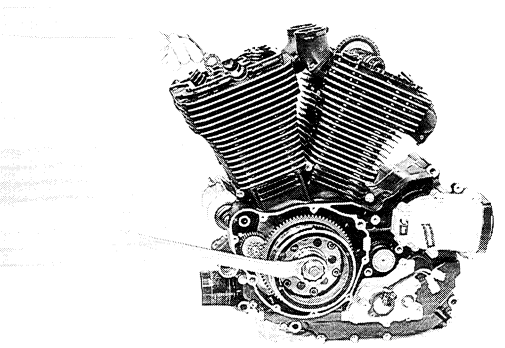

**⚠ CAUTION**

**Pull the cam chains up ward, or the chain will be caught between crankcase and the crank shaft when turning crankshaft.**

- Remove the cylinder head bolts.

*NOTE:*
*Slightly loosen the cylinder head bolts ① to facilitate later disassembly.*

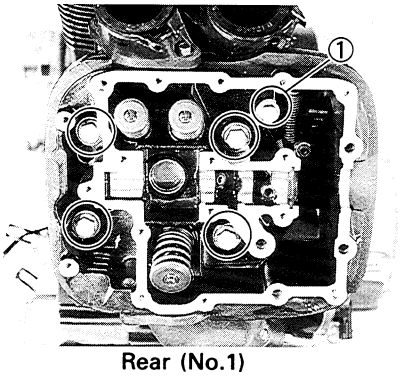


Rear (No.1)

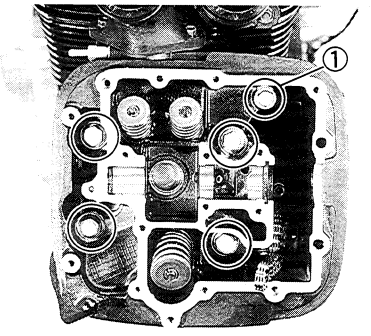


Front (No.2)

- Remove the cylinder heads and cylinders.

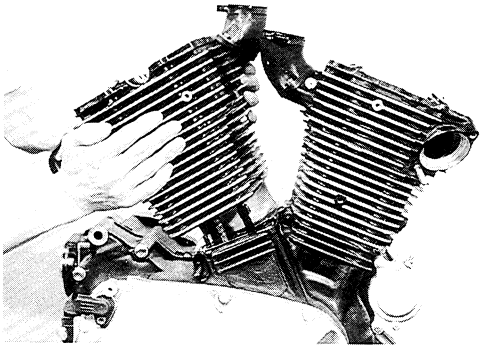

- Remove the dowel pins ②, the cylinder base gaskets ③ and the oil jets ④.

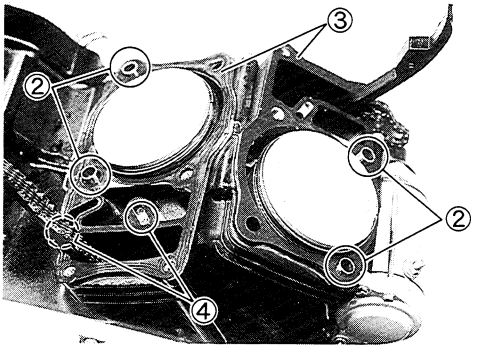

- Separate the cylinder and cylinder head in the following procedure.

*NOTE:*
*The front cylinder and cylinder head separating procedures are same as rear ones.*

- Remove the cylinder head nuts and bolt.

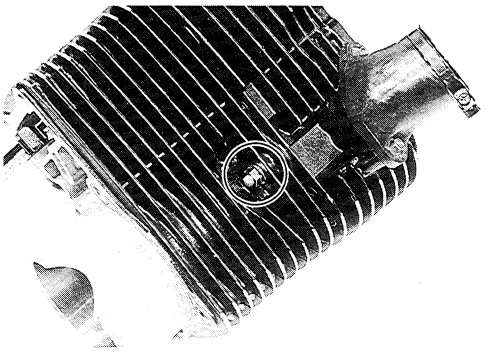

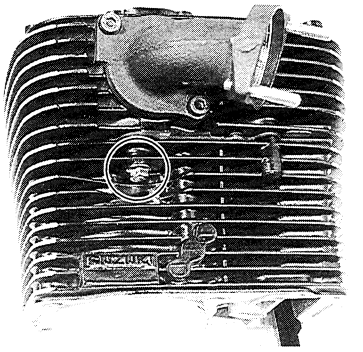

- After unlocking the ratchet, push the cam chain tension adjuster rod.
- Insert the special tool between the ratchet and the adjuster body.

**TOOL 09918-53810: Chain tensioner lock tool**

*NOTE:*
*Two chain tensioner lock tools are needed when reassembling the engine. (See p. 3-58.)*

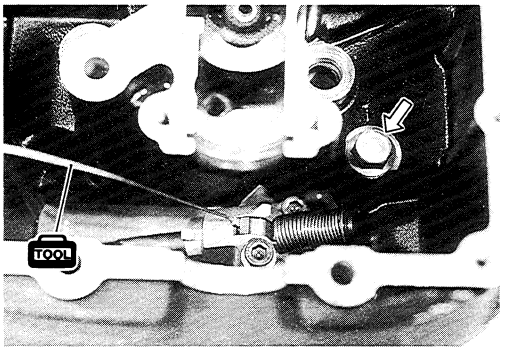


- Separate the cylinder and cylinder head.

*NOTE:*
*Refer to the section 3B for cam chain tension adjuster servicing.*

- Remove the cylinder head gaskets ①, dowel pins ② and cam chain guides ③.

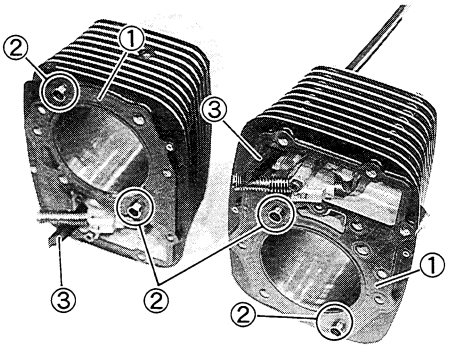


- Mark the "F" and "R" on the each piston head.

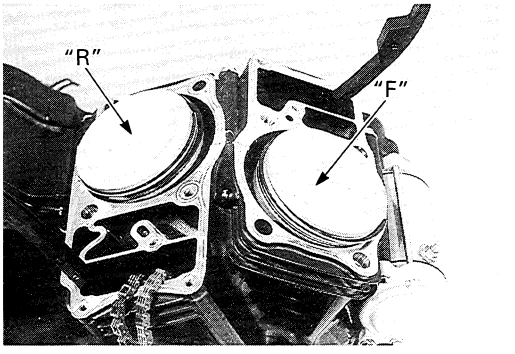

- Place a clean rag over the cylinder to prevent any parts from falling into the crankcase.
- Remove the piston pin circlip ① using long-nose pliers.
- Draw out each piston pin and remove the pistons.

*NOTE:*
*See section 3B for piston and cylinder service.*

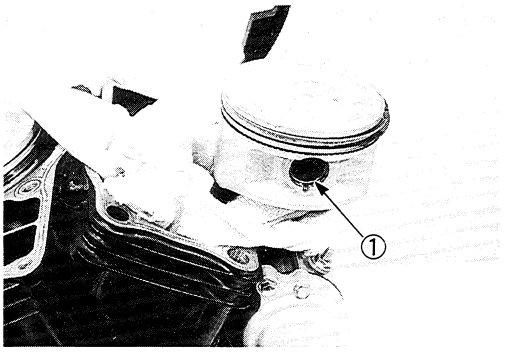


- Remove the clutch cover by removing the bolts.

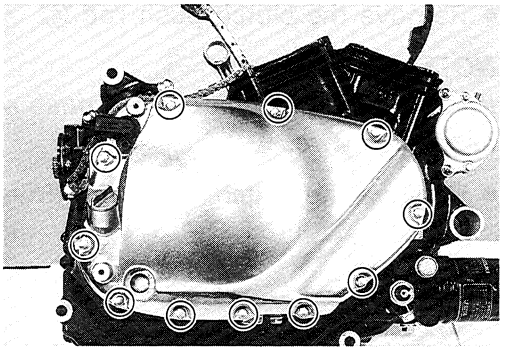

- Remove the gasket ② and dowel pins ③.

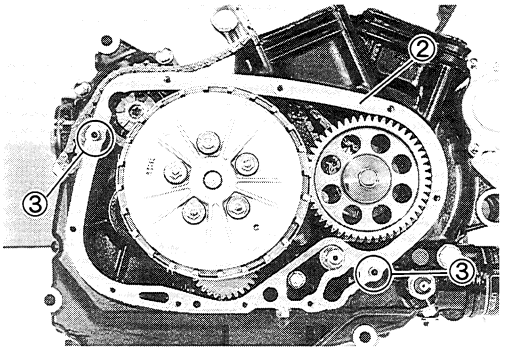


- While holding the generator rotor with a offset wrench, remove the clutch spring set bolts and springs diagonally.

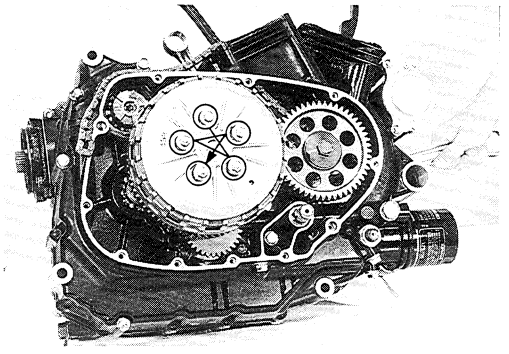

- Remove the pressure plate ④.

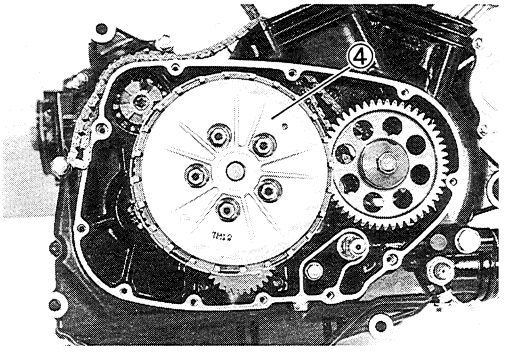

- Remove the clutch push piece ①, the bearing ② and the thrust washer ③.

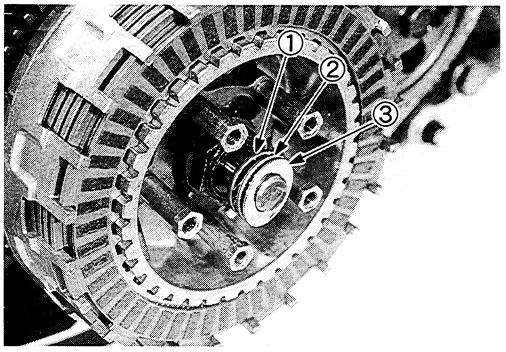


- Remove the clutch push rod ④.

*NOTE:*
*If it is difficult to pull out the push rod ④, use a magnetic hand or a wire.*

- Remove the clutch drive and driven plates.

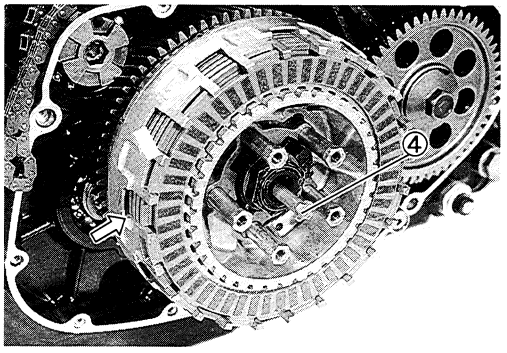


- Unlock the clutch sleeve hub nut ⑤.

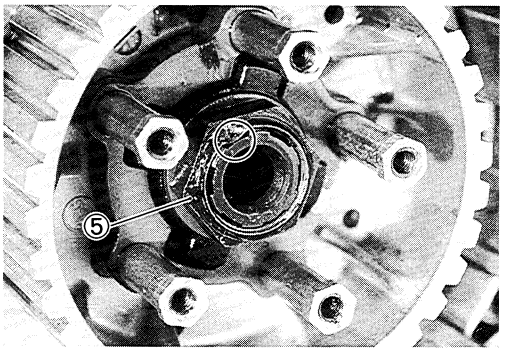


- While holding the clutch sleeve hub with the special tool, remove the clutch sleeve hub nut ⑤.

**TOOL 09920-53740: Clutch sleeve hub holder**

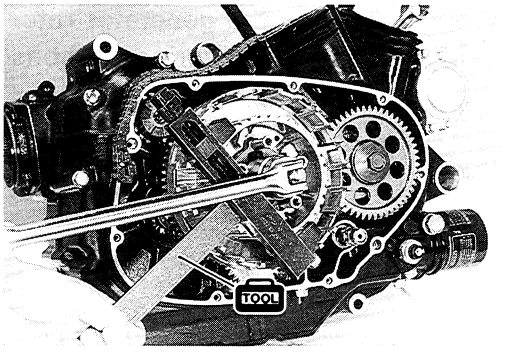


- Remove the washer ⑥.

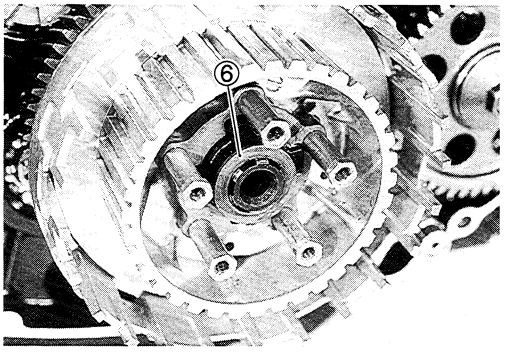

- Remove the clutch sleeve hub ① along with the clutch drive cam ② and the clutch driven cam ③.

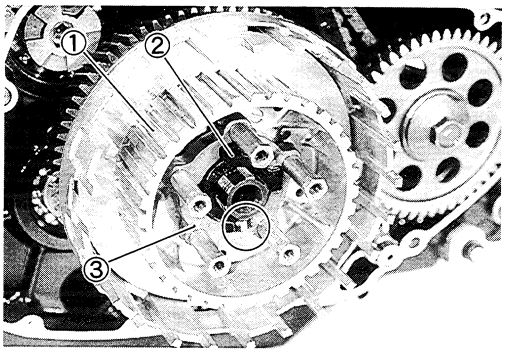


**⚠ CAUTION**

**Prior to disassembly, mark the initial position of the clutch drive and driven cam with a paint.**
**Install the clutch drive and driven cam at the initial position when assembling them.**

- Remove the clutch drive cam ② and the clutch driven cam ③ from the clutch sleeve hub ①.

*NOTE:*
*The clutch drive cam ② and the clutch driven cam ③ should be replaced as a set.*

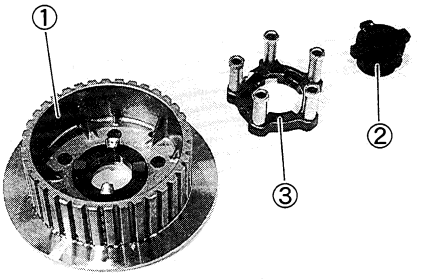


- Remove the thrust washer.
- Remove the primary driven gear assembly.

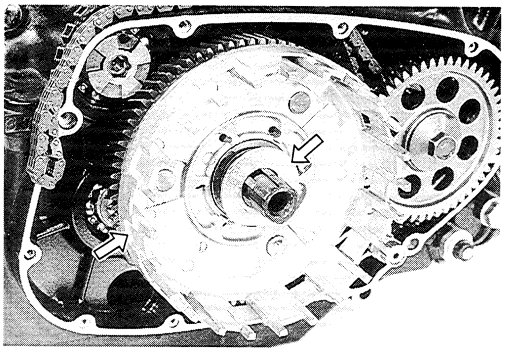

- Remove the oil pump drive gear ④ and pin ⑤ from the primary driven gear.

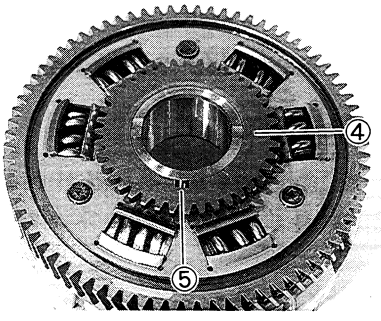


- Remove the needle roller bearing ⑥, the spacer ⑦, thrust washer ⑧ and the spacer ⑨.

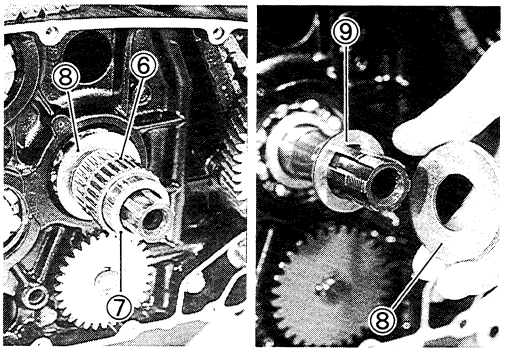

- Remove the oil pump driven gear by removing the circlip ①.

**TOOL 09900-06107: Snap ring pliers**

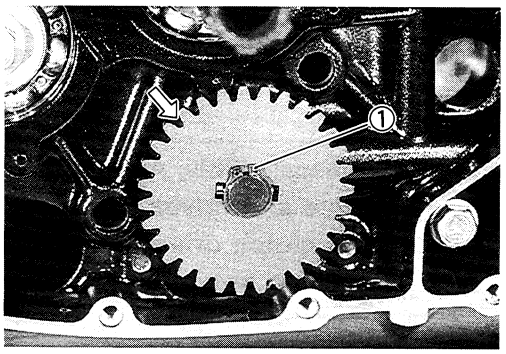


- Remove the pin ② and the washer ③.

*NOTE:*
*Do not drop the circlip, the pin ② and the washer ③.*

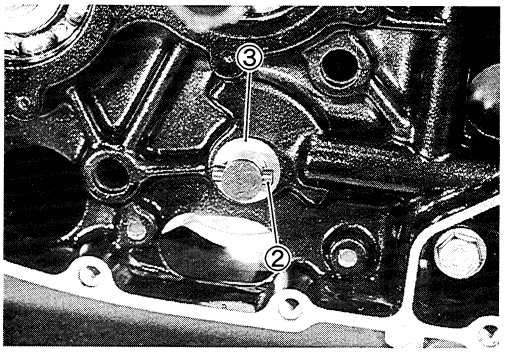


- Remove the oil pressure regulator ④.

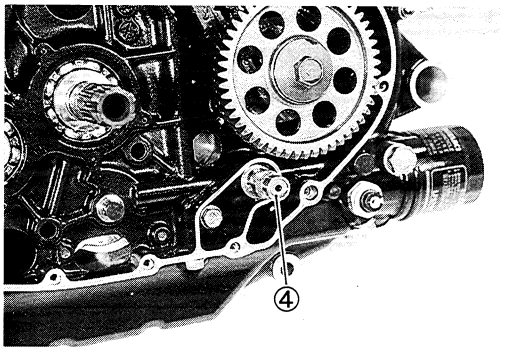


- Hold the primary drive gear by using the special tool and remove the bolt.

**TOOL 09930-40113: Rotor holder**

**⚠ CAUTION**

**This bolt has left-hand thread.**
**Turning it counter-clockwise may cause damage.**

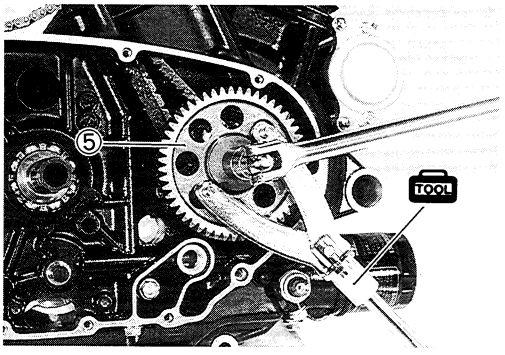


- Remove the primer drive gear ⑤.

- Remove the cam chain tensioner ⑥ and chain ⑦.

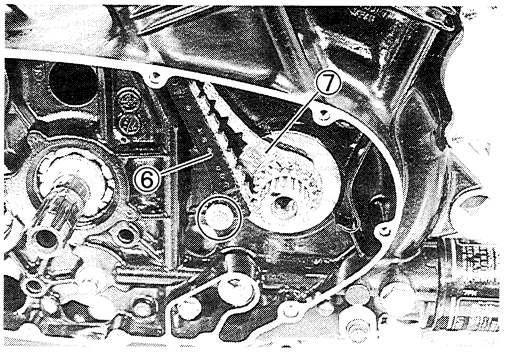

- Remove the cam chain drive sprocket and thrust washer.

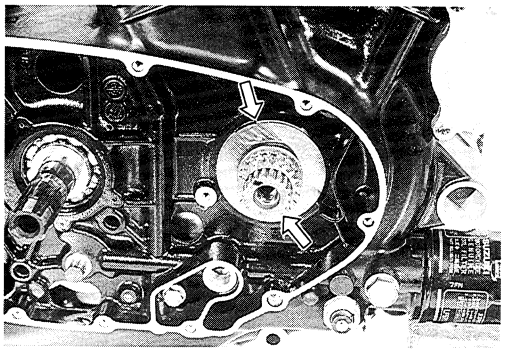

- Install the universal joint on the secondary driven gear shaft.
- While holding the universal joint with an adjustable wrench, remove the speed sensor rotor and drive shaft bolt ①.

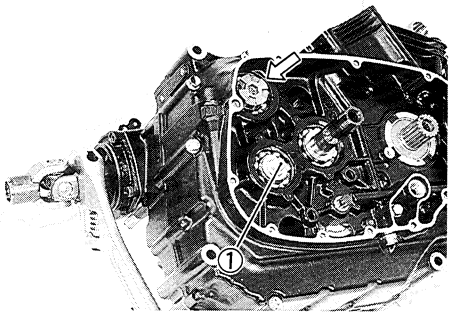


**▲ CAUTION**

**Drive shaft bolt ① has left-hand thread. Turning it counter-clockwise may cause damage.**

**TOOL 09900-18710: Hexagon socket (12 mm)**

- Remove the starter motor.

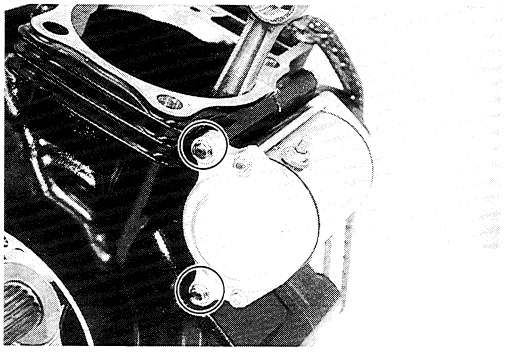

- Remove the oil filter and the oil pressure switch ②.

**TOOL 09915-40610: Oil filter wrench**

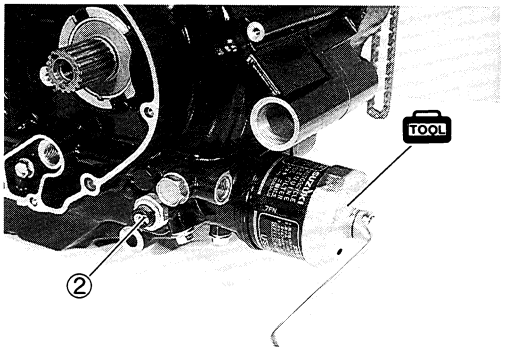


- Remove the secondary driven gear bolts.

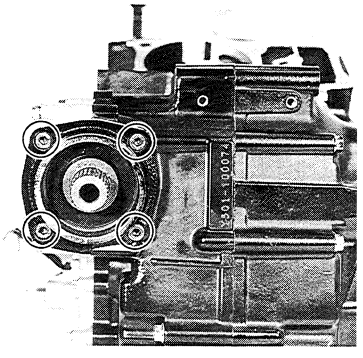

- Remove the secondary gear case by removing bolts.

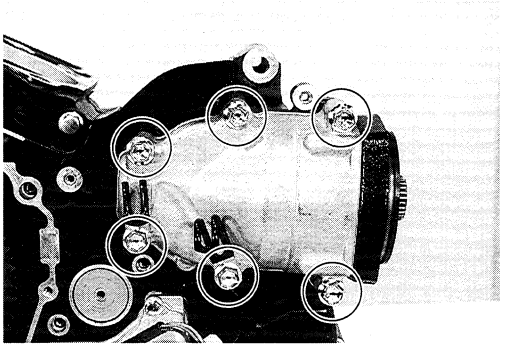

- Remove the secondary driven gear assembly ①, the bearing ②, the dowel pins ③, the oil jet ④, and the pin ⑤.

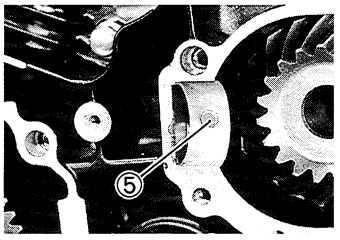


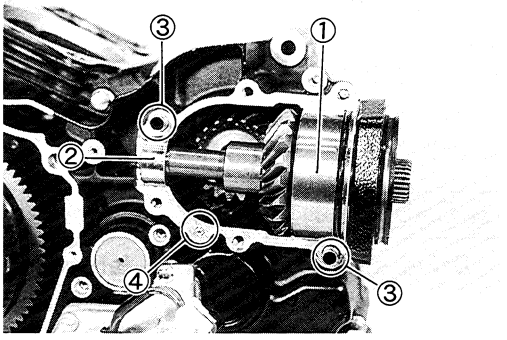


- Remove the neutral indicator light switch.

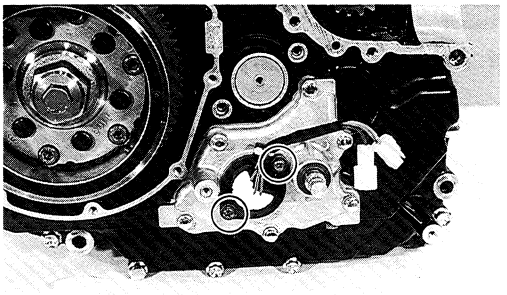

- Remove the switch contact, the spring and the O-ring.

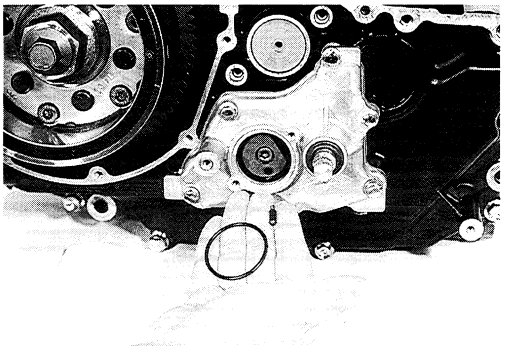

- Remove the gearshift cover.

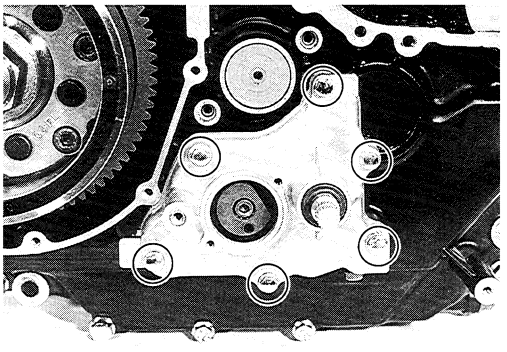

- Remove the gasket ①, the dowel pins ② and the oil jet ③.

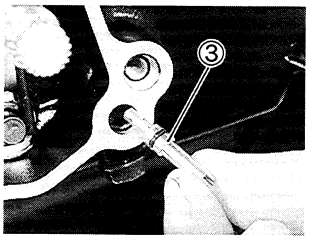


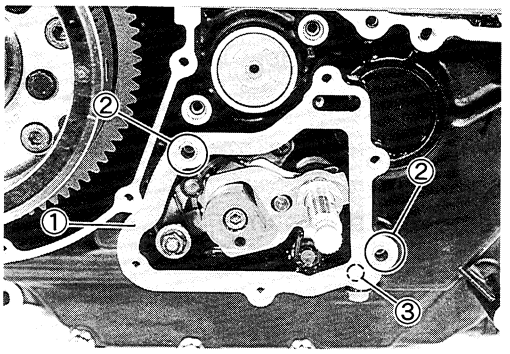


- Remove the gear shift cam retainer.

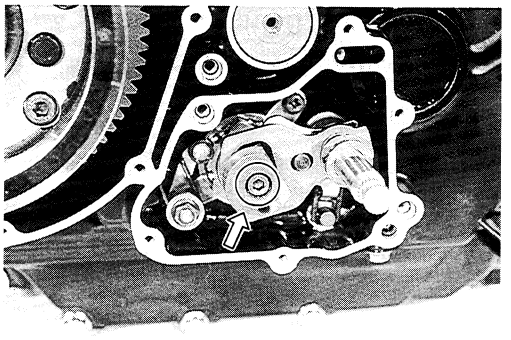

- Remove the gearshift shaft/gearshift arm ④ and the washers ⑤.

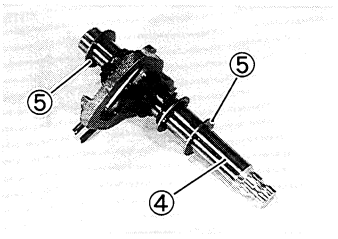


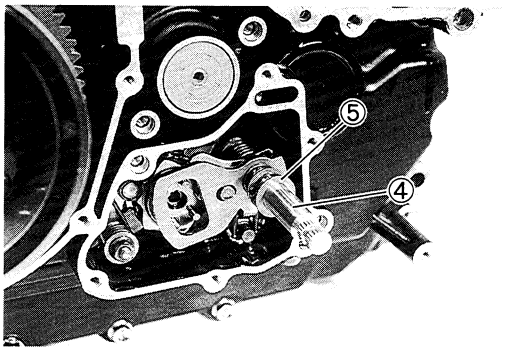


- Remove the gearshift cam plate ⑥, the gearshift cam stopper nut ⑦, the washer ⑧ and the spring ⑨.

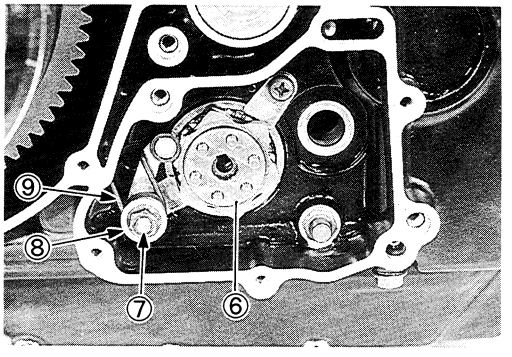


- Remove the gearshift arm stopper bolt ⑩.
- Remove the gearshift cam stopper ⑪ and the bearing retainer ⑫ by removing the gearshift cam stopper bolt.

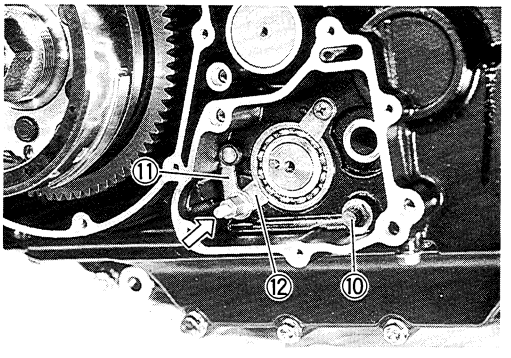

- Loosen the generator rotor bolt while holding the generator with a offset wrench.

*NOTE:*
*When loosen the rotor bolt, do not remove it. The rotor bolt is used in conjunction with the rotor remover when removing the rotor.*

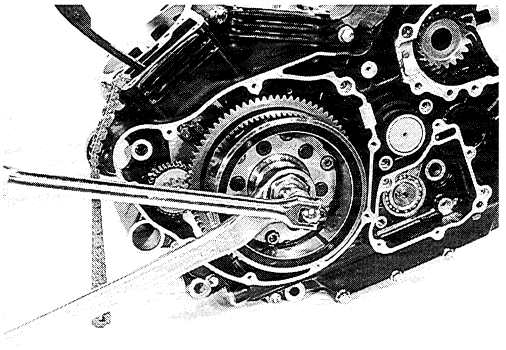

- Remove the generator rotor by using the special tool.

**TOOL 09930-30721: Rotor remover**

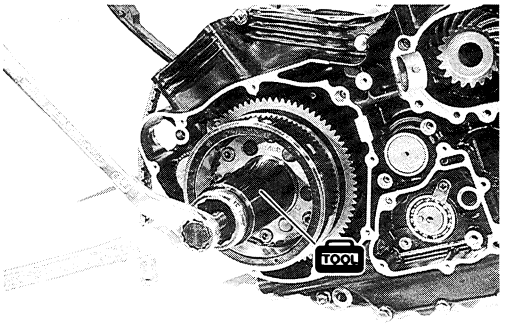


- Remove the key ① and the starter driven gear ②.

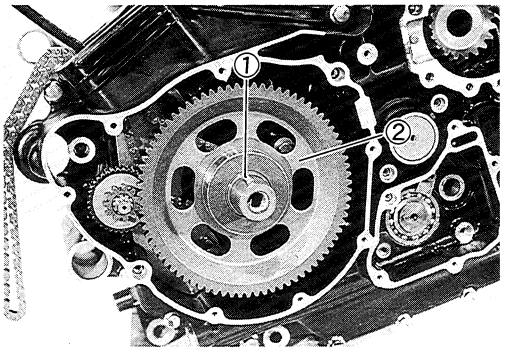


- Remove the cam chain tensioner and the chain.
- Remove the starter torque limiter and the washer.

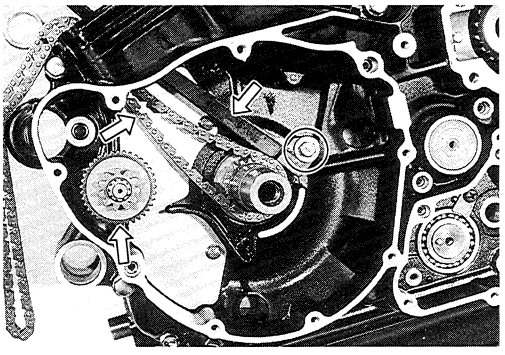

- Remove the starter torque limiter bush from the crankcase.

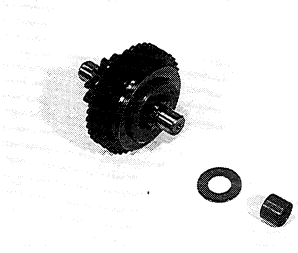

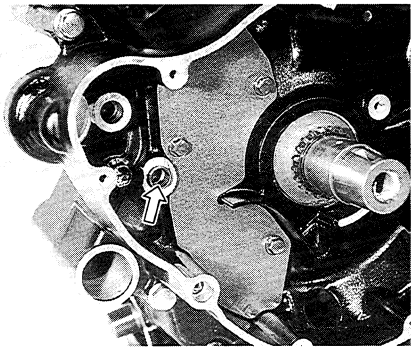

- Remove the crankcase bolts.
- Separate the crankcase into 2 parts.

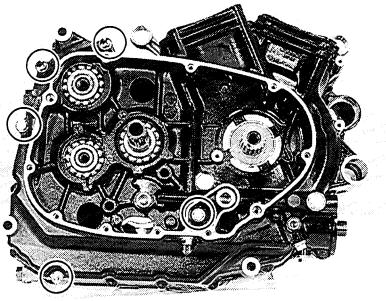

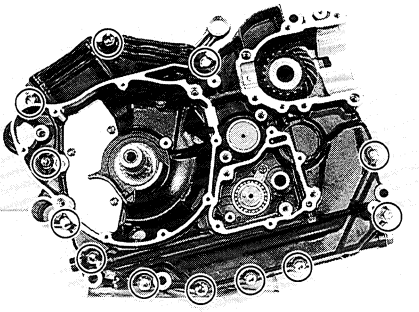

- Remove the oil pump from the right crankcase halves.

*NOTE:*
*Refer to the page 3G-1 for the oil sump filter removal.*

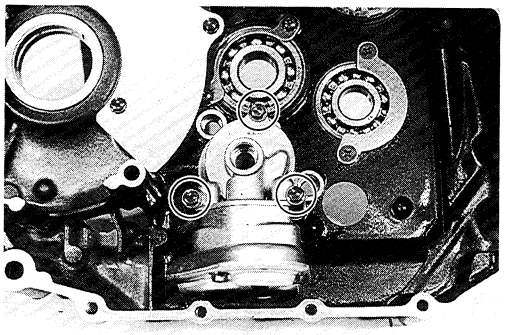

- Remove the dowel pins ① and the O-ring ②.
- Remove the crankshaft ③ with the thrust shim ④.

*NOTE:*
*Refer to the section 3F for the crankshaft and the conrods servicing.*

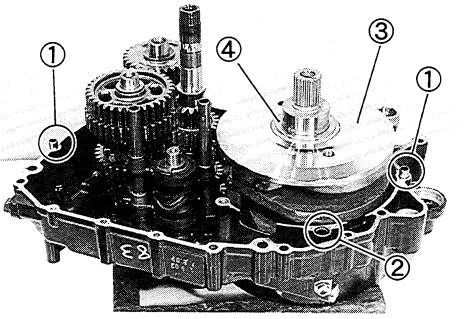


- Remove the over driving gear ⑤ with the bush ⑥.
- Remove the gearshift fork shafts ⑦ and the gearshift forks ⑧.
- Remove the gearshift cam ⑨.
- Remove the driveshaft assembly ⑩ and the countershaft assembly ⑪.

*NOTE:*
*Refer to the section 3F for the driveshaft and the countershaft servicing.*

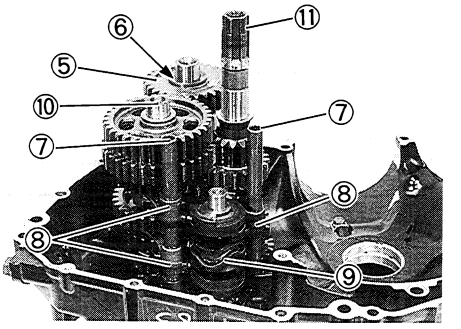

- Remove the secondary drive bevel gear by removing the its bolts and bearing retainer.
- Remove the shim(s).

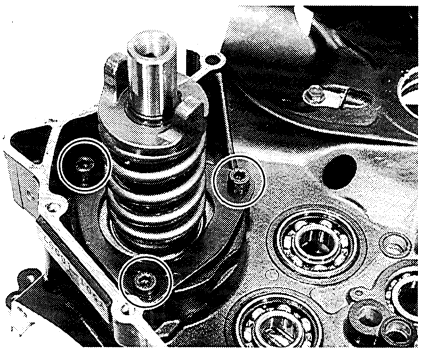

**⚠WARNING**

**Never hit the secondary bevel gear. Secondary bevel gear circlip could come off.**

- Remove the oil separators.

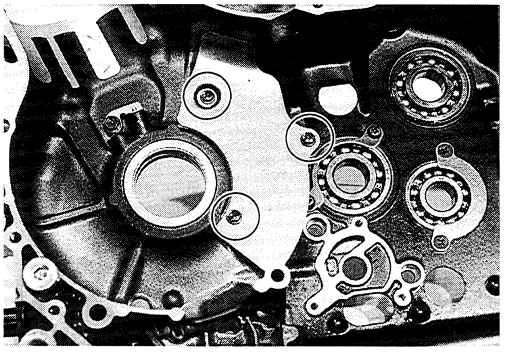

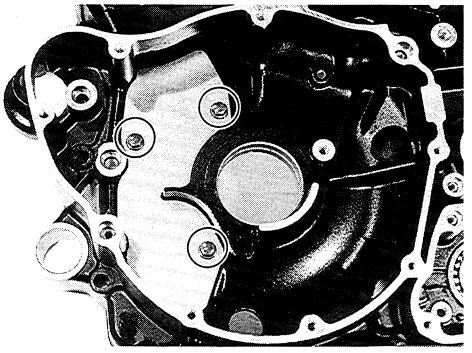

- Remove the piston cooling oil jets.

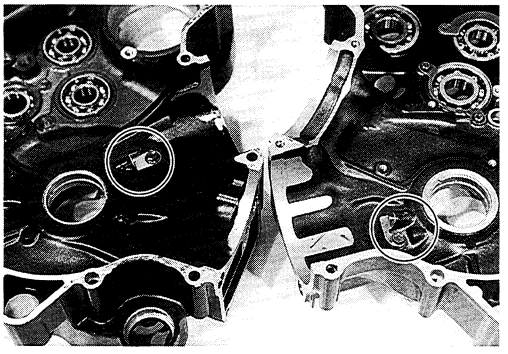

- Remove the oil seals by using a suitable bar.

**⚠ CAUTION**

**The removed oil seal must be replaced with a new one.**

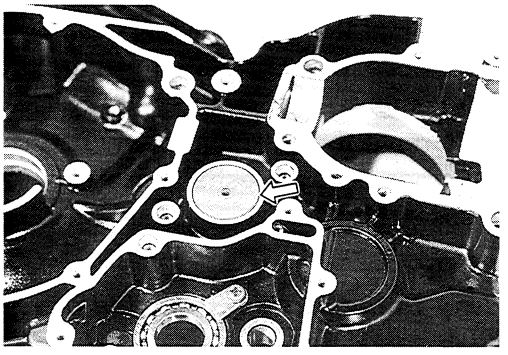

- Remove the bearing retainers.

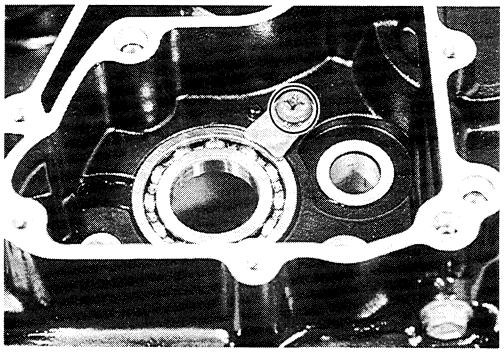

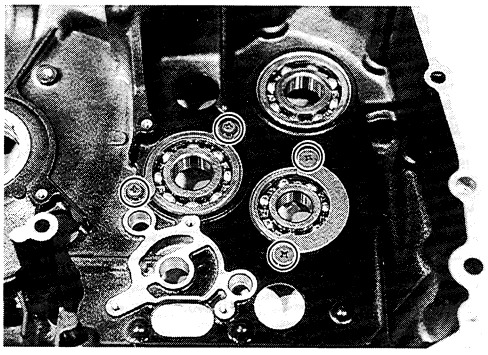

- Remove the bearings (①, ②, ③, ④, ⑤ and ⑥) by using the special tool.

**TOOL 09923-74510: Bearing remover (for ①)**
**09930-30102: Sliding shaft (for ①)**
**09913-75821: Bearing remover/installer (for ②, ③, ⑥)**
**09913-75810: Bearing remover/installer (for ④, ⑤)**

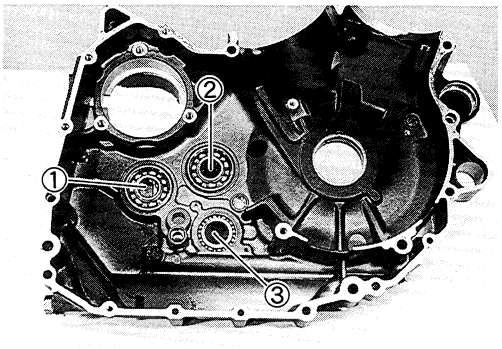


**⚠ CAUTION**

**The removed bearings must be replaced with new ones.**

*NOTE:*
*Refer to pages 3F-11 and -12 for crankshaft bearing servicing.*

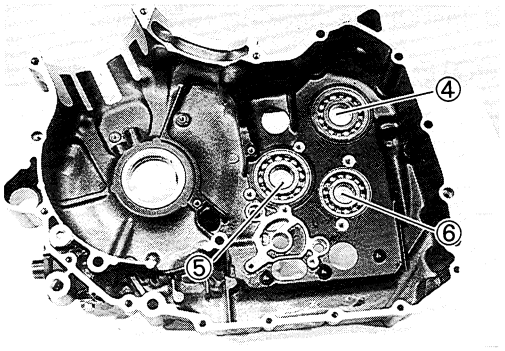

## ENGINE REASSEMBLY

Reassembled the engine in the reverse order disassembly. The following steps require special attention or precautionary measures should be taken.

*NOTE:*
*Apply engine oil to each running and sliding part before reassembling.*

- Install the bearings (①, ②, ③ ④, ⑤, and ⑥) to the crankcase by using the special tools.

**TOOL 09913-75810: Bearing remover/installer (For ①, ②, ③)**
**09913-75520: Bearing remover/installer (For ④, ⑤, ⑥)**

*NOTE:*
*The sealed side of the bearing ① and ② faces outside.*

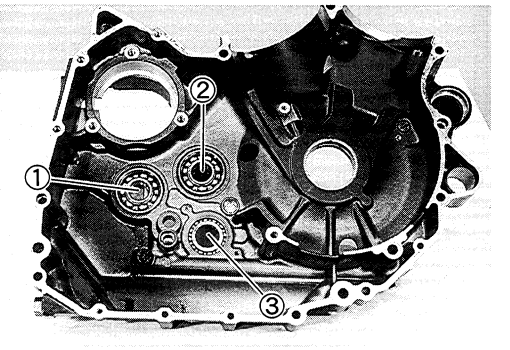


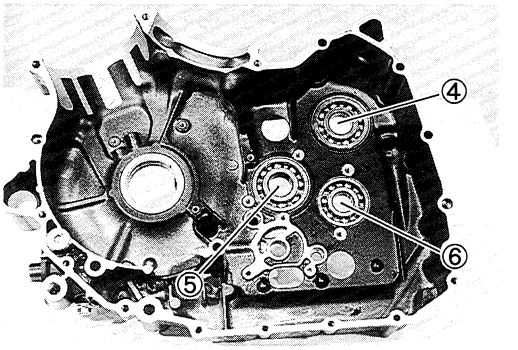


- Install the bearing retainers.

*NOTE:*
*Apply a small quantity of THREAD LOCK "1342" to the bearing retainer screws.*

**1342 99000-32050: THREAD LOCK "1342"**

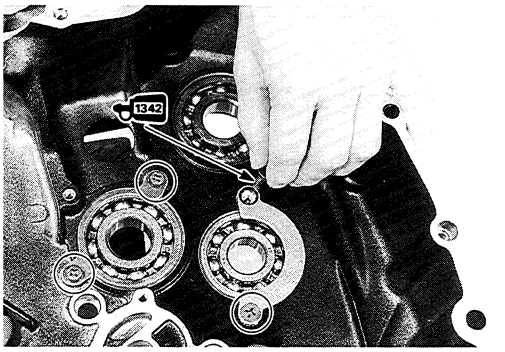


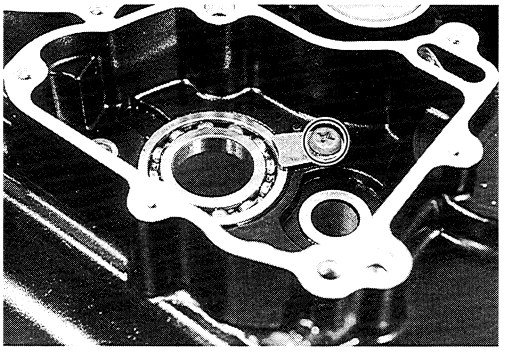

- Install the oil seal into the crankcase by using the special tools.
- Apply grease to the oil seal lip.

**09913-75810: Bearing remover/installer**

**99000-25010: SUZUKI SUPER GREASE "A"**

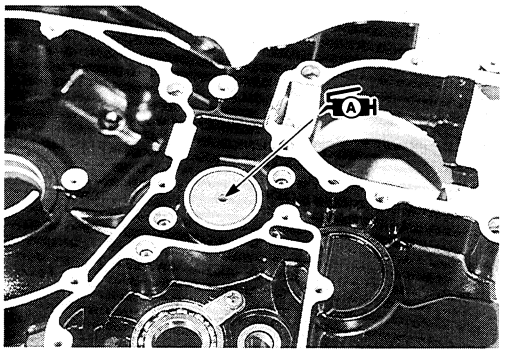

- Fit the new O-rings to each piston cooling oil jet.

**⚠ CAUTION**

**Use new O-ring to prevent the oil leakage.**

*NOTE:*
*Apply engine oil to the O-ring when installing the oil jet.*

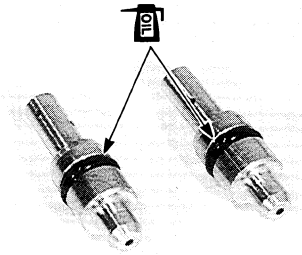

- Install the piston cooling oil jet to the left and right crankcase halves.

*NOTE:*
*Apply small quantity of the THREAD LOCK "1342" to the bolts and tighten them to the specified torque.*

**99000-32050: THREAD LOCK "1342"**

**Piston cooling oil jet plate bolt: 10 N·m (1.0 kg-m, 7.0 lb-ft)**

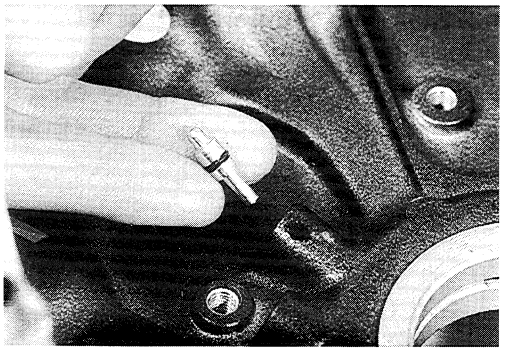

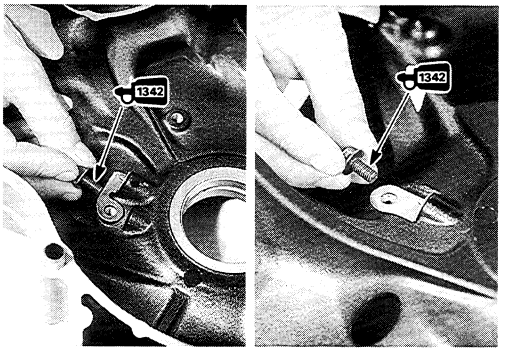

- Install the oil separator, to the left and right crankcase halves.

*NOTE:*
*Apply small quantity of the THREAD LOCK "1342" to the bolts and tighten them to the specified torque.*

**99000-32050: THREAD LOCK "1342"**

**Oil separator bolts: 10 N·m (1.0 kg-m, 7.0 lb-ft)**

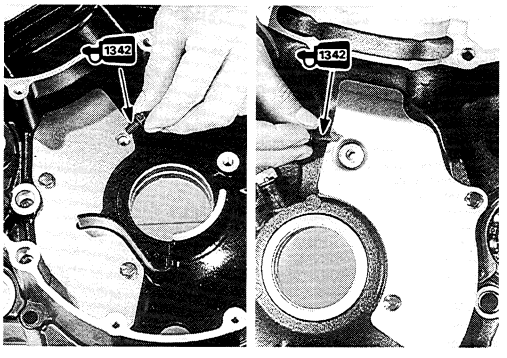

- Install the secondary drive bevel gear assembly and shim(s).

*NOTE:*
*Refer to the pages 4-6 through -9 for the shim selection.*

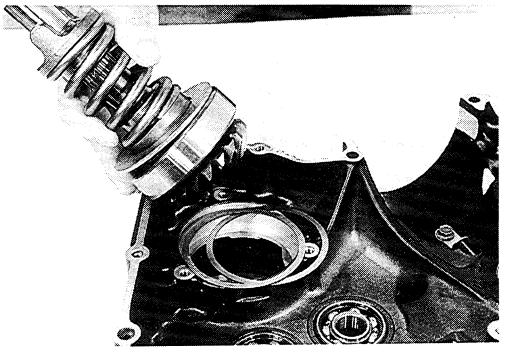

- Tighten the secondary drive bevel gear bearing retainer bolts to the specified torque.

*NOTE:*
*Apply the THREAD LOCK SUPER "1303" to the thread of bolts.*

**1303 99000-32030: THREAD LOCK SUPER "1303"**

**Secondary drive gear bearing retainer bolt: 23 N·m (2.3 kg-m, 16.5 lb-ft)**

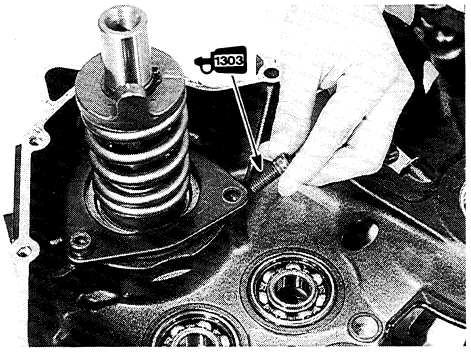


- Install the countershaft assembly ② and driveshaft assembly ③.
- Install the washer ④ to the driveshaft.
- Install the over driving gear ① and bush.

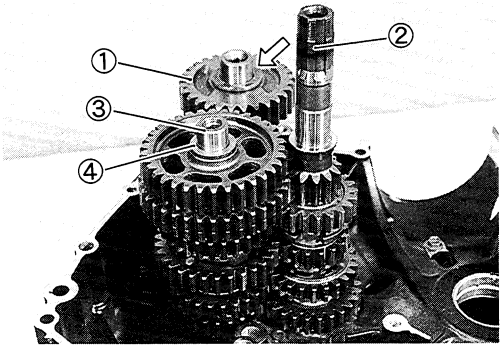


- Install the gearshift forks (⑤, ⑥, ⑦), gearshift fork shafts (⑧, ⑨) and gearshift cam ⑩.

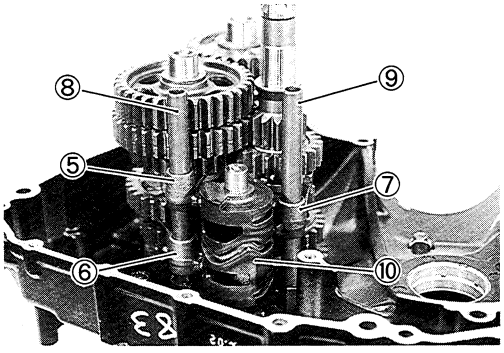


⑤ For 3rd driven gear
⑥ For 4th driven gear
⑦ For 2nd drive gear

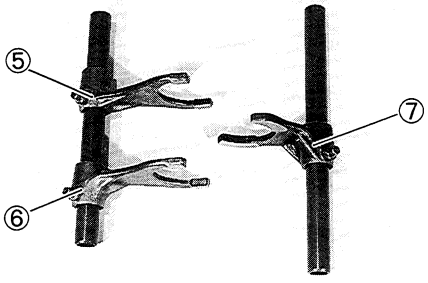

- Install the thrust shim ① on the crankshaft.

*NOTE:*
** The grooved face Ⓐ of thrust shim ① faces to crankshaft web side.*
** The thrust shim is selected by the crankshaft thrust clearance. (See pp. 3F-12 and -13.)*

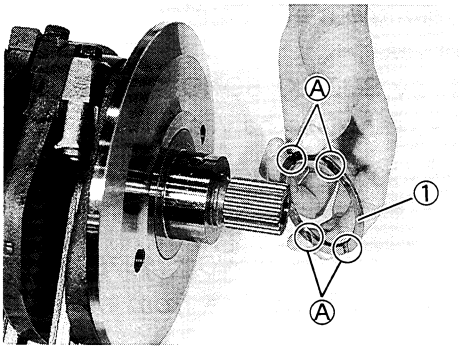


- Install the crankshaft into the left crankcase half.

*NOTE:*
*Coat lightly moly paste to the crankshaft journal bearings and the thrust shim.*

**99000-25140: SUZUKI MOLY PASTE**

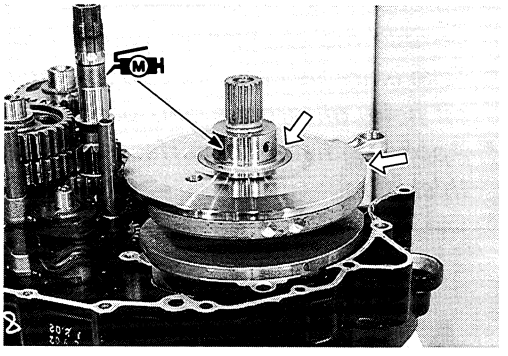

**⚠ CAUTION**

**Never strike the crankshaft with a plastic hammer when inserting it into the crankcase. It will be easy to install the crankshaft to left crankcase.**

- Install the dowel pins and O-ring on the left crankcase half.

*NOTE:*
*Apply grease to the O-ring.*

**99000-25010: SUZUKI SUPER GREASE "A"**

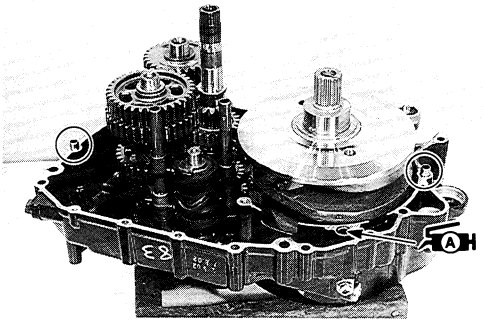

**⚠ CAUTION**

**Use the new O-ring to prevent oil leakage.**

- Install the oil pump ② to the right crankcase half.

*NOTE:*
*Apply a small quantity of THREAD LOCK "1342" to the oil pump mounting bolts and tighten them to the specified torque.*

**99000-32050: THREAD LOCK "1342"**

**Oil pump mounting bolt: 10 N·m (1.0 kg-m, 7.0 lb-ft)**

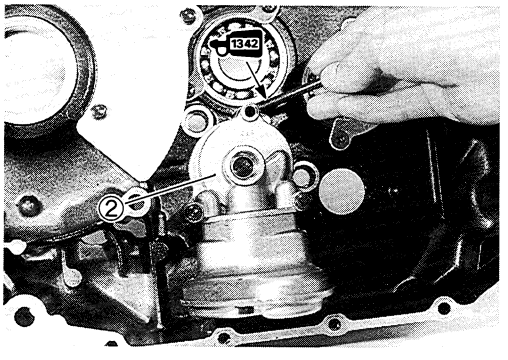

- Clean the mating surfaces of the left and right crankcase halves.
- Apply SUZUKI BOND "1207B" to the mating surface of the crankcase halves.

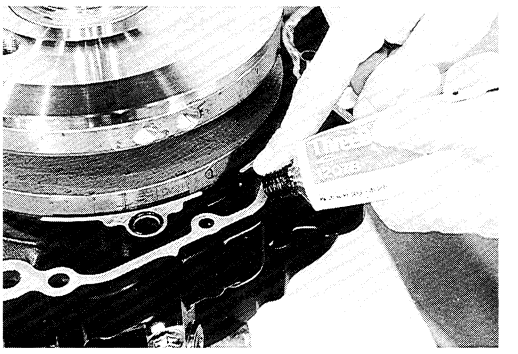

**1207B 99000-31140: SUZUKI BOND "1207B"**

*NOTE:*
*Use of SUZUKI BOND "1207B" is as follows:*
* *Make surfaces free from moisture, oil, dust and other foreign materials.*
* *Spread on surfaces thinly to form an even layer, and assemble the crankcases within few minutes.*
* *Take extreme care not to apply any BOND "1207B" to the oil hole, oil groove and bearing.*
* *Apply to distorted surfaces as it forms a comparatively thick film.*

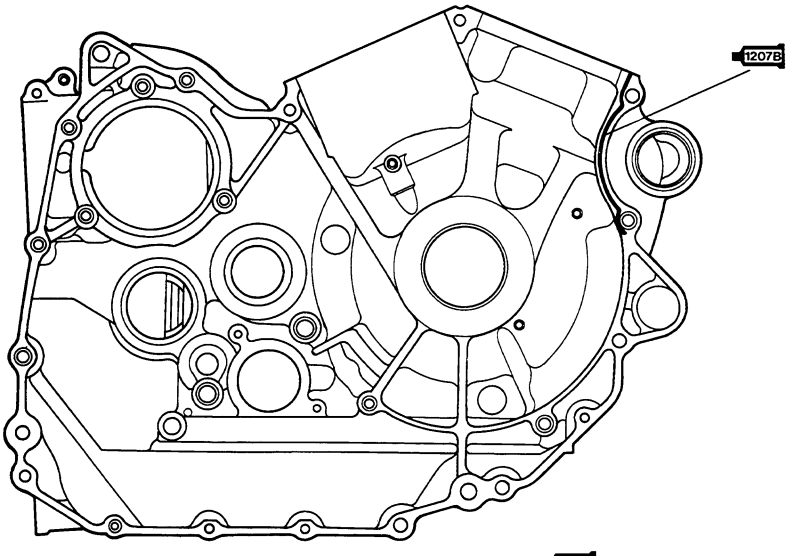


Left crankcase

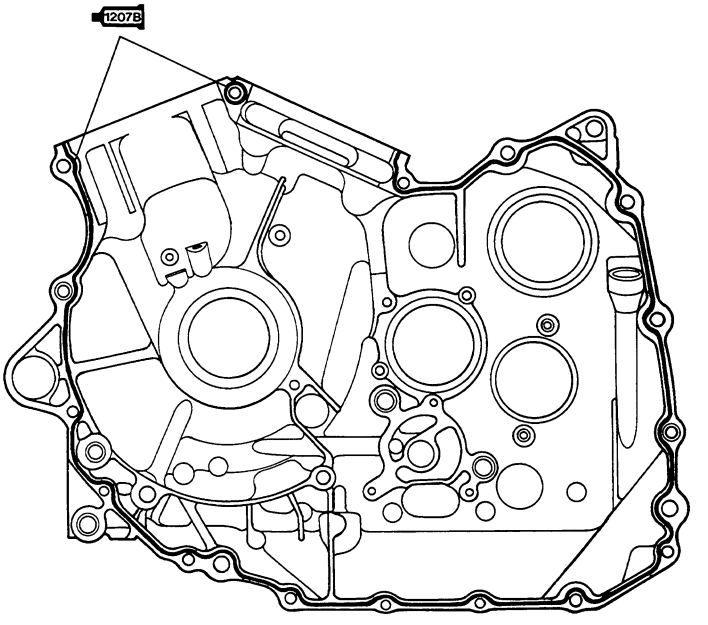


Right crankcase

- When securing the right and left crankcase halves, tighten each bolt a little at a time to equalize the pressure. Tighten all the securing bolts to the specified torque values.

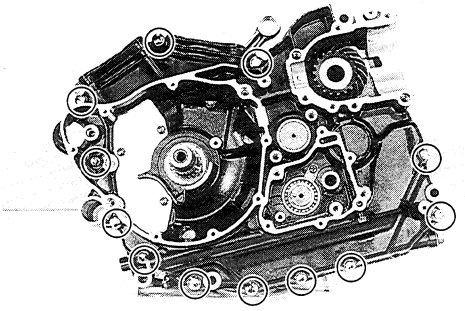

**Crankcase 8mm bolt: (Initial) 10 N·m (1.0 kg-m, 7.0 lb-ft)**
**(Final) 22 N·m (2.2 kg-m, 16.0 lb-ft)**
**Crankcase 6mm bolt: 11 N·m (1.1 kg-m, 8.0 lb-ft)**

**⚠ CAUTION**

**Do not drop the O-ring into the crankcase when assembling the right and left crankcase halves.**

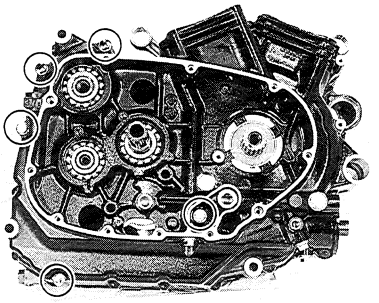

*NOTE:*
*After the crankcase bolts have been tightened, check if the crankshaft, secondary drive bevel gear shaft, countershaft and the driveshaft rotate smoothly.*

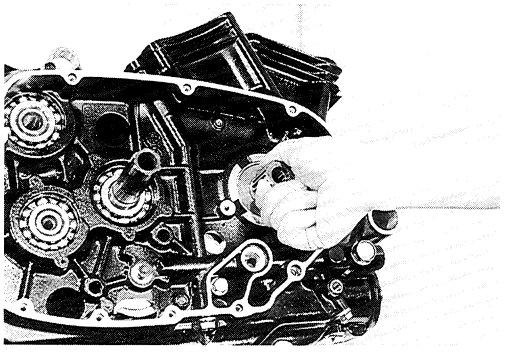

- Install the bush ① into the crankcase.

*NOTE:*
*Apply engine oil and SUZUKI MOLY PASTE to the inside of the bushes.*

**99000-25140: SUZUKI MOLY PASTE**

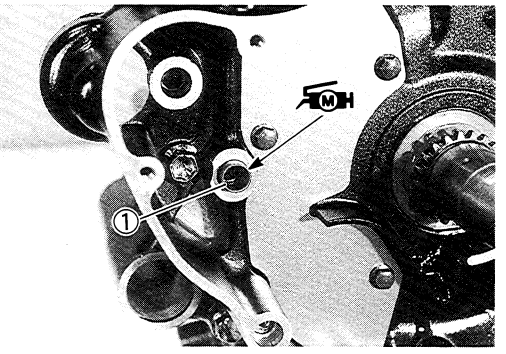


- Install the starter torque limiter ② and the washer.

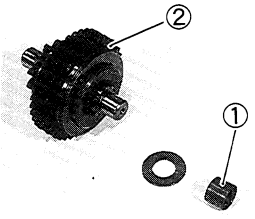


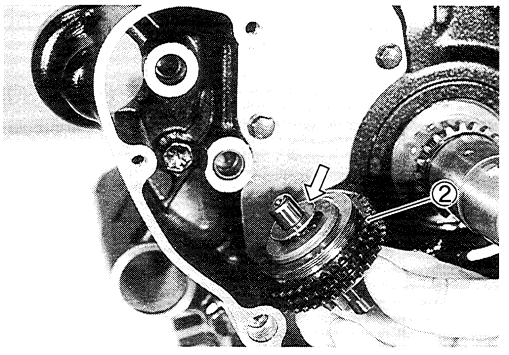

- Install the cam chain tensioner ① and cam chain ②.
- Apply a small quantity of THREAD LOCK "1342" to the cam chain tensioner bolt ③ and tighten it to the specified torque.

**1342 99000-32050: THREAD LOCK "1342"**

**Cam chain tensioner bolt: 10 N·m (1.0 kg-m, 7.0 lb-ft)**

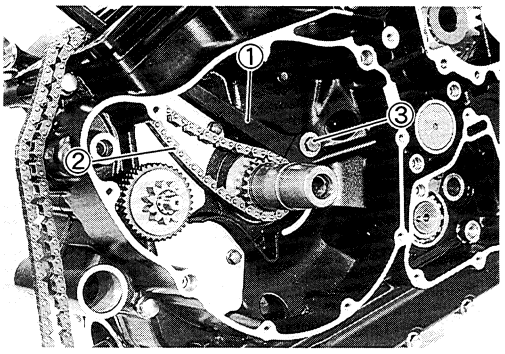


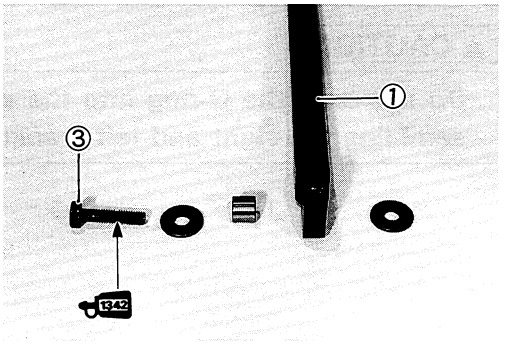


- Install the starter driven gear ④ onto the crankshaft.
- Degrees the tapered portion of the generator rotor assembly and also the crankshaft. Use nonflammable cleaning solvent to wipe off the oily or greasy matter to make these surfaces completely dry.

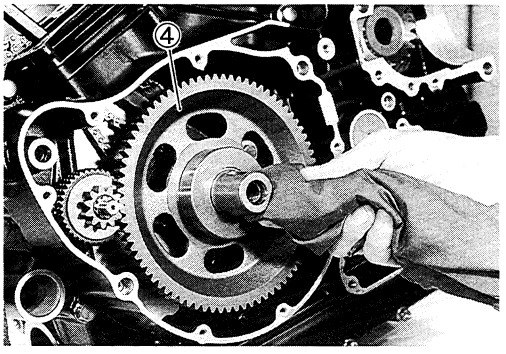


- Install the key ⑤ in the key slot on the crankshaft completely.

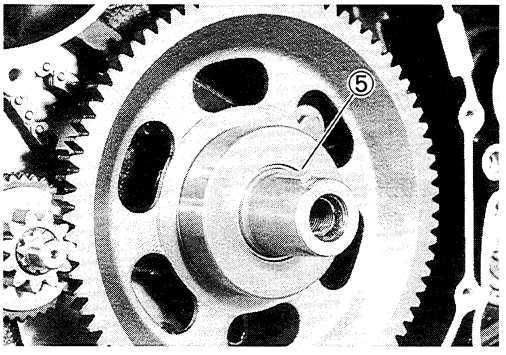


- Install the generator rotor assembly ⑥ onto the crankshaft.
- Apply THREAD LOCK SUPER "1303" to the rotor bolt ⑦ and install it.

**1303 99000-32030: THREAD LOCK SUPER "1303"**

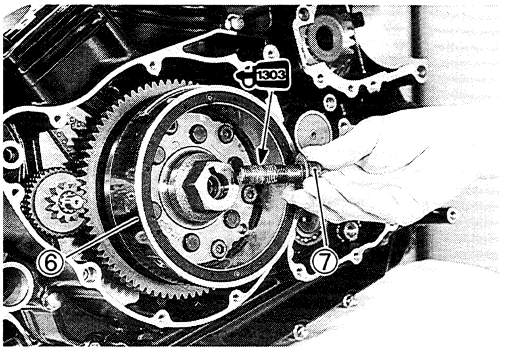

- While holding the generator rotor with a offset wrench, tighten its bolt ① to the specified torque.

**Generator rotor bolt: 160 N·m (16.0 kg-m, 115.5 lb-ft)**

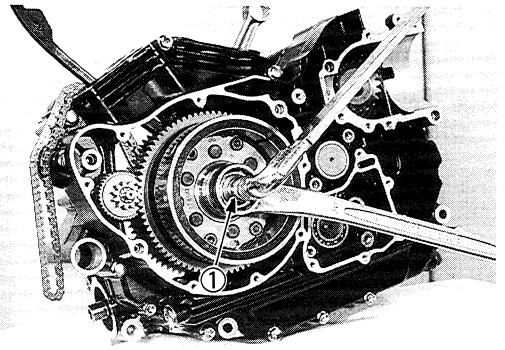


- Apply a small quantity of THREAD LOCK SUPER "1303" to the gearshift arm stopper bolt ② and tighten it to the specified torque.

**1303 99000-32030: THREAD LOCK SUPER "1303"**

**Gearshift arm stopper bolt: 23 N·m (2.3 kg-m, 16.5 lb-ft)**

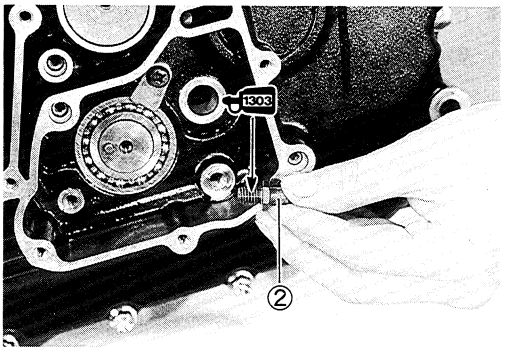


- Install the gearshift cam stopper ③, its bolt ④ and the bearing retainer ⑤.

*NOTE:*
*Apply a small quantity of THREAD LOCK "1342" to the bolt ④ and tighten it to the specified torque.*

**1342 99000-32050: THREAD LOCK "1342"**

**Gearshift cam stopper bolt: 10 N·m (1.0 kg-m, 7.0 lb-ft)**

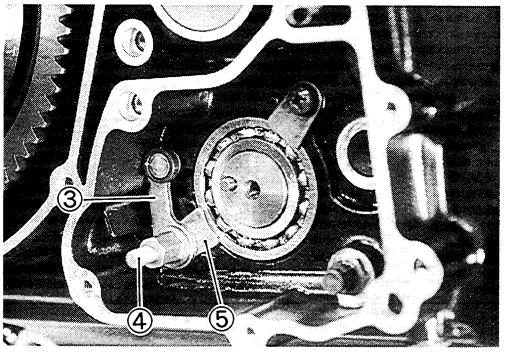


- Install the gearshift cam stopper nut ⑥, the washer ⑦ and the return spring ⑧.

*NOTE:*
*Apply a small quantity of THREAD LOCK "1342" to the nut ⑥ and tighten the nut to the specified torque.*

**1342 99000-32050: THREAD LOCK "1342"**

**Gearshift cam stopper nut: 10 N·m (1.0 kg-m, 7.0 lb-ft)**

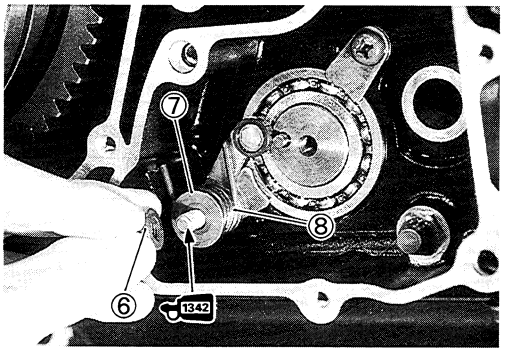


- Confirm the gearshift cam stopper movement.

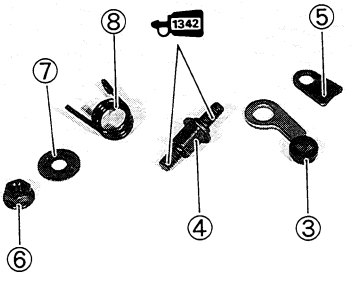

- Check the neutral position.
- Install the gearshift cam stopper plate after aligning the gearshift cam pins Ⓐ with the gearshift cam stopper plate holes Ⓑ.

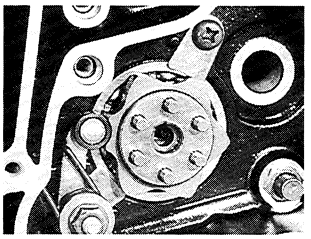

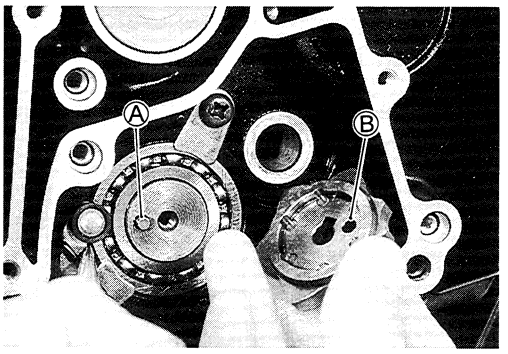


- Install the gearshift shaft/gearshift arm ① with the washers ② as shown in the photograph.

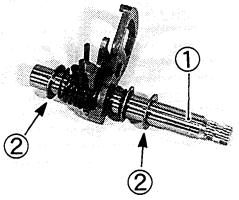


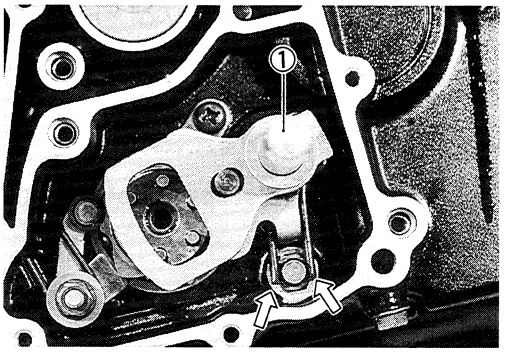


- Install the gearshift cam retainer after aligning the portion Ⓒ with the gearshift cam stopper plate groove Ⓓ.
- Apply a small quantity of THREAD LOCK "1342" to the gearshift cam stopper retainer bolt and tighten it to the specified torque.

**1342 99000-32050: THREAD LOCK "1342"**

**Gearshift cam stopper retainer bolt: 10 N·m (1.0 kg-m, 7.0 lb-ft)**

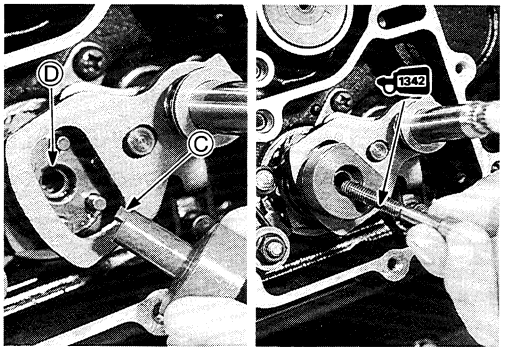


- Fit the new O-ring to the oil jet (#14).

**⚠ CAUTION**

**Use the new O-ring to prevent oil leakage.**

- Install the oil jet as shown.

*NOTE:*
*Apply engine oil to the O-ring when installing the oil jet.*

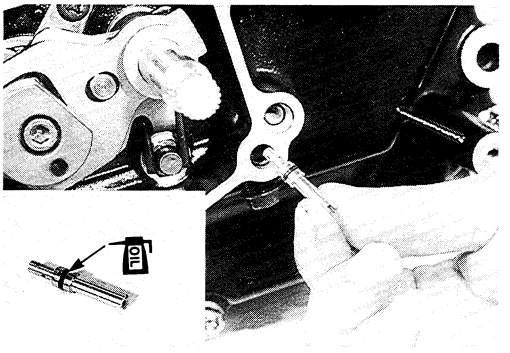


- Install the dowel pins ③ and the gasket ④.

**⚠ CAUTION**

**Use new gasket to prevent oil leakage.**

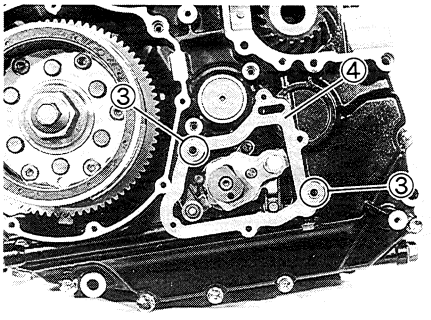

- Install the gearshift cover.

*NOTE:*
*Fit the new gasket washer to the bolt ① as shown.*

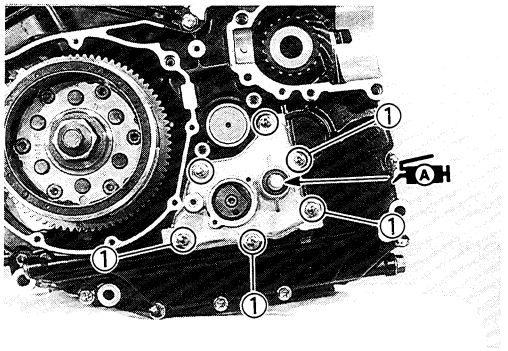


**⚠ CAUTION**

**Use the new gasket washer to prevent oil leakage.**

*NOTE:*
*Apply grease to the oil seal lip before installing the gear shift cover.*

**99000-25010: SUZUKI SUPER GREASE "A"**

- Install the spring ② and the switch contact ③.
- Install the O-ring ④.

*NOTE:*
*Apply grease to the O-ring ④.*

**99000-25010: SUZUKI SUPER GREASE "A"**

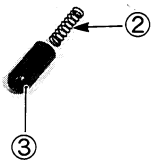


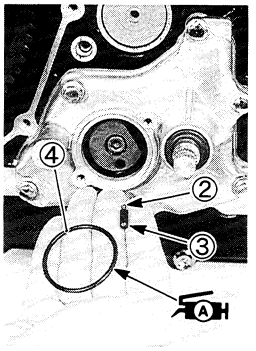


- Install the neutral indication light switch ⑤ as shown.

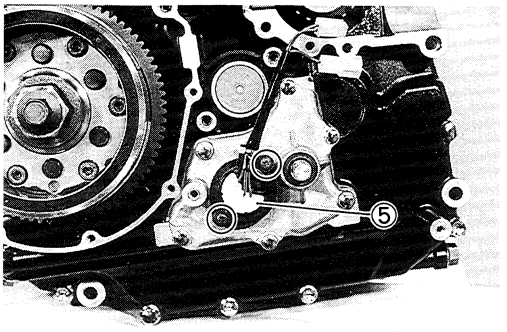


- Install the secondary bevel driven gear bearing and the pin ⑥.

*NOTE:*
*Align the hole Ⓐ of the secondary bevel driven gear bearing with the pin ⑥.*

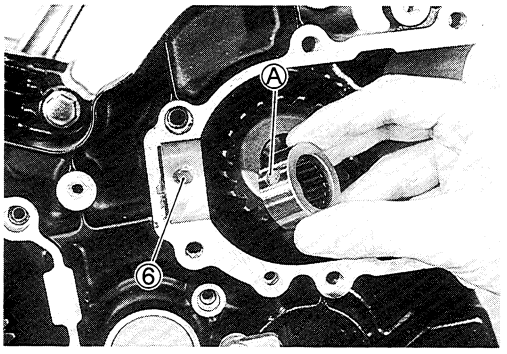


- Install the secondary driven bevel gear assembly ⑦, shim(s) ⑧ and O-ring ⑨.

**⚠ CAUTION**

**Use the new O-ring to prevent oil leakage.**

*NOTE:*
** Refer to the section 4 for shim selection.*
** Apply grease to the O-ring.*

**99000-25010: SUZUKI SUPER GREASE "A"**

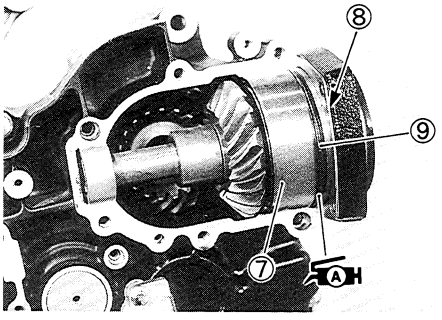

- Fit the new O-ring to the oil jet (#14).

**⚠ CAUTION**

**Use the new O-ring to prevent oil leakage.**

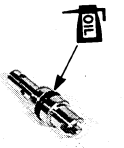


*NOTE:*
*Apply engine oil to the O-ring when installing the oil jet.*

- Install the oil jet as shown.

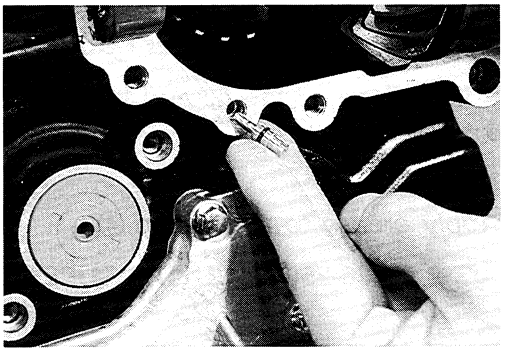

- Install the dowel pins.

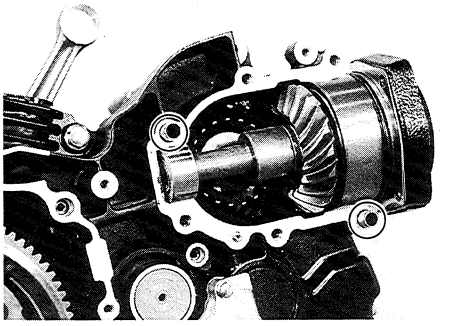

- Clean the mating surfaces of the crankcase and the secondary gear case.
- Apply SUZUKI BOND "1207B" to the mating surface of the secondary gear case.

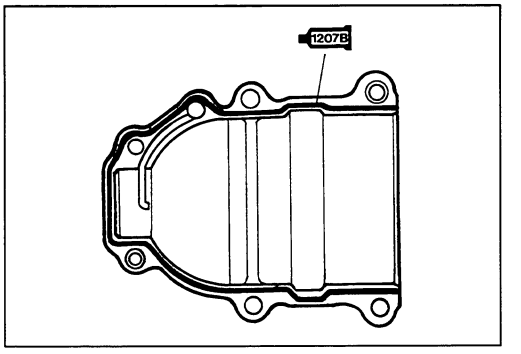


**1207B 99000-31140: SUZUKI BOND "1207B"**

*NOTE:*
*Use of SUZUKI BOND "1207B" is as follows:*
* *Make surfaces free from moisture, oil, dust and other foreign materials.*
* *Spread on surfaces thinly to form an even layer, and assemble the crankcases within few minutes.*
* *Take extreme care not to apply any BOND "1207B" to the oil hole, oil groove and bearing.*
* *Apply to distorted surfaces as it forms a comparatively thick film.*

- Tighten the secondary gear case bolts to the specified torque.

**Secondary gear case bolt (Initial): 10 N·m (1.0 kg-m, 7.0 lb-ft)**
**(Final): 22 N·m (2.2 kg-m, 16.0 lb-ft)**

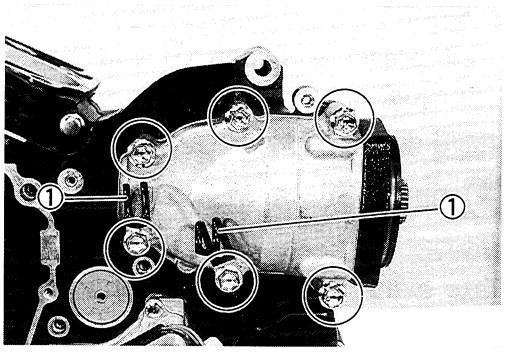


*NOTE:*
*Fit the clamps ① as shown.*

- Tighten the secondary driven bevel gear bolt to the specified torque.

*NOTE:*
* *Hollow portion Ⓐ of the secondary driven gear assembly faces inside.*
* *Apply a small quantity of THREAD LOCK SUPER "1303" to the bolt.*

**99000-32030: THREAD LOCK SUPER "1303"**

**Secondary driven bevel gear bolt: 23 N·m (2.3 kg-m, 16.5 lb-ft)**

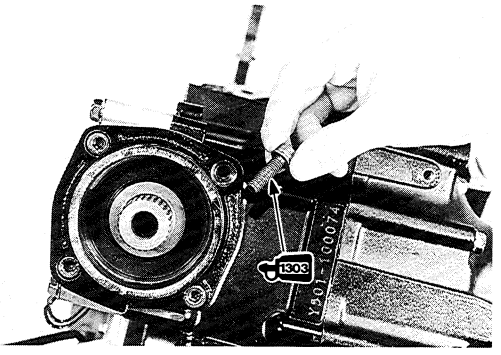


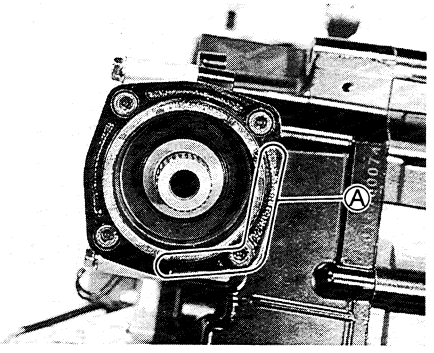


- Apply engine oil lightly to the gasket of the oil filter before installation.
- Install the oil filter turning it by hand until feeling that the filter gasket contacts the mounting surface. Then tighten it 2 turns using the oil filter wrench.

**09915-40610: Oil filter wrench**

*NOTE:*
*To properly tighten the filter, use the special tool. Never tighten the filter by hand.*

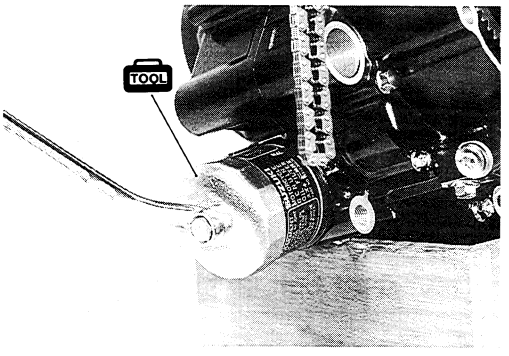


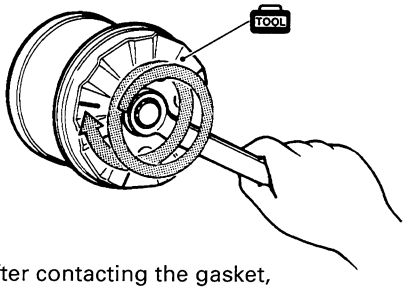


After contacting the gasket, tighten 2 turns.

- Apply SUZUKI BOND "1207B" to the thread part of the oil pressure switch ① and tighten it to the specified torque.

**1207B 99000-31140: SUZUKI BOND "1207B"**

**Oil pressure switch: 14 N·m (1.4 kg-m, 10.0 lb-ft)**

*NOTE:*
*Take extreme care not to apply any BOND "1207B" to the oil hole.*

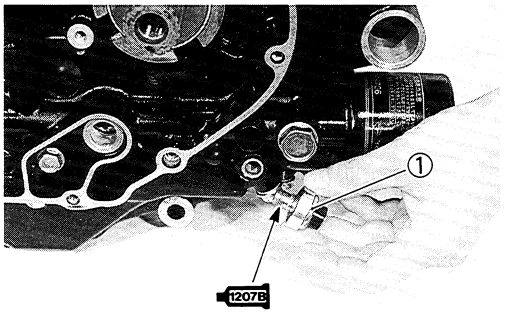


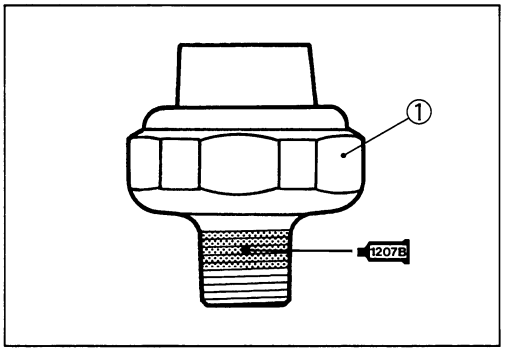


- Install the new O-ring to the starter motor.

**CAUTION**

**Use the new O-ring to prevent oil leakage.**

- Apply grease to the O-ring.

**A 99000-25010: SUZUKI SUPER GREASE "A"**

- Install the starter motor.
- Tighten the starter motor mounting bolt securely.

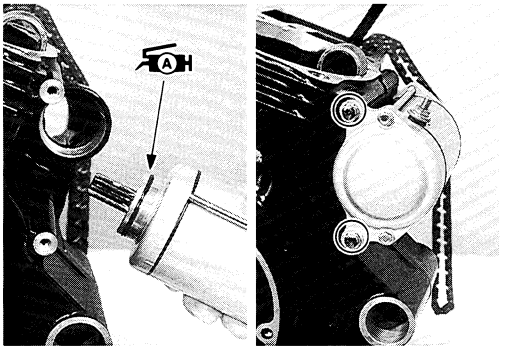


- Install the universal joint on the secondary driven gear shaft.
- While holding the universal joint with a adjustable wrench, tighten the speed sensor rotor bolt and the driveshaft bolt ② to the specified torque.

**CAUTION**

**Driveshaft bolt ② has left-hand thread.**

**TOOL 09900-18710: Hexagon socket (12 mm)**

**Speed sensor rotor bolt: 100 N·m (10.0 kg-m, 72.5 lb-ft)**
**Driveshaft bolt: 60 N·m (6.0 kg-m, 43.5 lb-ft)**

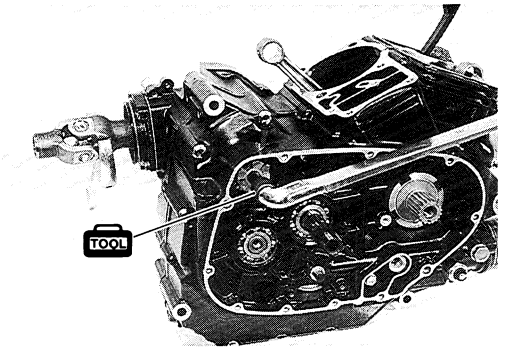


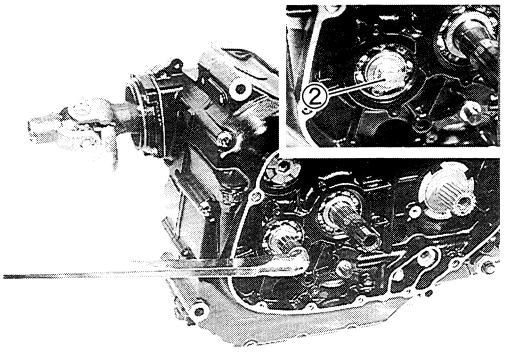

- Install the thrust washer ① onto the crankshaft.

*NOTE:*
*The chamfer Ⓐ of thrust washer ① faces crankcase.*

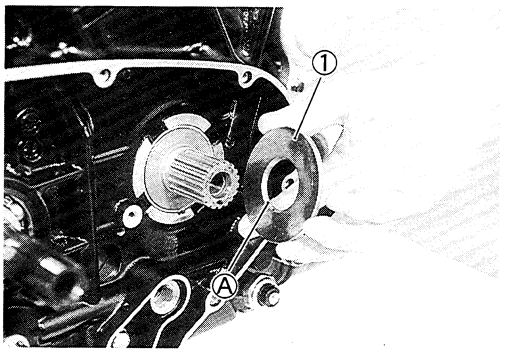


- After aligning the punch mark Ⓑ of the crankshaft with punch mark Ⓒ of the cam chain drive sprocket, install the cam chain drive sprocket.

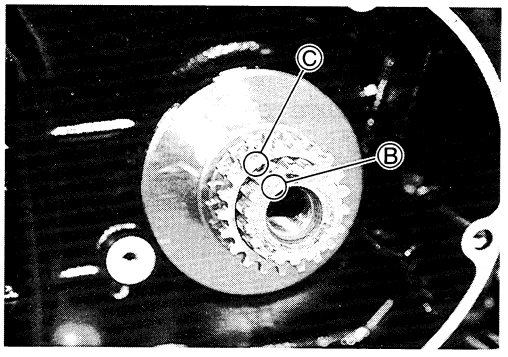


- Install the cam chain tensioner ② and cam chain ③.
- Apply a small quantity of THREAD LOCK "1342" to the cam chain tensioner bolt ④ and tighten it to the specified torque.

**99000-32050: THREAD LOCK "1342"**

**Cam chain tensioner bolt: 10 N·m (1.0 kg-m, 7.0 lb-ft)**

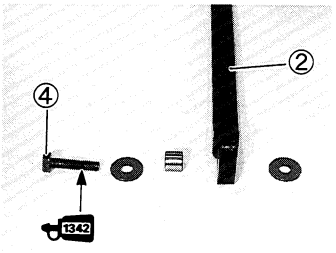


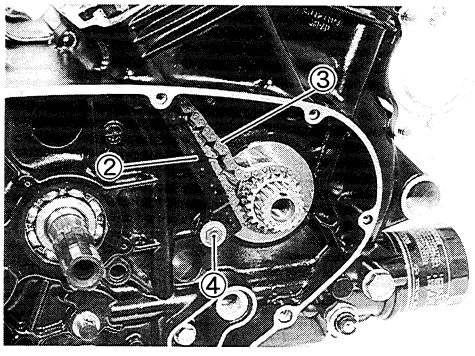


- Install the primary drive gear and it bolt.

*NOTE:*
*This bolt has left-hand thread.*

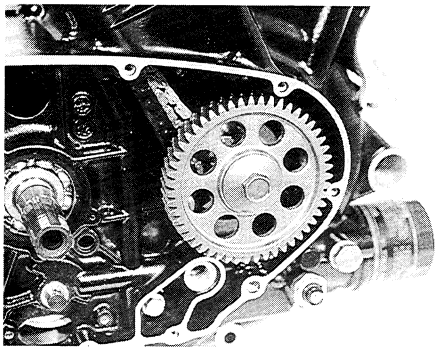

- Hold the primary drive gear by using the special tool and tighten its bolt to the specified torque.

**09930-40113: Rotor holder**

**Primary drive gear bolt: 150 N·m (15.0 kg-m, 108.5 lb-ft)**

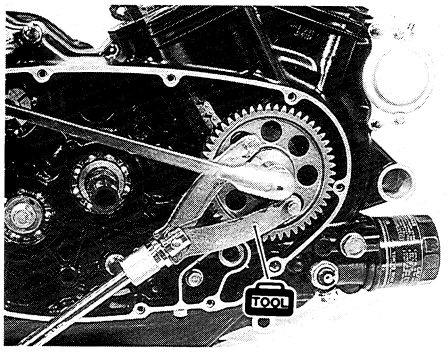

- Install the oil pressure regulator ① and the copper washer.

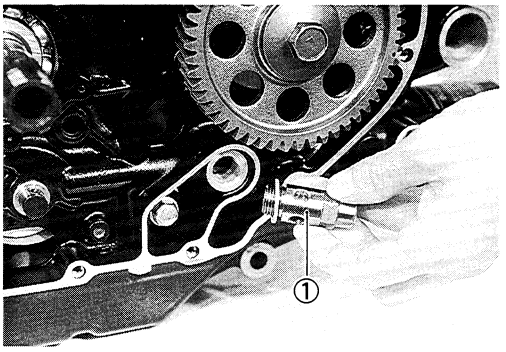


- Tighten the oil pressure regulator ① to the specified torque.

**Oil pressure regulator: 28 N·m (2.8 kg-m, 20.0 lb-ft)**

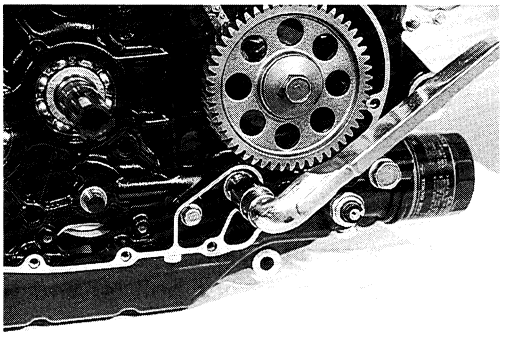

- Install the washer ②, the pin ③, the oil pump driven gear ④ and the circlip ⑤ to the oil pump shaft.

**TOOL 09900-06107: Snap ring pliers**

*NOTE:*
*The boss Ⓐ of the oil pump driven gear ④ faces crankcase side.*

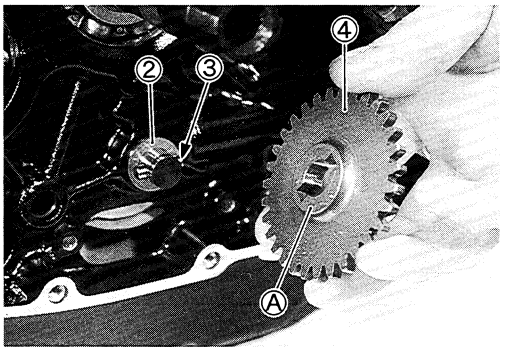


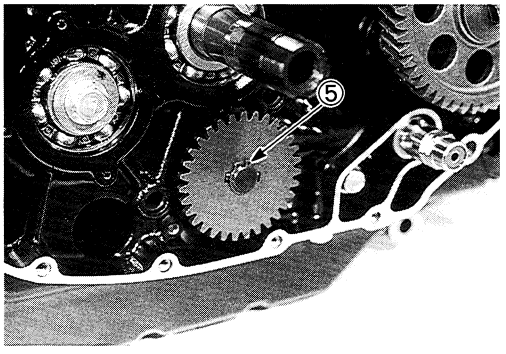


- Install the spacer ⑥ the thrust washer ⑦ onto the countershaft.

*NOTE:*
*The chamfer side Ⓑ of thrust washer ⑦ faces crankcase side.*

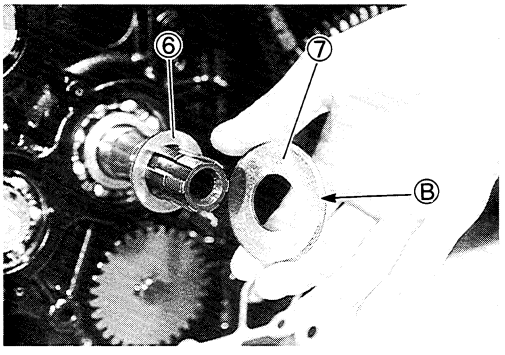

- Install the needle bearing ① and the spacer ② onto the countershaft and apply engine oil to them.

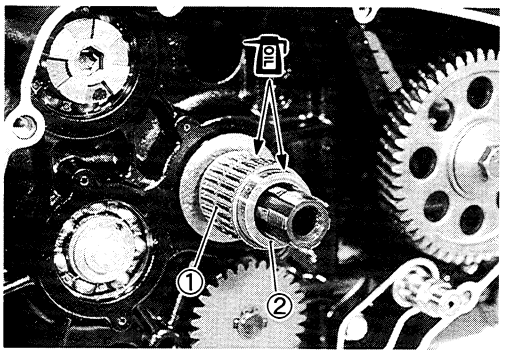


- Install the oil pump drive gear and the pin ③ on the primary driven gear assembly.

*NOTE:*
*When installing the oil pump drive gear, align the pin ③ with the slot Ⓐ and face the convex side Ⓑ of the oil pump drive gear to the primary drive gear.*

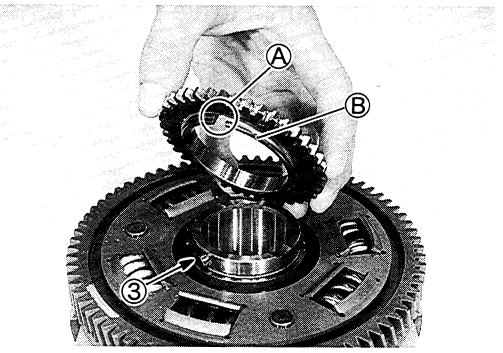


- Install the primary driven gear assembly ④ onto the countershaft.

*NOTE:*
*Be sure to engage the oil pump drive and driven gears, primary drive and driven gears.*

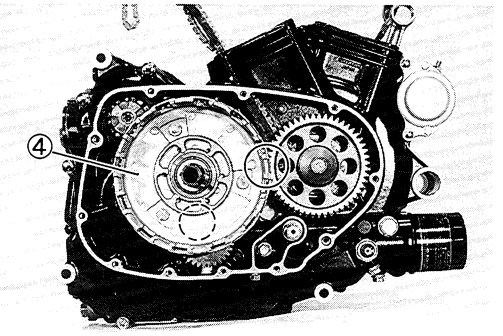


- Install the thrust washer ⑤.

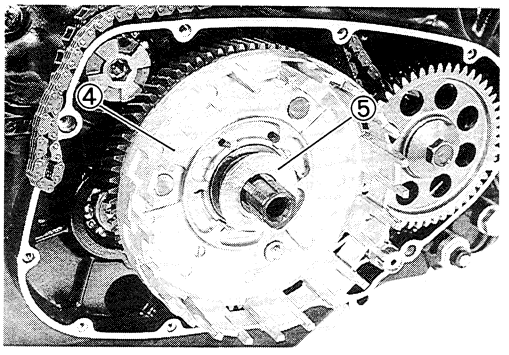


- Install the clutch driven cam ⑥ onto the clutch sleeve hub ⑦.

*NOTE:*
*Align the punched mark Ⓒ on the clutch driven cam with the punched mark Ⓓ on the clutch sleeve hub.*

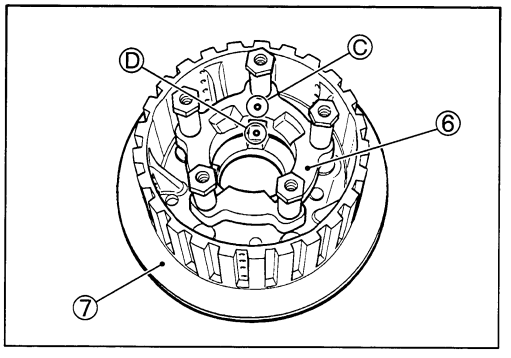

*NOTE:*
*When replacing the clutch spring support bolts, apply THREAD LOCK SUPER "1303" and tighten them to the specified torque.*

**1303 99000-32030: THREAD LOCK SUPER "1303"**

**Clutch spring support bolt: 11 N·m (1.1 kg-m, 8.0 lb-ft)**

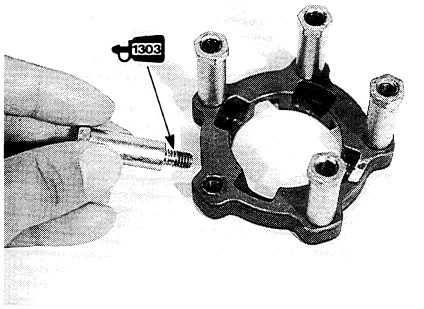


- Install the clutch drive cam ① onto the clutch sleeve hub ②.

*NOTE:*
** Align the paint mark Ⓐ on the clutch drive cam with paint mark Ⓐ on the clutch driven cam ③.*
** When installing the new clutch drive and driven cams, align the ponched marks.*

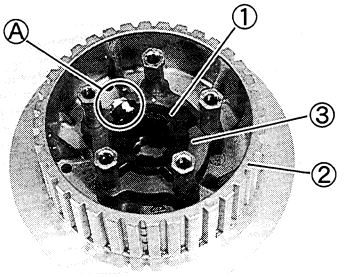


- Install the clutch sleeve hub ② with the clutch drive ① and driven ③ cams onto the countershaft.

*NOTE:*
*The clutch drive cam ① and the clutch driven cam ③ should be replaced as a set.*

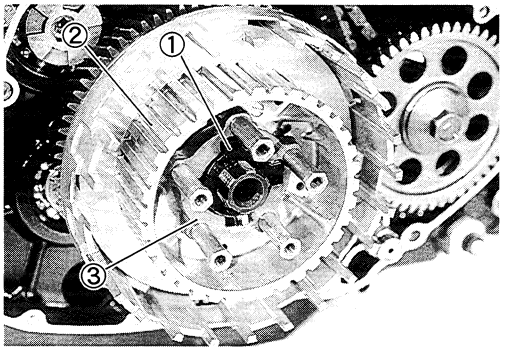


- Install the washer ④ onto the countershaft.

*NOTE:*
*The convex side of the washer faces outside.*

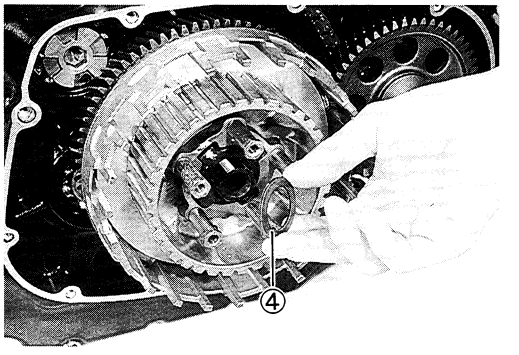


- Tighten the clutch sleeve hub nut to the specified torque by using the special tool.

**TOOL 09920-53740: Clutch sleeve hub holder**

**Clutch sleeve hub nut: 95 N·m (9.5 kg-m, 68.5 lb-ft)**

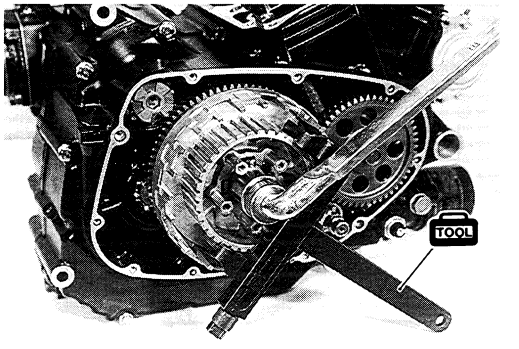

- Lock the clutch sleeve hub nut with a center punch.

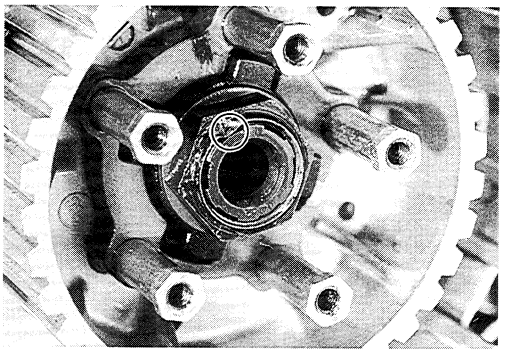

- Insert the clutch drive plates and driven plates one by one into the clutch sleeve hub in the prescribed order, drive plate Ⓐ first.

*NOTE:*
*Insert the outermost No.1 drive plate to the other slits of clutch housing as shown.*

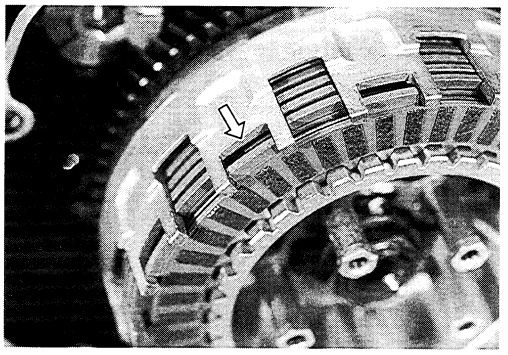

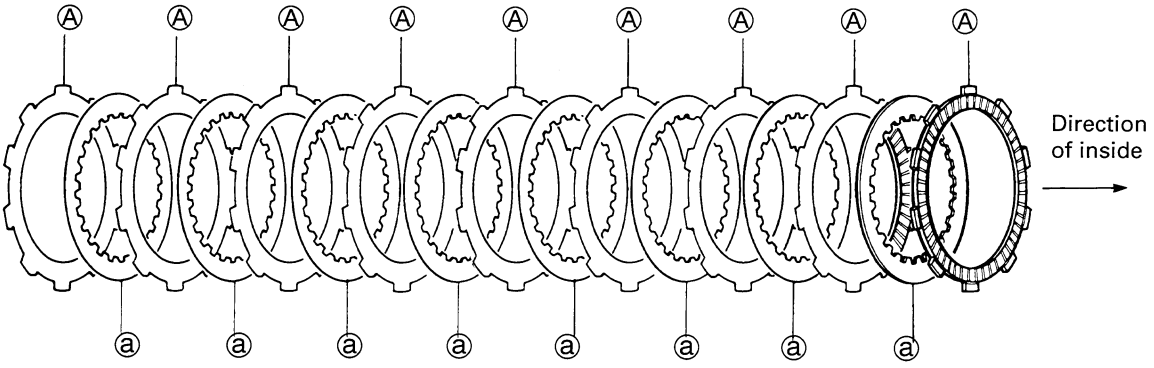


DRIVE PLATE:
Ⓐ Drive Plate (Inside Diameter): 120 mm (4.72 in) ... 9 pcs

DRIVEN PLATE:
ⓐ Driven Plate (Thickness): 1.6 mm (0.06 in) ... 8 pcs

- Install the clutch push rod ① into the countershaft.

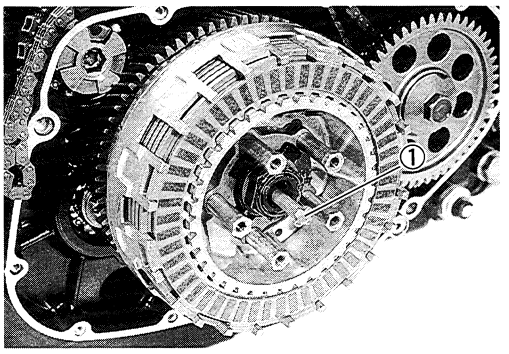


- Install the clutch push piece ②, the bearing ③ and the thrust washer ④ to the countershaft.

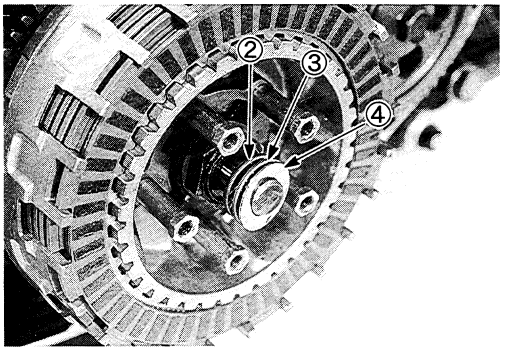


- Install the clutch pressure plate securely.
- Hold the generator with a offset wrench, and then tighten the clutch spring set bolts diagonally to the specified torque.

**Clutch spring set bolt: 10 N·m (1.0 kg-m, 7.0 lb-ft)**

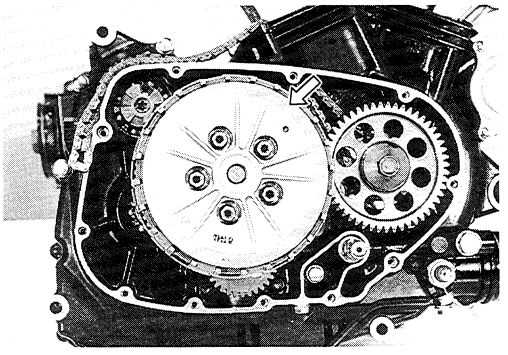

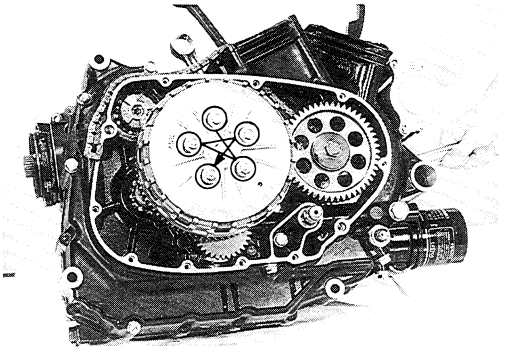

- Install the gasket and dowel pins.

**CAUTION**

**Use the new gasket to prevent oil leakage.**

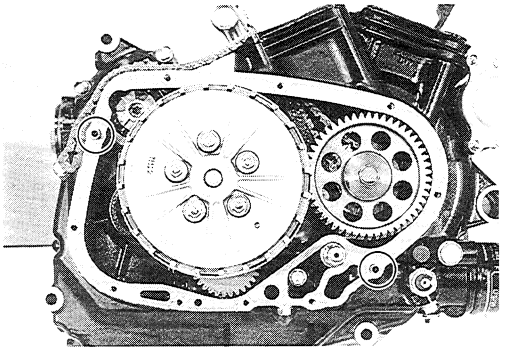

- Install the O-ring to the speed sensor.

*NOTE:*
*Apply grease to the O-ring when installing the speed sensor.*

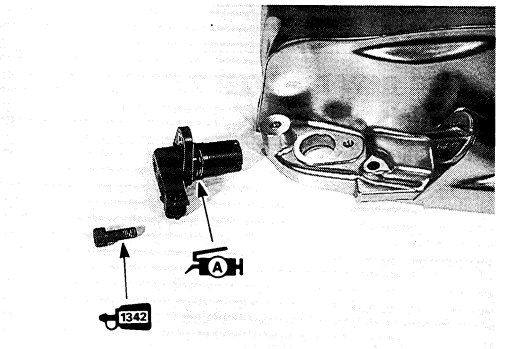

**⚠ CAUTION**

**Use the new O-ring to prevent oil leakage.**

**99000-25010: SUZUKI SUPER GREASE "A"**

- Apply a small quantity of THREAD LOCK "1342" to the bolt.

**99000-32050: THREAD LOCK "1342"**

- Tighten the clutch cover bolts securely.

*NOTE:*
*Fit the gasket washers to the bolts Ⓐ and the clamp to the bolt Ⓑ as shown.*

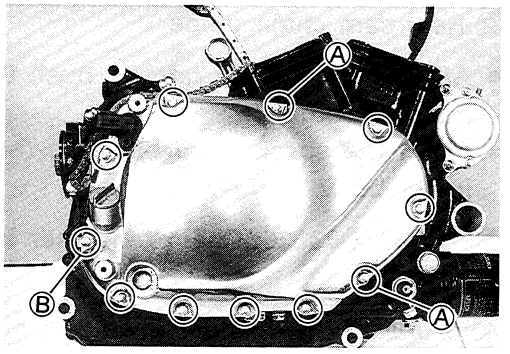


**⚠ CAUTION**

**Use the new gasket washer to prevent oil leakage.**

- Apply a light coat of SUZUKI MOLY PASTE to piston pins surfaces.

**99000-25140: SUZUKI MOLY PASTE**

*NOTE:*
*Install the pistons with the indent Ⓒ facing towards the exhaust side.*

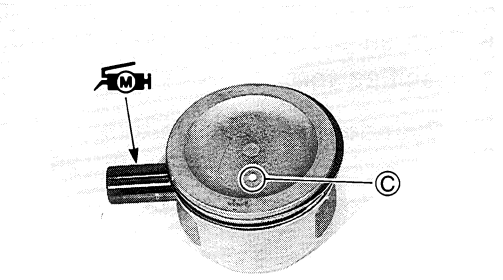


- Install the pistons and piston pins in their original cylinders. Refer to the scribe marks on each piston.
- Place a cloth beneath the piston, and install the circlips ①.

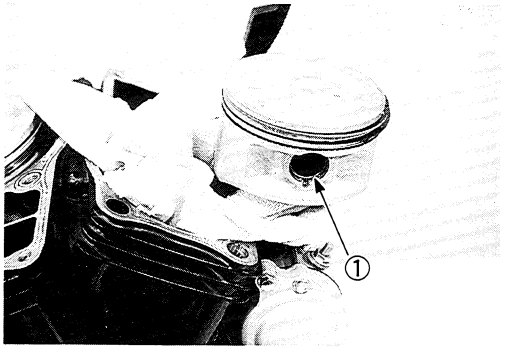


**⚠ CAUTION**

**When turning the crankshaft, pull the cam chains upward, or the chains will be caught between the crankcase and the cam drive sprocket.**

**⚠ CAUTION**

**Use new piston pin circlips to prevent circlip failure which will occur with a bend one.**

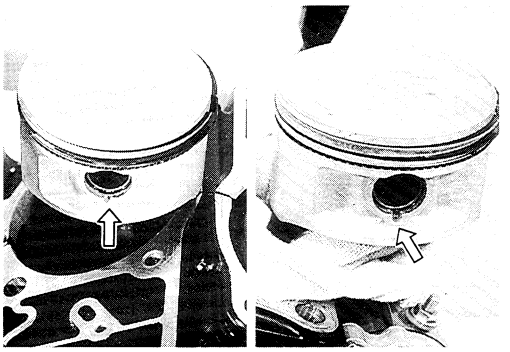

*NOTE:*
*End gap of the circlip is not aligned with the cutaway in the piston pin bore.*

- Assemble the cylinder and cylinder head in the following procedure.
- Install the cam chain guide, the gasket and the dowel pins.

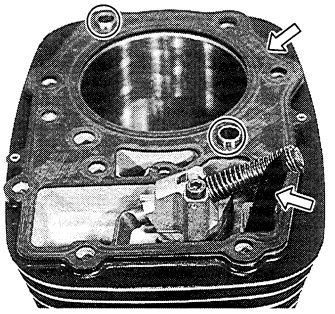

*NOTE:*
*Refer to the section 3B for cam chain tension adjuster installation.*

**⚠ CAUTION**

**Use the new gasket to prevent gas leakage.**

① Front cam chain guide
② Rear cam chain guide

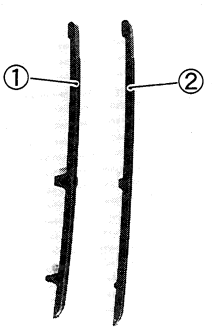


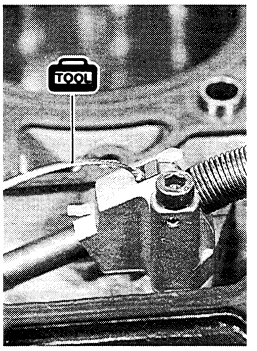


- After unlocking the ratchet, push the cam chain tension adjuster rod.
- Insert the special tool between the ratchet and the adjuster body.

**TOOL 09918-53810: Chain tensioner lock tool.**

*NOTE:*
*After install the cylinder head cover, remove the tensioner lock tool.*

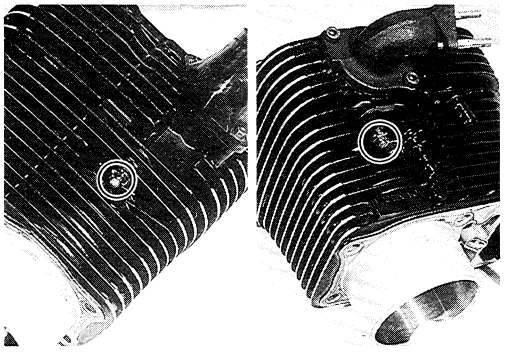

- Tighten the cylinder head bolt (8 mm) and nuts to the specified torque.

**Cylinder head nut (Initial): 10 N·m (1.0 kg-m, 7.0 lb-ft)**
**(Final): 25 N·m (2.5 kg-m, 18.0 lb-ft)**
**Cylinder head 8 mm bolt (Initial): 10 N·m (1.0 kg-m, 7.0 lb-ft)**
**(Final): 25 N·m (2.5 kg-m, 18.0 lb-ft)**

③ The long cylinder head bolt (8 mm):
For front cylinder head
④ The short cylinder head bolt (8 mm):
For rear cylinder head

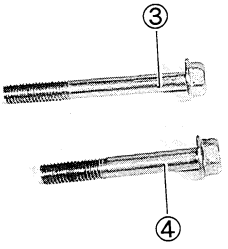


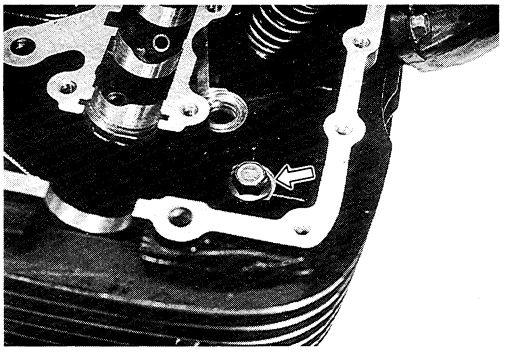

- Apply engine oil to the new O-rings.

**⚠ CAUTION**

**Use the new O-rings to prevent oil leakage.**

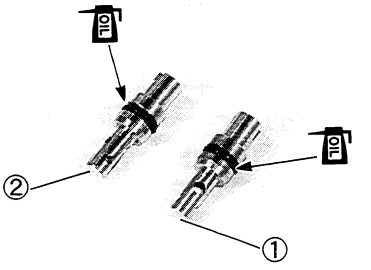


- Install oil jets (① and ②) as shown in the photograph.

① Oil jet (#22)
② Oil jet (#14)

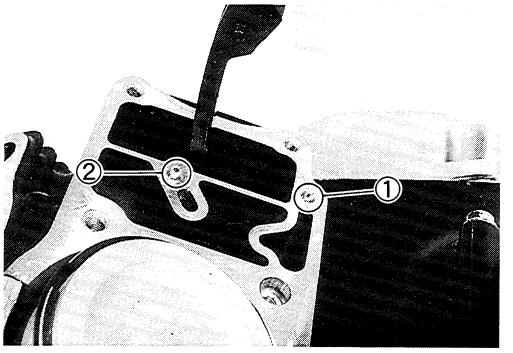


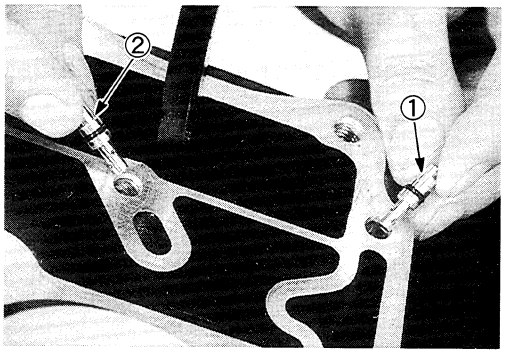


- Coat SUZUKI BOND "1207B" lightly to the mating surfaces among the right and the left crankcases as shown.

**1207B 99000-31140: SUZUKI BOND "1207B"**

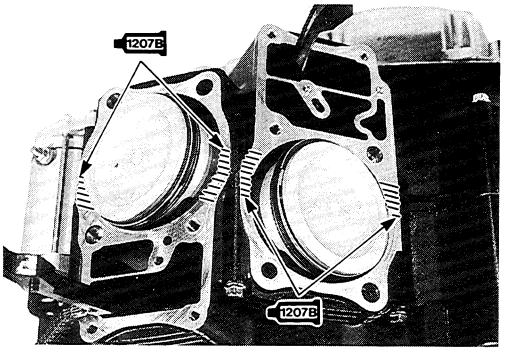


- Fit the dowel pins ③ and new gaskets ④ to the crankcase.

**⚠ CAUTION**

**Use the new gaskets to prevent oil leakage.**

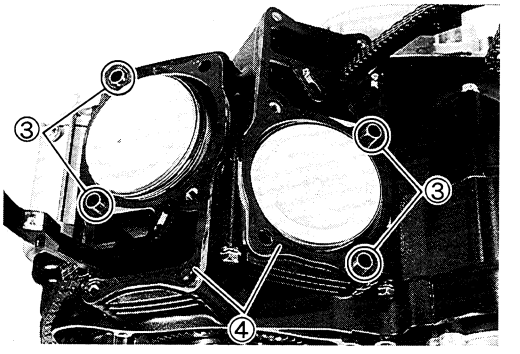


- Position the piston ring gaps as shown. Before inserting each piston into the cylinder, check that the gaps are located.

*NOTE:*
*Refer to the section 3B for the piston ring installation.*

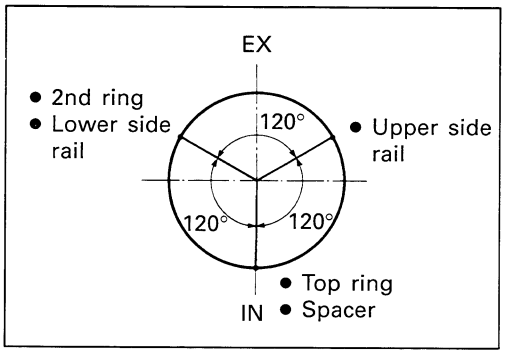

- Hold the piston rings in proper position, and install the cylinders and cylinder heads on the crankcase.

*NOTE:*
*When installing the cylinders, keep the cam chains taut. The cam chain must not be caught between cam drive sprocket and crankcase when crankshaft is rotated.*

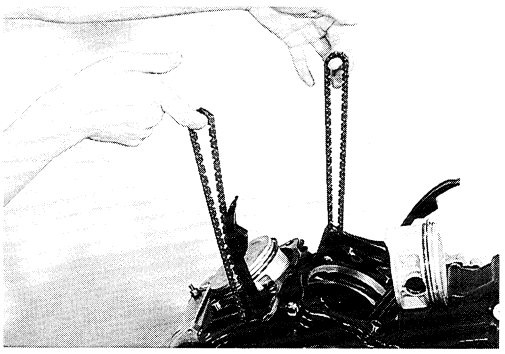

- Tighten the cylinder head bolts to the specified torque.

**Cylinder head 10 mm bolt (Initial): 25 N·m (2.5 kg-m, 18.0 lb-ft)**
**(Final): 37 N·m (3.7 kg-m, 27.0 lb-ft)**

*NOTE:*
*Install the washers to the cylinder head bolts (10 mm) as shown.*

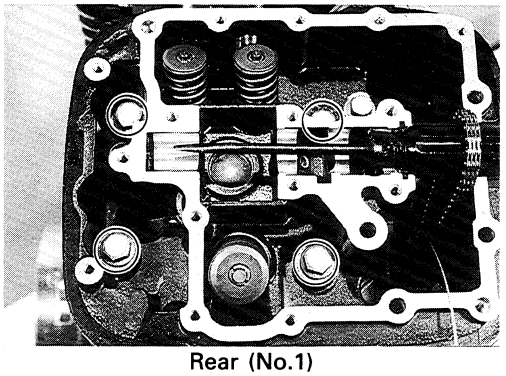

Rear (No.1)

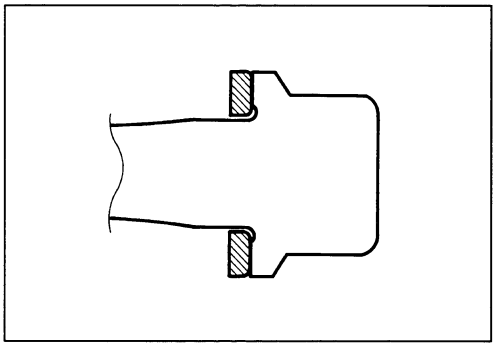

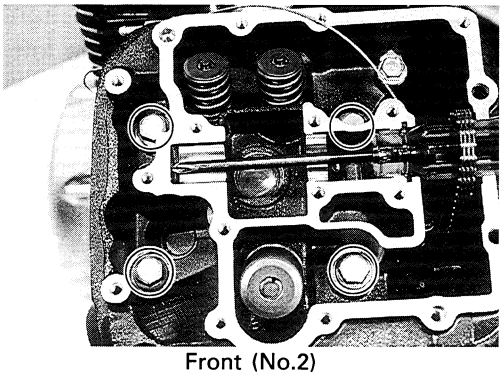

Front (No.2)

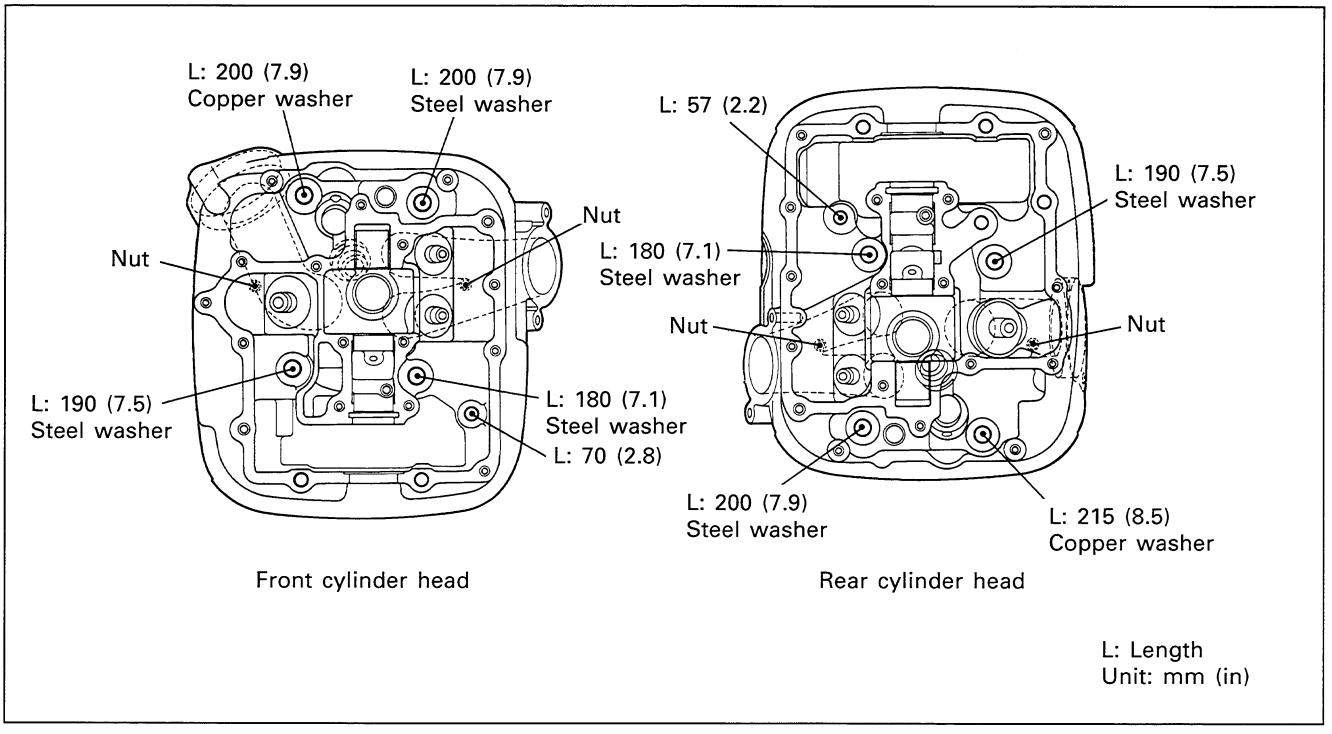

- Turn the crankshaft counterclockwise with a offset wrench and align "R | T" line Ⓐ on the generator rotor with the aligning mark Ⓑ of the crankcase while keeping the camshaft drive chain pulled upward.

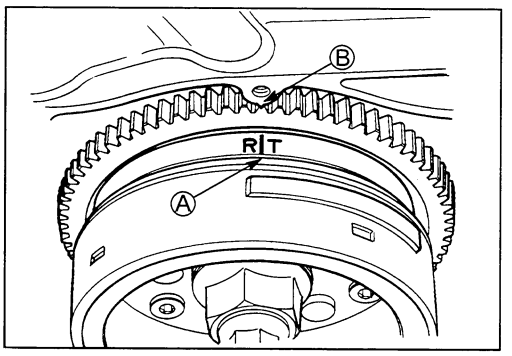


**⚠ CAUTION**

**Pull the cam chains upward, or the chain will be caught between crankcase and cam drive sprocket.**

*NOTE:*

* *Before installing the camshafts onto each cylinder head, apply SUZUKI MOLY PASTE onto the camshaft journals and do not leave any dry spots. Also, apply engine oil onto the camshaft journal holders.*

**99000-25140: SUZUKI MOLY PASTE**

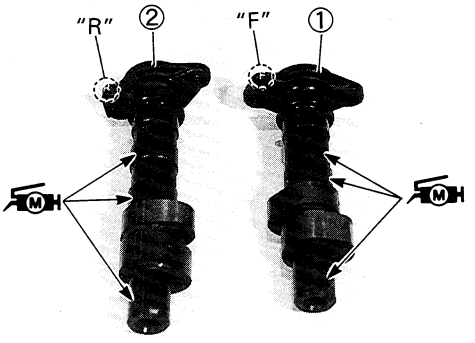


* The camshaft is identified by the embossed letters "F" and "R".

① Front cam shaft
② Rear cam shaft

- When the "R/T" line Ⓐ on the generator rotor is aligned with the aligning mark Ⓑ of the crankcase, install the camshafts and cam sprockets and engage the cam chains on each cam sprocket.

*NOTE:*

* *Each camshaft sprocket has an arrow marked Ⓒ. Turn each camshaft so that arrow mark is aligned with the gasket surface of each cylinder head.*

* Both of the arrow marks on the camshafts face front Ⓓ.
* Refer to the page 3-56 for the camshaft positions.

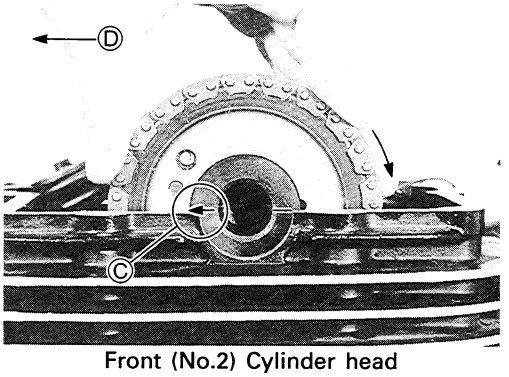


Front (No.2) Cylinder head

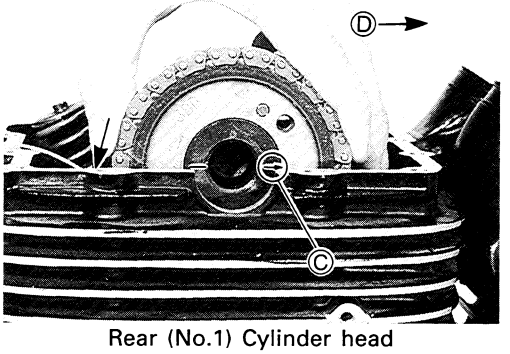


Rear (No.1) Cylinder head

- Fit lock washers so that these are covering the locating pins.
- Apply THREAD LOCK SUPER "1303" to the bolts and tighten the cam sprocket bolts to the specification.

**1303 99000-32030: THREAD LOCK SUPER "1303"**

**Cam sprocket bolt: 15 N·m (1.5 kg-m, 11.0 lb-ft)**

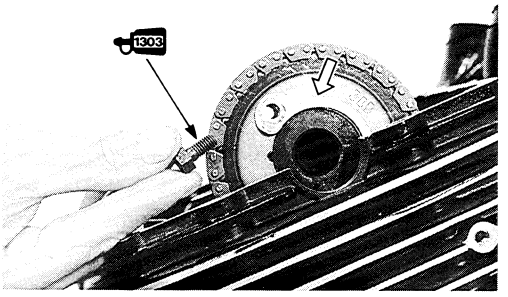


- Bend up the washer tongue positively to lock the bolts.

*NOTE:*
*Do not remove the tensioner lock tool at this stage.*

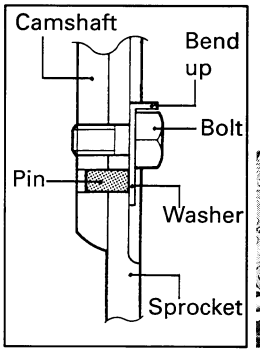


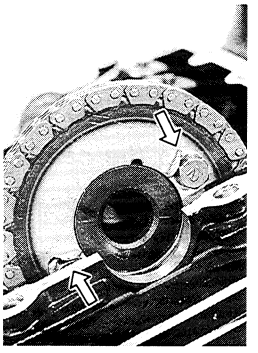

- Pour motor oil into the cylinder head.

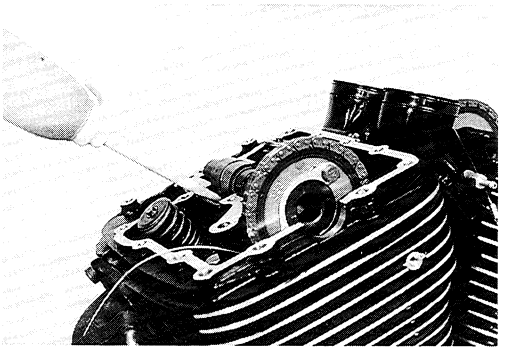

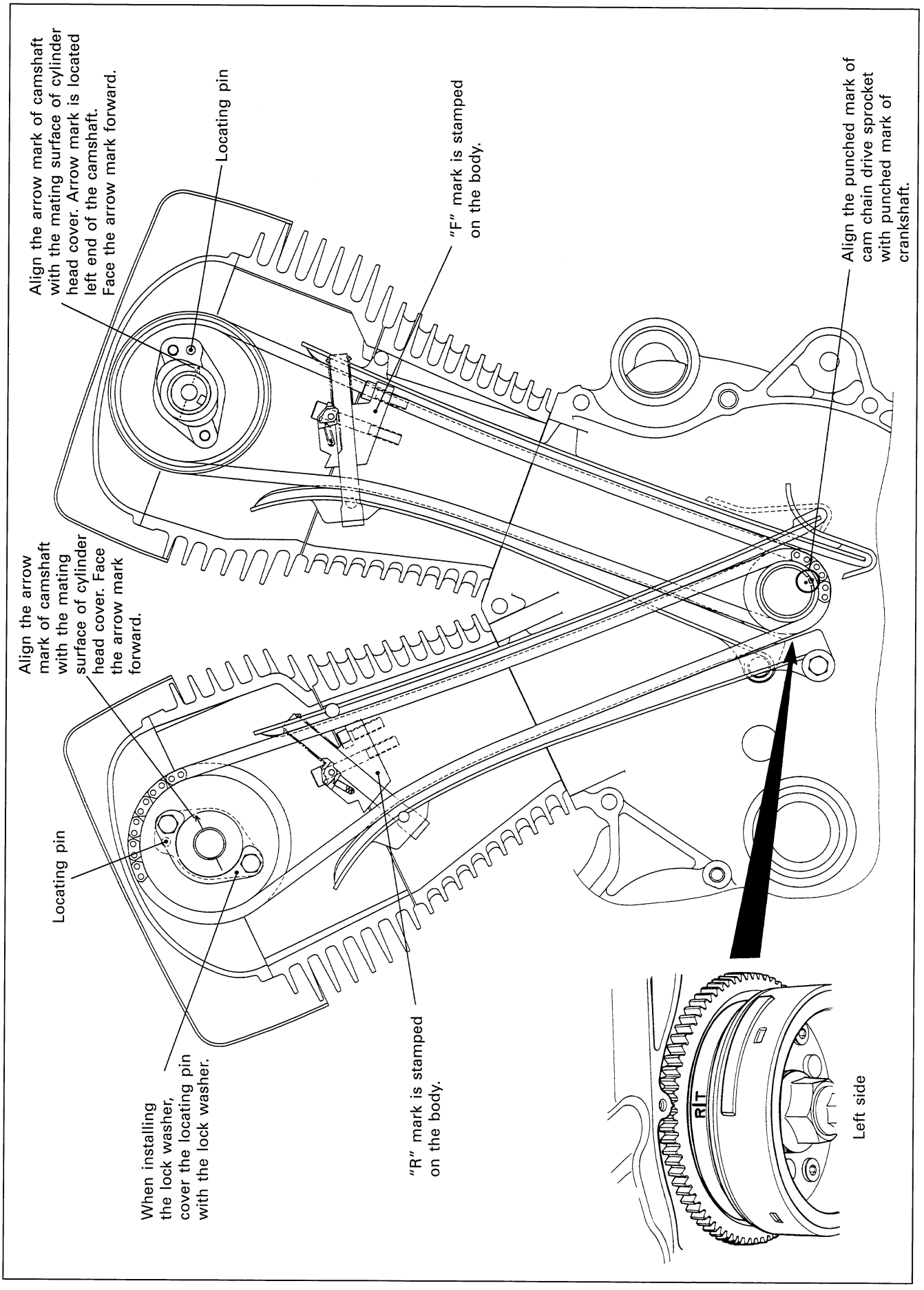
Align the arrow mark of camshaft with the mating surface of cylinder head cover. Arrow mark is located left end of the camshaft. Face the arrow mark forward.
Locating pin
"F" mark is stamped on the body.
Align the punched mark of cam chain drive sprocket with punched mark of crankshaft.
Align the arrow mark of camshaft with the mating surface of cylinder head cover. Face the arrow mark forward.
Locating pin
When installing the lock washer, cover the locating pin with the lock washer.
"R" mark is stamped on the body.
R
T
Left side

- Remove the plug from the rear cylinder head cover.

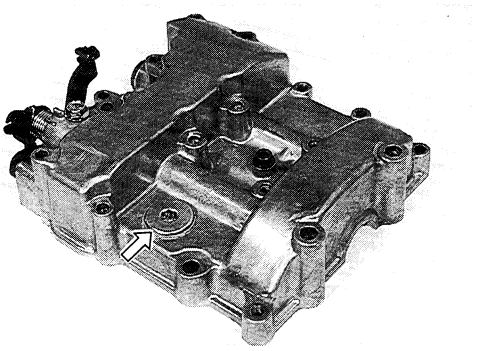

- Clean the mating surfaces of the cylinder head and head cover before matching.
- Install the dowel pins ① to the cylinder head.
- Fit the camshaft end caps to the correct positions.
- Apply SUZUKI BOND "1216" to the mating surface of the cylinder head cover in the following procedure.

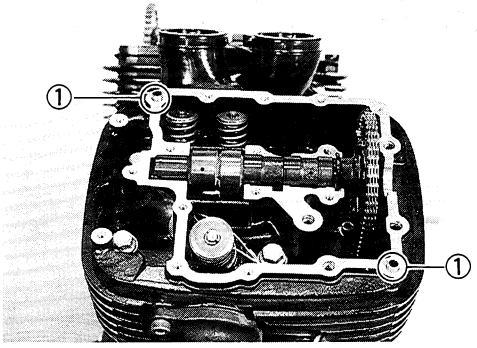


**1216 99000-31160: SUZUKI BOND "1216"**

*NOTE:*
*Use of SUZUKI BOND"1216" is as follows.*
* *Make surfaces free from moisture, oil, dust and other foreign materials.*
* *Spread on surfaces thinly to form an even layer, and assemble the heads within few minutes.*
* *Take extreme care not to apply and BOND "1216" to the journals and oil passage area.*
* *Apply to cornered surface as it forms a comparatively thick film.*

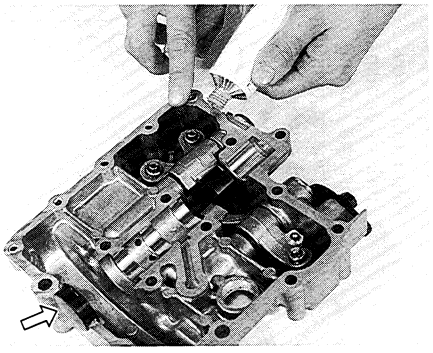

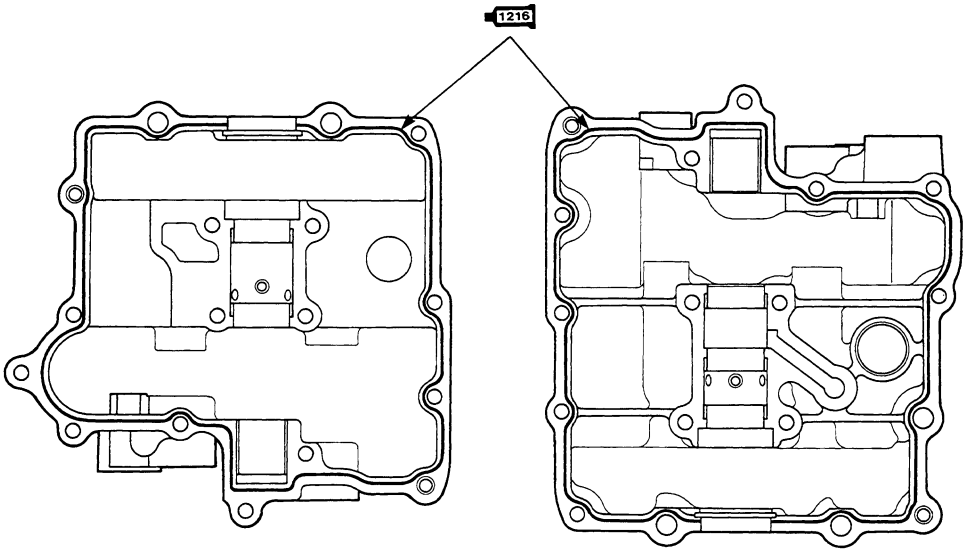


Front cylinder head cover

Rear cylinder head cover

- Install the cylinder head covers.

*NOTE:*
** Before installing the cylinder head covers, bleed the air from the lash adjusters. (See p. 3A-3.)*
** Pass the tensioner lock tool through the hole of the rear cylinder head cover and through the breather hole of the front cylinder head cover.*

- Temporarily tighten the front cylinder head covers.
- Tighten the rear cylinder head cover bolts diagonally to the specified torque.

**Cylinder head cover bolt (6 mm): 10 N·m (1.0 kg-m, 7.0 lb-ft)**
**(8 mm): 25 N·m (2.5 kg-m, 18.0 lb-ft)**

*NOTE:*
*Fit the gasket washer to the bolts Ⓐ as shown.*

**▲ CAUTION**

**Use the new gasket washer to prevent oil leakage.**

- Remove the tensioner lock tools.

*NOTE:*
*Click sound is heard when the cam drive chain tensioner is released.*

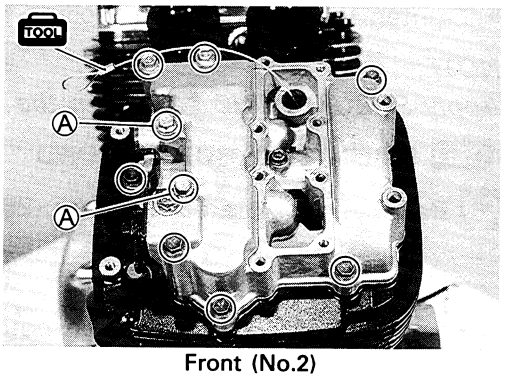

Front (No.2)

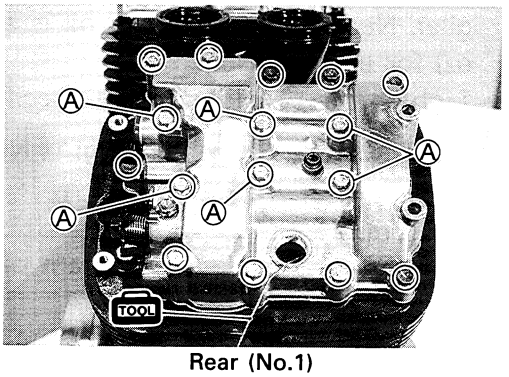

Rear (No.1)

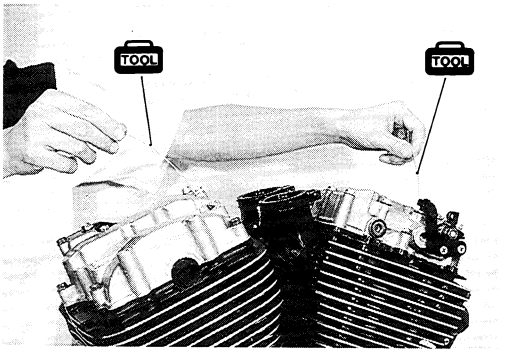


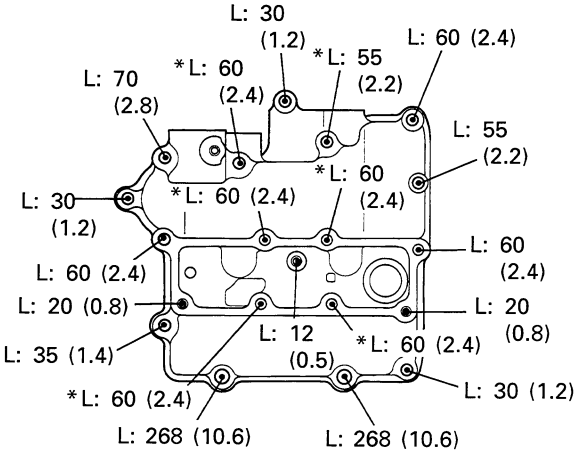


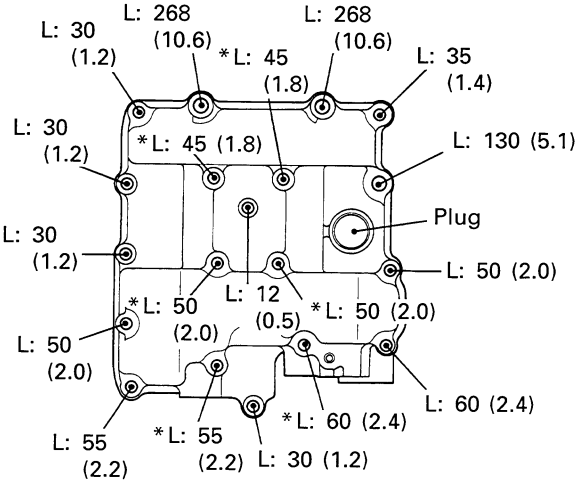


L: Length
Unit: mm (in)
*: Gasket washer position

- Tighten the plug to the specified torque.

*NOTE:*
*Apply SUZUKI BOND "1216" to the thread of the plug.*

**1216 99000-31160: SUZUKI BOND "1216"**

**Rear cylinder head cover plug: 25 N·m (2.5 kg-m, 18.0 lb-ft)**

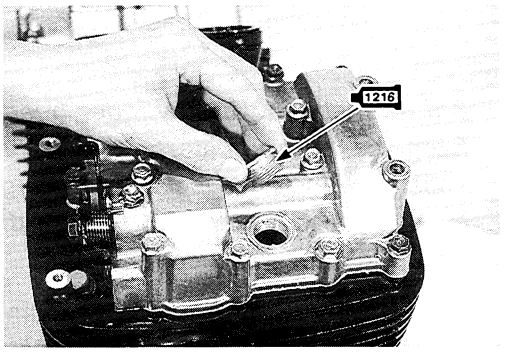


- Remove the oil plug and then pour the engine oil to fill the rocker arm oil passage through the hole Ⓐ with a oiler. Necessary amount of oil is approx. 50 ml (1.7 US oz) for each cylinder.
- Tighten the oil plugs to the specified torque.

**Cylinder head cover oil plug: 10 N·m (1.0 kg-m, 7.0 lb-ft)**

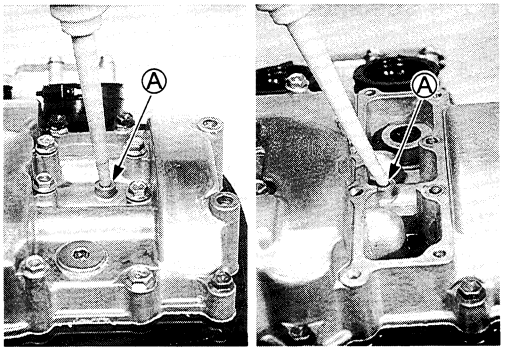


**⚠ CAUTION**

**Use the new gasket to prevent oil leakage.**

- Install the breather cover and the gasket.
- Tighten the front cylinder head cover bolts diagonally to the specified torque.

**Cylinder head cover bolt (6 mm): 10 N·m (1.0 kg-m, 7.0 lb-ft)**
**(8 mm): 25 N·m (2.5 kg-m, 18.0 lb-ft)**

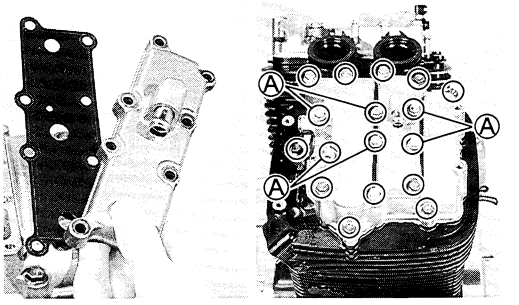


*NOTE:*
*Fit the gasket washer to the bolt Ⓐ.*

**⚠ CAUTION**

**Use the new gasket washer to prevent oil leakage.**

- Install the cylinder head side caps.

① Front cylinder head side cap
② Rear cylinder head side cap

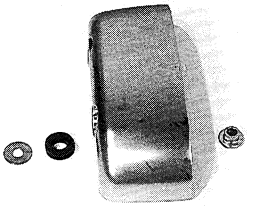

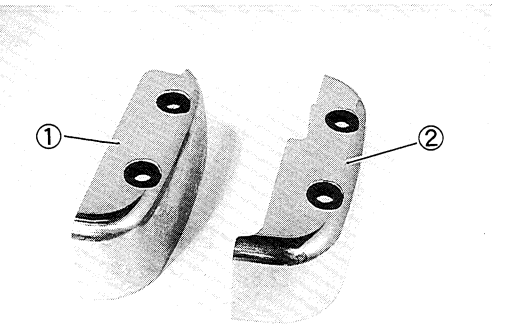


- Tighten the cylinder head side cap bolts to the specified torque.

**Cylinder head cover bolt (8 mm): 25 N·m (2.5 kg-m, 18.0 lb-ft)**

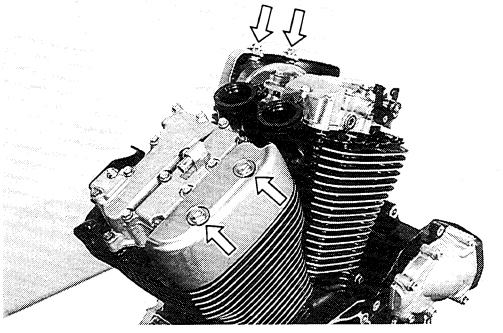

- Install the starter idle gear ①, its shaft ② and the washer ③.

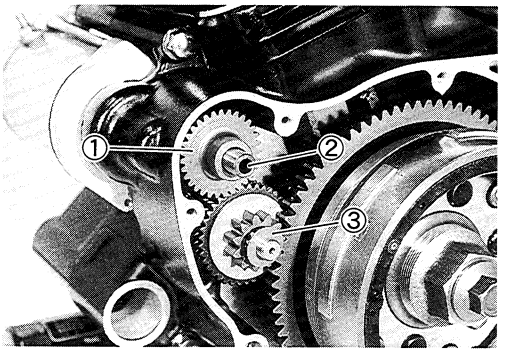


- Install the bush ④ to the generator cover.

*NOTE:*
*Apply engine oil and SUZUKI MOLY PASTE to the inside of the bush ④.*

**99000-25140: SUZUKI MOLY PASTE**

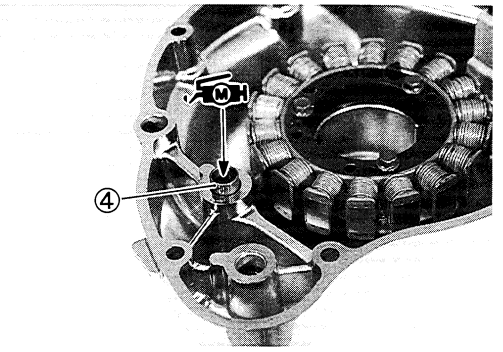


- Install the dowel pins and gasket.

**⚠ CAUTION**

**Use the new gasket to prevent oil leakage.**

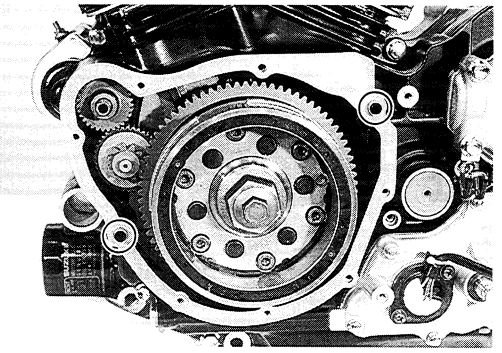

- Tighten the generator cover securely.

*NOTE:*
*Fit the clamp to the bolt Ⓐ as shown.*

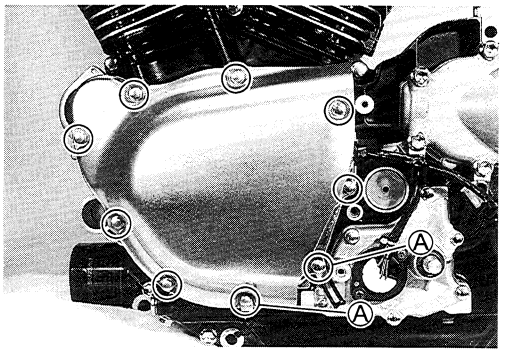


- Install the spark plugs. (See p. 2-4.)

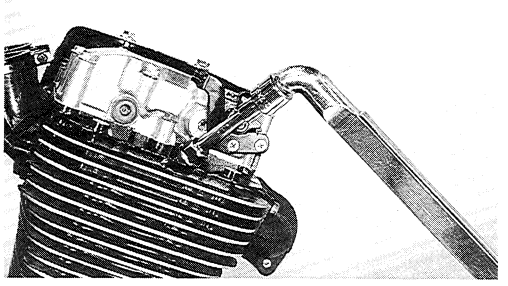

# CAMSHAFT/CYLINDER HEAD/CYLINDER HEAD COVER

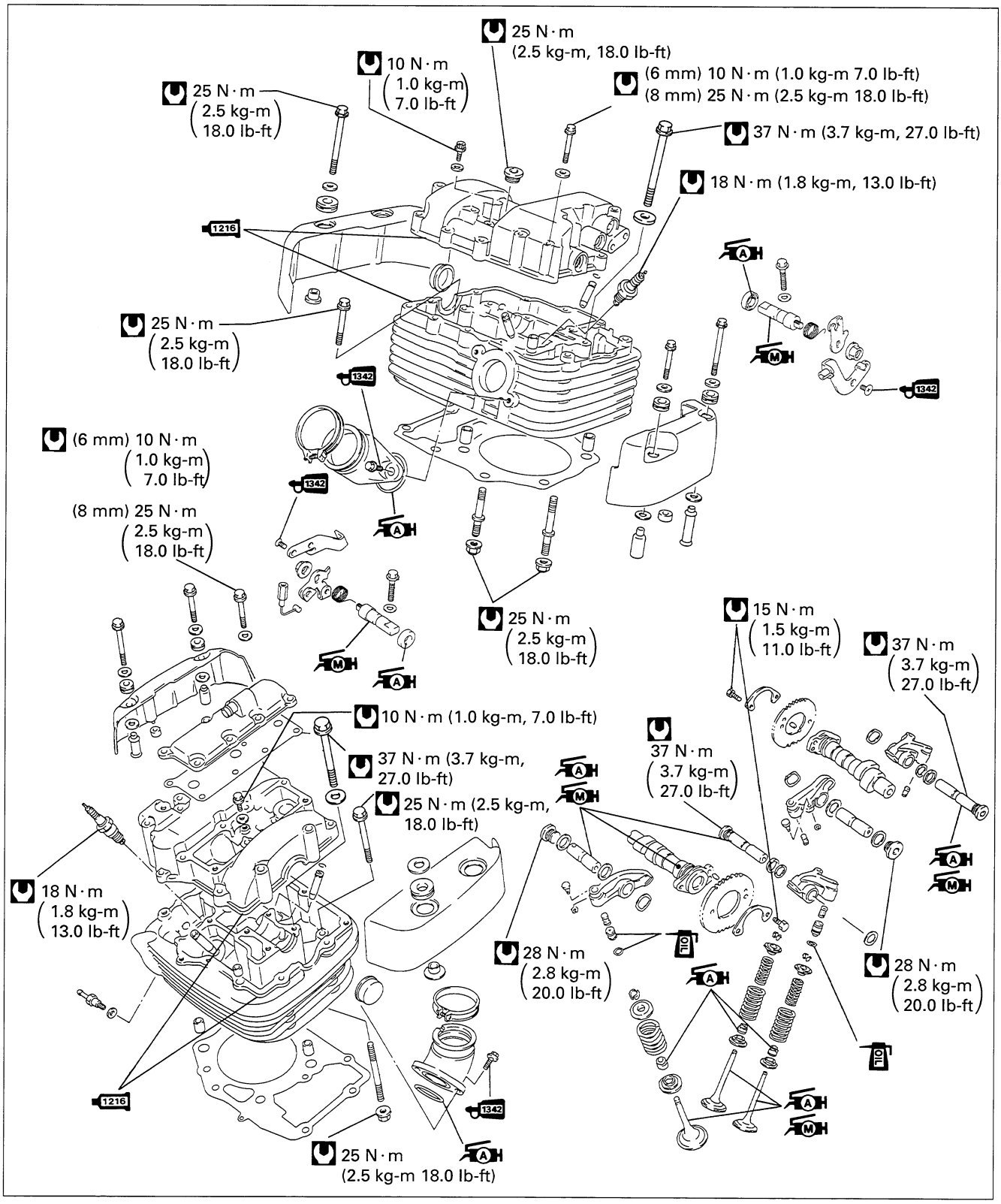


## CONTENTS


*CAMSHAFT/CYLINDER HEAD/CYLINDER HEAD COVER REMOVAL ..... 3A- 1*

*CAMSHAFT/CYLINDER HEAD/CYLINDER HEAD COVER SERVICING ..... 3A- 1*

*CAMSHAFT/CYLINDER HEAD/CYLINDER HEAD COVER INSTALLATION ..... 3A-15*

## CAMSHAFT/CYLINDER HEAD/CYLINDER HEAD COVER REMOVAL

These engine components require engine removal and disassembly. Refer to the engine removal and the engine disassembly sections.

* **ENGINE REMOVAL ..... See pp. 3-2 to -10.**
* **ENGINE DISASSEMBLY ..... See pp. 3-16 to -30.**

## CAMSHAFT/CYLINDER HEAD/CYLINDER HEAD COVER SERVICING

**⚠ CAUTION**

**Identify the position of each removed part. Organize the parts in their respective groups (i.e., intake, exhaust, front or rear) so that they can be installed in their original locations.**

### CYLINDER HEAD COVER DISASSEMBLY

- Remove the de-compression cable holder.

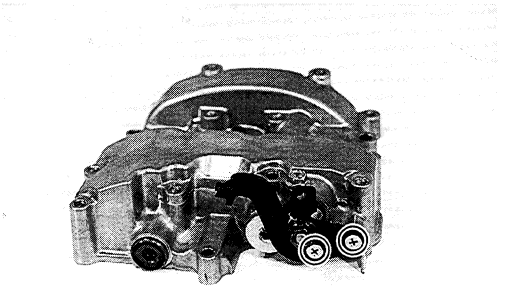

- Remove the exhaust rocker arm shaft plug ①.
- Remove the intake rocker arm shaft ②.

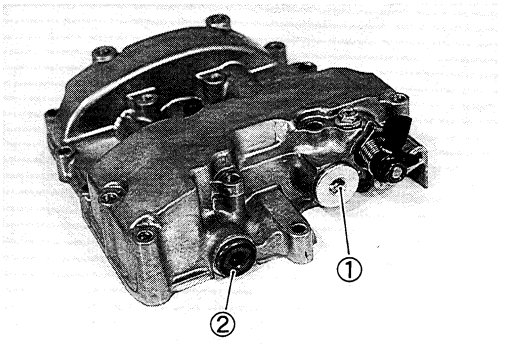


- Remove the exhaust rocker arm shaft ③ by using a 6 mm bolt.

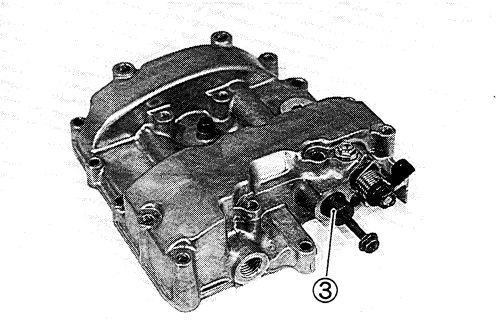

- Remove the following parts.

① Plug
② Intake rocker arm shaft
③ Exhaust rocker arm shaft
④ Gasket
⑤ Thrust washer
⑥ Exhaust rocker arm
⑦ Intake rocker arm
⑧ Wave washer

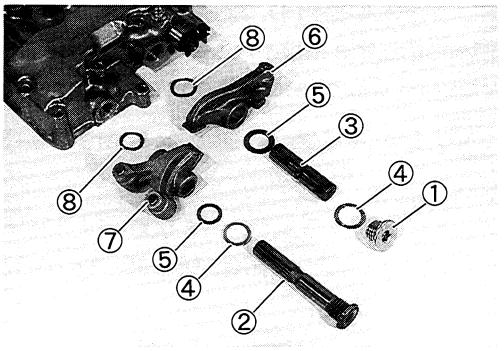


- Remove the de-compression shaft securing bolt and gasket washer.
- Remove the de-compression shaft and spring.

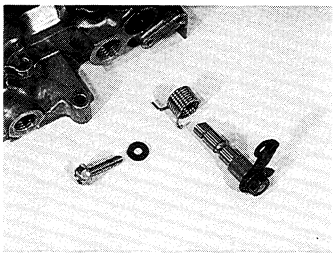

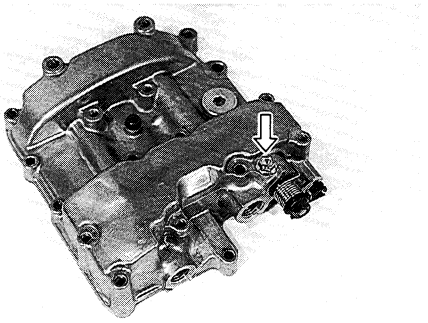

- Remove the oil seal.

*NOTE:*
*If no oil leakage, the oil seal removal is not necessary.*

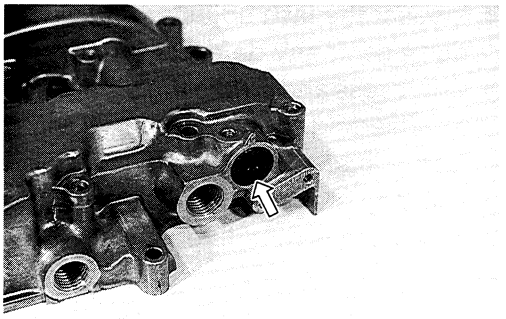

**CYLINDER HEAD COVER DISTORTION**

After removing sealant (SUZUKI BOND "1216") from the mating surface of the cylinder head cover, place the cylinder head cover on a surface plate and check for distortion with a thickness gauge. Check points are shown in Fig.

**Service Limit**
**Cylinder head cover distortion: 0.05 mm (0.002 in)**

If the distortion exceeds the limit, replace the cylinder head set.

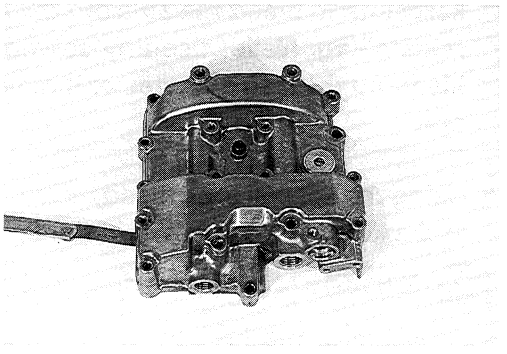

**ROCKER ARM SHAFT O.D.**

Measure the diameter of the rocker arm shafts.

**TOOL 09900-20205: Micrometer (0–25 mm)**

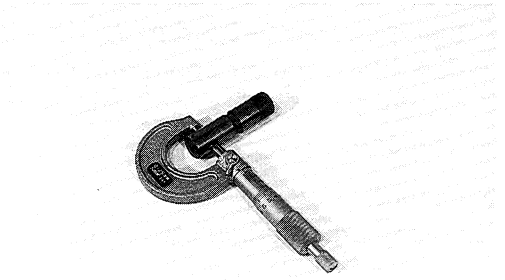

**Standard**

| | | |
|---|---|---|
| **Rocker arm shaft O.D.** | **(IN):** | **13.966–13.984 mm (0.5498–0.5506 in)** |
| | **(EX):** | **15.966–15.984 mm (0.6286–0.6293 in)** |

### ROCKER ARM I.D.

Measure the inside diameter of the rocker arm and check the wear of the camshaft contacting surfaces.

**TOOL 09900-20605: Dial calipers (10–34 mm)**

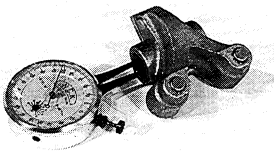

**Standard**

**Rocker arm I.D. (IN): 14.000–14.018 mm (0.5511–0.5519 in)**
**(EX): 16.000–16.018 mm (0.6299–0.6303 in)**

### LASH ADJUSTER

- Remove the lash adjusters ① from the rocker arms.

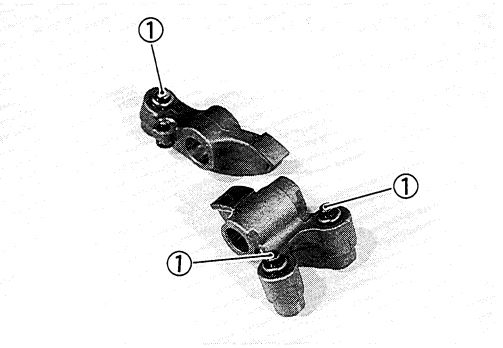


- Inspect the lash adjuster and O-ring for wear, dent and/or damage. If any defect is found, replace it with a new one.
- Compress and stroke the plunger with your finger by using air bleeding tool and remove the oil completely from the lash adjuster body. Wash it with kerosene and inspect the lash adjuster whether it strokes smoothly. If any hitches or stickiness is noted, replace it with a new one.

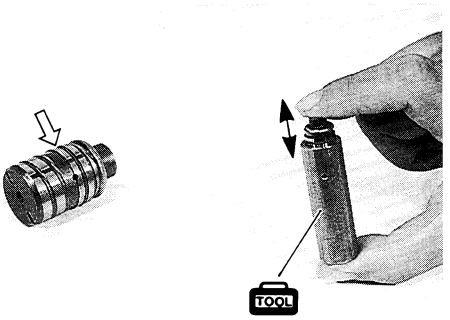


**⚠ CAUTION**

**When removing the cylinder head cover, always use kerosene to bleed the air from the lash adjuster before reinstalling. Never use any solvent, fluid or oil when bleeding the lash adjuster, or it may cause engine damage.**

- Using the special tool, bleed the air from the lash adjusters in the kerosene as shown in the figure.

**TOOL 09913-10740: Air bleeding tool**

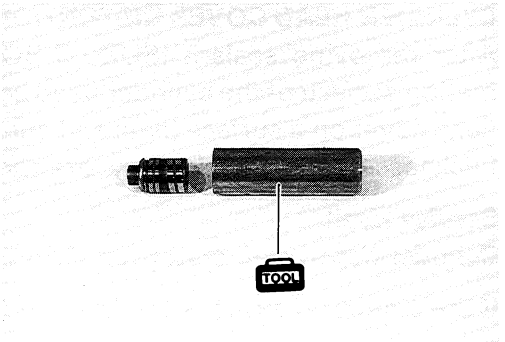


- After filling the lash adjuster with fresh kerosene, compress the plunger and body with your finger and inspect that it strokes 0–0.5 mm Ⓐ. If it strokes more than specified, bleed the air again and check it. If the stroke is not within the specification, replace the lash adjuster with a new one.

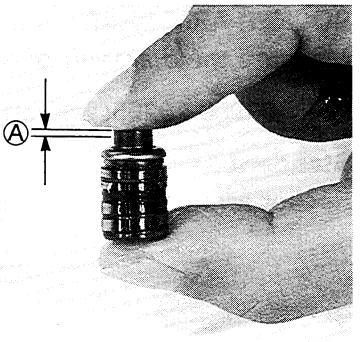


**Standard**

**Lash-adjuster plunger stroke Ⓐ: 0–0.5 mm (0–0.02 in)**

- Install the rash adjusters to the each rocker arm shaft.

*NOTE:*
*Apply oil to the O-ring when installing the rash adjuster.*

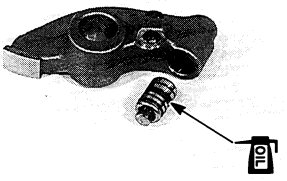


**DE-COMPRESSION SHAFT**

- Inspect the de-compression shaft and the seat on the exhaust rocker arm for wear or damage.

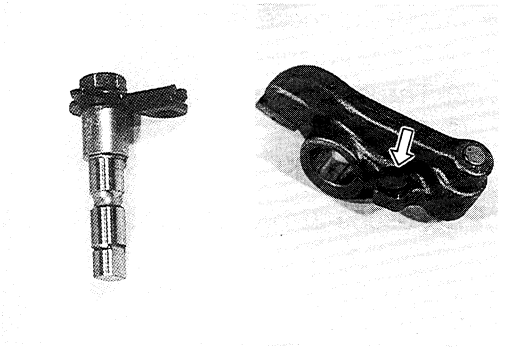

- Inspect the de-compression shaft oil seal for wear or damage.

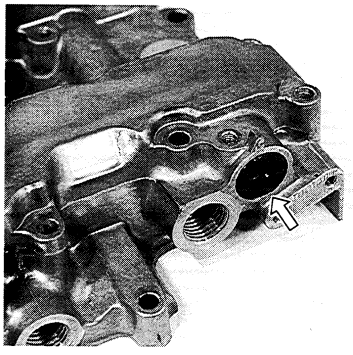

**CYLINDER HEAD COVER REASSEMBLY**

Reassemble the cylinder head cover in the reverse order of disassembly. Pay attention to the following points:

- Install the oil seal and apply grease to its lip.

**99000-25010: SUZUKI SUPER GREASE "A"**

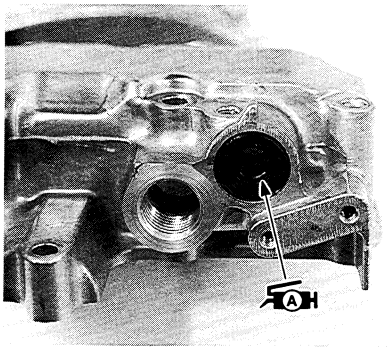

- When installing the de-compression shaft, apply SUZUKI MOLY PASTE.

**99000-25140: SUZUKI MOLY PASTE**

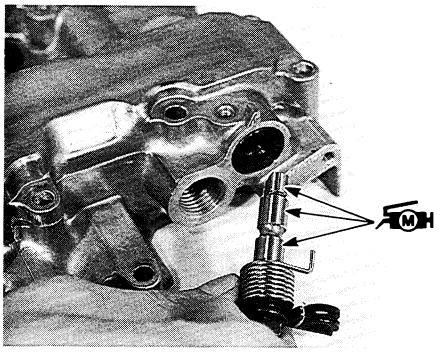

- Install the spring as shown.
- After installing the de-compression shaft, tighten the set bolt.

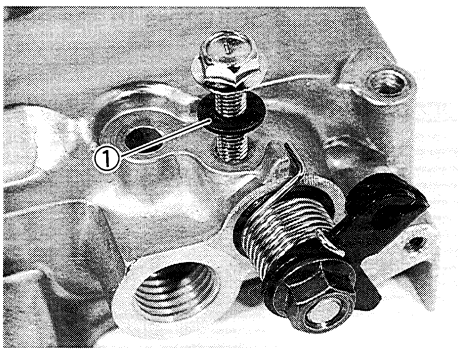


**⚠ CAUTION**

**Use a new gasket washer ① on the set bolt to prevent oil leakage.**

- Install the rocker arms and washers.
  ① Wave washer
  ② Thrust washer
  ③ Gasket
- Apply SUZUKI MOLY PASTE to the rocker arm shaft.

**99000-25140: SUZUKI MOLY PASTE**

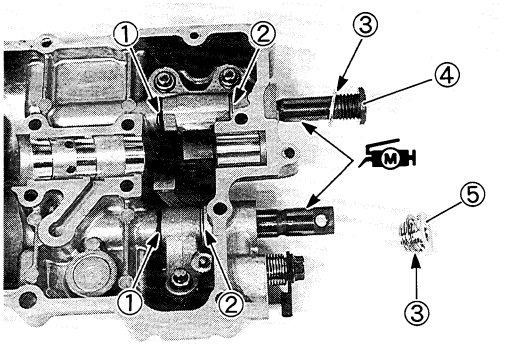


- Tighten the rocker arm shaft ④ and plug ⑤.

**Rocker arm shaft ④: 37 N·m (3.7 kg-m, 27.0 lb-ft)**
**Rocker arm shaft plug ⑤: 28 N·m (2.8 kg-m, 20.0 lb-ft)**

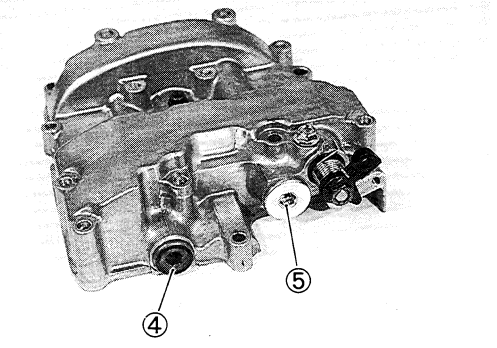


- Install the cable holder after applying the THREAD LOCK "1342" to the securing screw.

**99000-32050: THREAD LOCK "1342"**

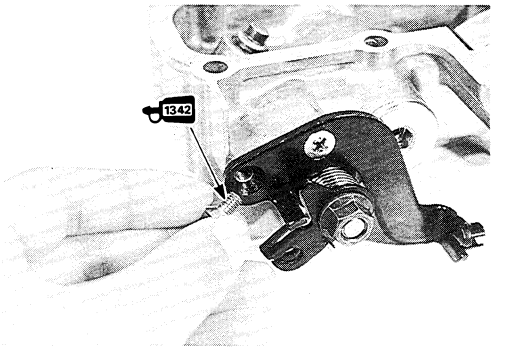

## CAMSHAFTS

If the engine produces abnormal noises, vibration or lacks power, a camshaft may be distorted or worn to the service limit. The camshaft runout should be checked. Also, check the cams and journals for wear or damage.
The front cylinder camshaft has the embossed letters "F" and the rear cylinder camshaft has the embossed letters "R". Also, the rear cylinder camshaft has the embossed letters "A" Ⓐ as shown.

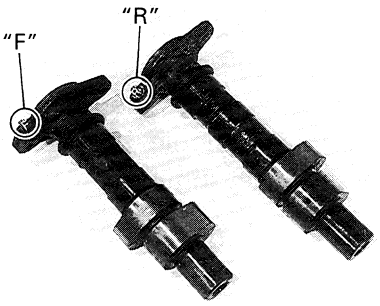


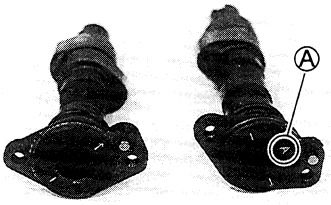


## CAM WEAR

Worn-down cams are often the cause of mistimed valve operation resulting in reduced power output.
Measure the cam height Ⓗ, using the micrometer. Replace a camshafts if the cams are worn to the service limit.

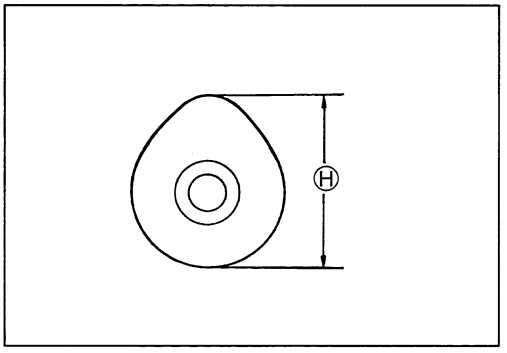


**TOOL 09900-20202: Micrometer (25–50 mm)**

**Service Limit**
**Cam height Ⓗ (IN): 35.38 mm (1.393 in)**
**(EX): 36.58 mm (1.440 in)**

## CAMSHAFT JOURNAL WEAR

Determine whether or not each journal is worn down to the limit by measuring the oil clearance with the camshaft installed in place. Measure the clearance using the plastigauge ①.

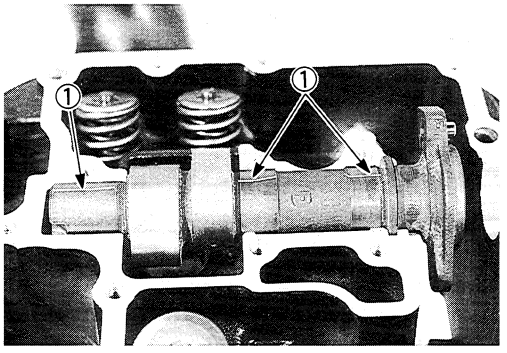


**TOOL 09900-22301: Plastigauge**
**09900-22302: Plastigauge**

**Service Limit**
**Camshaft journal oil clearance (IN & EX): 0.150 mm (0.0060 in)**

*NOTE:*
*Install each cylinder head cover to its original position. (See p. 3-58.)*

Tighten the cylinder head cover bolts evenly and diagonally to the specified torque.

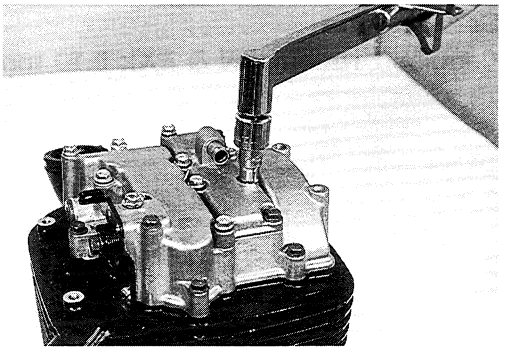

**Cylinder head cover bolt (6 mm): 10 N·m (1.0 kg-m, 7.0 lb-ft)**
**(8 mm): 25 N·m (2.5 kg-m, 18.0 lb-ft)**

*NOTE:*
*Do not rotate the camshafts with the plastigauge in place.*

Remove the cylinder head cover and measure the width of the compressed plastigauge using the envelope scale. This measurement should be taken at the widest part of the compressed plastigauge.

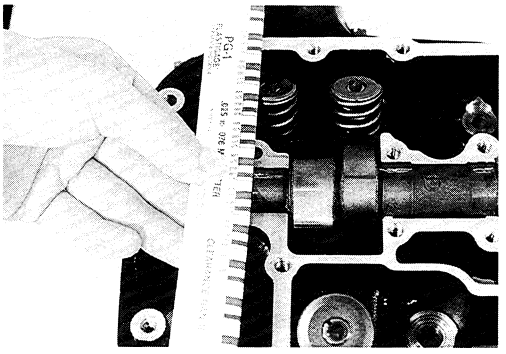

If the camshaft journal oil clearance exceeds the limit, measure the inside diameter of the camshaft journal and outside diameter of the camshaft journal. Replace the camshaft or the cylinder head and head cover depending upon which one exceeds the specification.

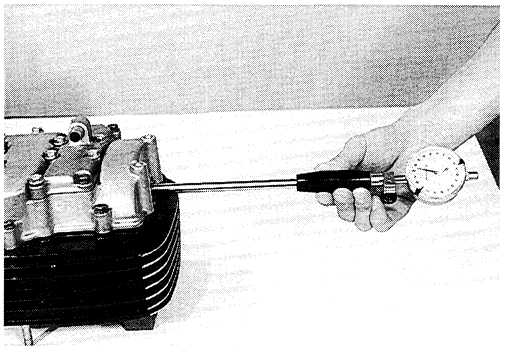

**TOOL 09900-20602: Dial gauge (1/1000, 1 mm)**
**09900-22403: Small bore gauge (18–35 mm)**

**Standard**
**Camshaft journal holder I.D.**
**(Front head right side, rear head left side):**
**20.012–20.025 mm (0.7879–0.7884 in)**

**(Front head left side, rear head right side):**
**25.012–25.025 mm (0.9847–0.9852 in)**

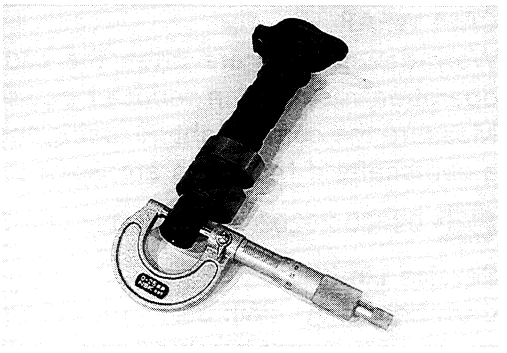

**TOOL 09900-20205: Micrometer (0–25 mm)**

**Standard**
**Camshaft journal O.D.**
**(Front head right side, rear head left side):**
**19.959–19.980 mm (0.7858–0.7866 in)**

**(Front head left side, rear head right side):**
**24.959–24.980 mm (0.9826–0.9835 in)**

## CAMSHAFT RUNOUT

Measure the runout using the dial gauge. Replace the camshaft if the runout exceeds the limit.

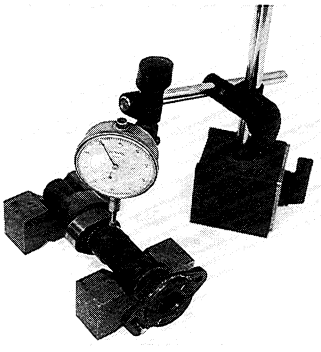

**TOOL 09900-20606: Dial gauge (1/100 mm, 10 mm)**
**09900-20701: Magnetic stand**
**09900-21304: V-block (100 mm)**

**Service Limit**
**Camshaft runout (IN & EX): 0.10 mm (0.004 in)**

## CYLINDER HEAD

- Using the special tools, compress the valve spring and remove the valve cotters ① from the valve stem.

**TOOL 09916-14510: Valve lifter**
**09916-14910: Valve lifter attachment**
**09916-84511: Tweezers**

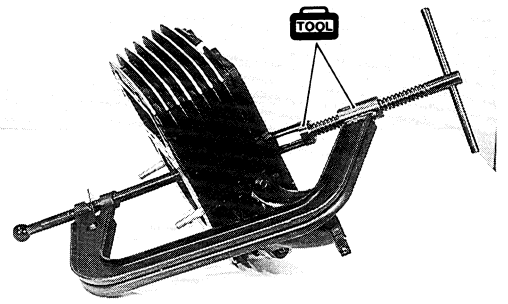


- Remove the valve spring retainers ② and the inner and outer valve springs ③.

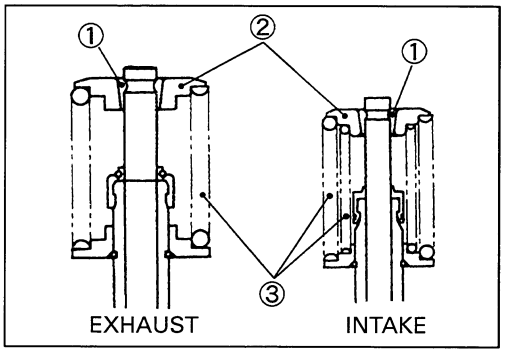


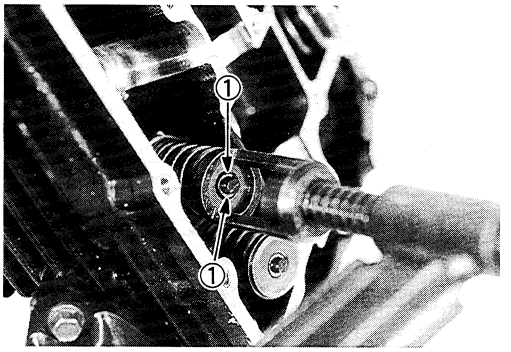


- Remove the valves from the combustion chamber side.

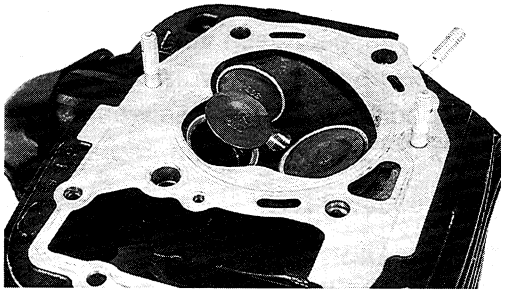

- Remove the valve spring seats.
- Remove the oil seals.

**⚠ CAUTION**

**The removed oil seals must be replace with new ones.**

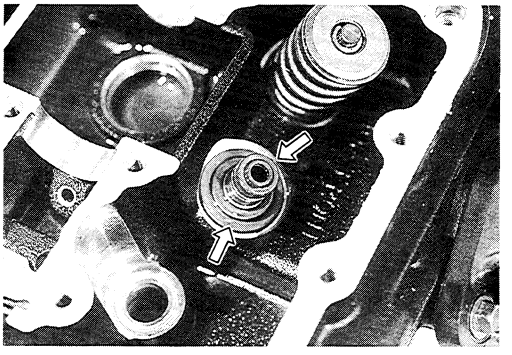

## CYLINDER HEAD DISTORTION

Decarbonize the combustion chambers.
Check the gasketed surface of the cylinder head for distortion. Use a straightedge and thickness gauge. Take clearance readings at several places. If readings exceed the service limit, replace the cylinder head.

**TOOL 09900-20803: Thickness gauge**

**Service Limit**
**Cylinder head distortion: 0.05 mm (0.002 in)**

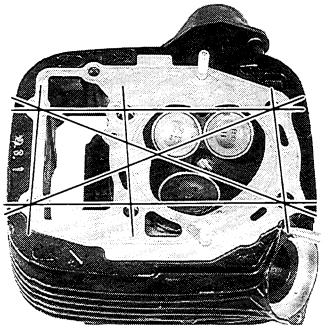

### VALVE STEM RUNOUT

Support the valve with "V" blocks, as shown, and check its runout using the dial gauge.
If the runout exceeds the service limit, replace the valve.

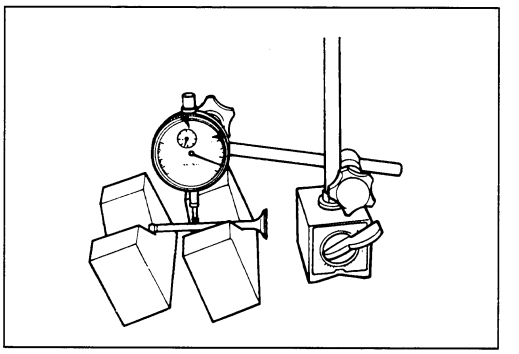

**TOOL 09900-20606: Dial gauge (1/100 mm)**
**09900-20701: Magnetic stand**
**09900-21304: V-block (100 mm)**

**Service Limit**
**Valve stem runout: 0.05 mm (0.002 in)**

### VALVE HEAD RADIAL RUNOUT

Place the dial gauge at a right angle to the valve head face, and measure the valve head radial runout.
If it measures more than the service limit, replace the valve.

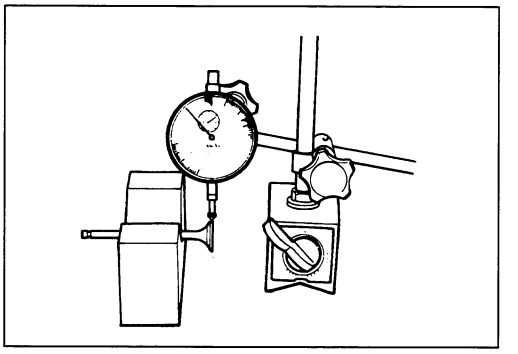

**TOOL 09900-20606: Dial gauge (1/100 mm)**
**09900-20701: Magnetic stand**
**09900-21304: V-block (100 mm)**

**Service Limit**
**Valve head radial runout: 0.03 mm (0.001 in)**

### VALVE FACE WEAR

Visually inspect each valve face for wear. Replace any valve with an abnormally worn face. The thickness of the valve face decreases as the face wears. Measure the valve face Ⓣ.
If it is out of specification, replace the valve with a new one.

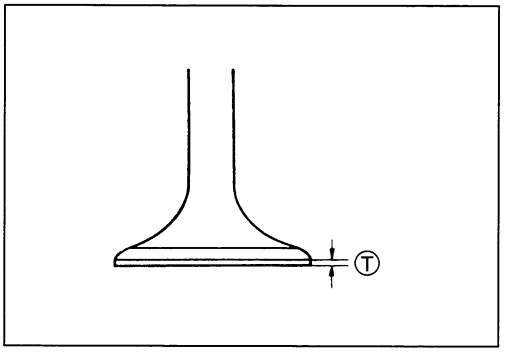


**TOOL 09900-20102: Vernier calipers**

**Service Limit**
**Valve head thickness Ⓣ: 0.5 mm (0.02 in)**

### VALVE STEM END CONDITION

Inspect the valve stem end face for pitting and wear. If pitting or wear is present, resurface the valve stem end. Make sure that the length ① is not less than the service limit. If this length becomes less than the service limit, replace the valve.

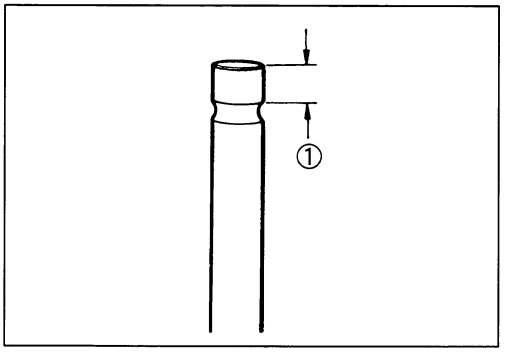


**Service Limit**
**Valve stem end length (IN): 2.5 mm (0.10 in)**
**(EX): 2.2 mm (0.09 in)**

### VALVE STEM DEFLECTION

Lift the valve about 10 mm (0.39 in) from the valve seat. Measure the valve stem deflection in two directions, "X" and "Y", perpendicular to each other. Position the dial gauge as shown. If the deflection exceeds the service limit, then determine whether the valve or the guide should be replaced with a new one.

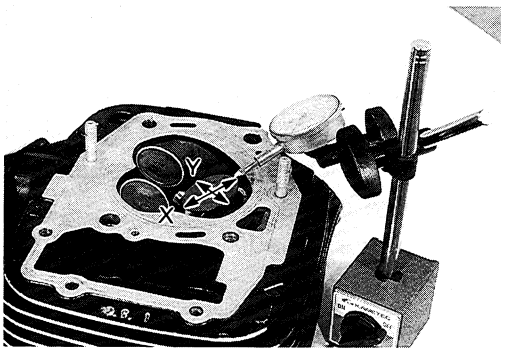


**TOOL 09900-20606: Dial gauge (1/100 mm)**
**09900-20701: Magnetic stand**

**Service Limit**
**Valve stem deflection (IN & EX): 0.35 mm (0.014 in)**

### VALVE STEM WEAR

Measure the valve stem O.D. using the micrometer. If it is out of specification, replace the valve with a new one. If the valve stem O.D. is within the specification but the valve stem deflection is not, replace the valve guide. After replacing the valve or valve guide, recheck the deflection.

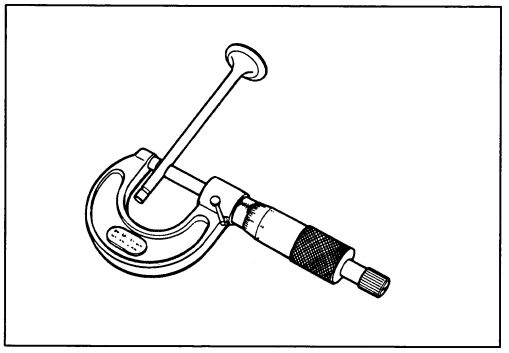

**TOOL 09900-20205: Micrometer (0–25 mm)**

**Standard**
**Valve stem O.D (IN) : 5.475–5.490 mm (0.2156–0.2161 in)**
**(EX) : 6.945–6.960 mm (0.2734 –0.2740 in)**

*NOTE:*
*If valve guides have to be replaced, refer to the valve guide servicing steps below.*

### VALVE GUIDE SERVICING

- Using the valve guide remover, drive the valve guide out toward the intake or exhaust camshaft side.

**TOOL 09916-44910: Valve guide remover/installer (For intake)**
**09916-44511: Valve guide remover/installer (For exhaust)**

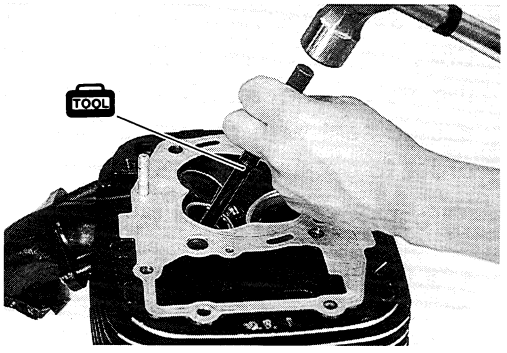


*NOTE:*
** Discard the removed valve guide subassemblies.*
** Only oversized valve guides are available as replacement parts.*

- Re-finish the valve guide holes in the cylinder head by using the reamer and handle.

**TOOL 09916-34580: Valve guide reamer 10.8 mm (For intake)**
**09916-34531: Valve guide reamer 12.3 mm (For exhaust)**
**09916-34542: Reamer handle**

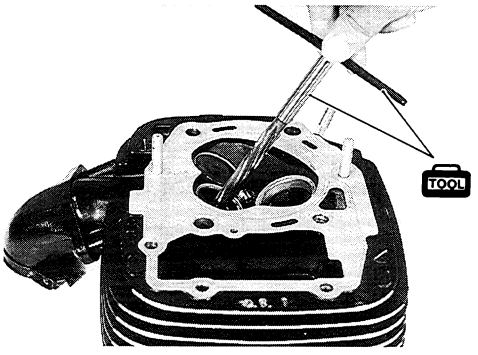

- Install the ring onto each valve guide. Be sure to use new rings.
- Oil the stem hole of each valve guide and drive the guide into the guide hole until the ring completely seated by using the valve guide installer.
  ① Valve guide
  ② Cylinder head
  ③ Ring

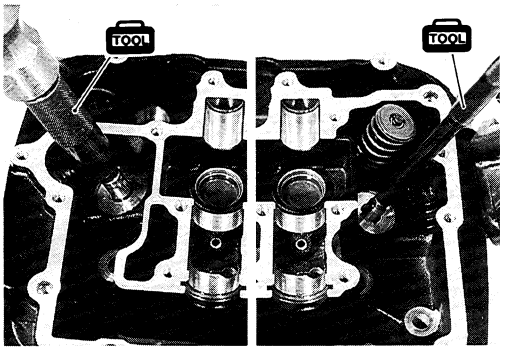


**TOOL 09916-44910: Valve guide remover/installer (For intake)**
**09916-57321: Valve guide installer handle (For exhaust)**

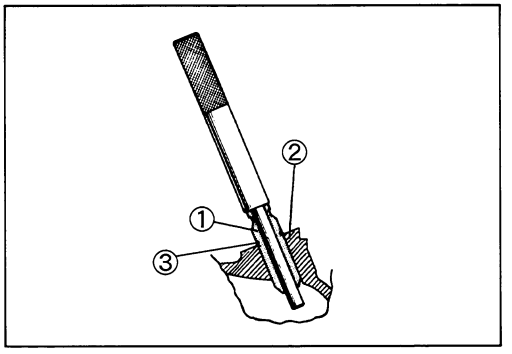


**⚠ CAUTION**

**Failure to oil the valve guide hole before driving the new guide into place may result in a damaged guide or head.**

- After fitting the valve guides, re-finish their guiding bores using the reamer. Be sure to clean and oil the guides after reaming.

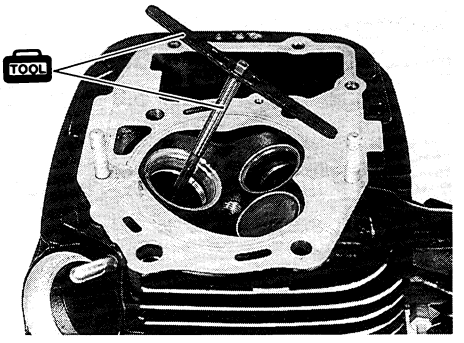


**TOOL 09916-34550: Valve guide reamer 5.5 mm (For intake)**
**09916-34520: Valve guide reamer 7.0 mm (For exhaust)**
**09916-34542: Valve guide reamer handle**

*NOTE:*
*Insert the reamer from the combustion chamber and always turn the reamer handle clockwise.*

**VALVE SEAT WIDTH**

- Coat the valve seat uniformly with Prussian blue. Install the valve and attach a valve lapper onto it. Tap the coated seat with the valve face in a rotating manner, in order to obtain a clear impression of the seating contact,

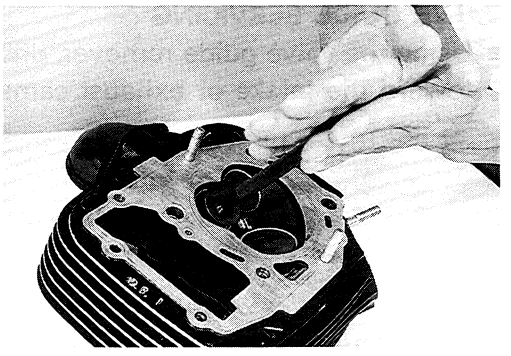

**TOOL 09916-10911: Valve lapper set**

- The ring-like dye impression left on the valve face must be continuous without any breaks. In addition, the width of the dye ring, which is the valve seat width, must be within the following specification.

**Standard**
**Valve seat width Ⓦ (IN) : 0.9–1.1 mm (0.035–0.043 in)**
**(EX) : 1.0–1.2 mm (0.039–0.047 in)**

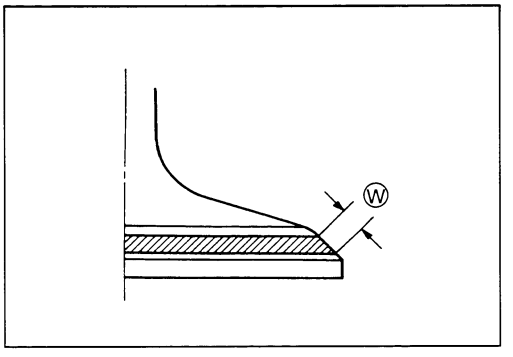


If the valve seat is out of specification, re-cut the seat.

## VALVE SEAT SERVICING

The valve seats ① for both the intake and exhaust valves are machined to two different angles. The seat contact surface is cut at 45°.

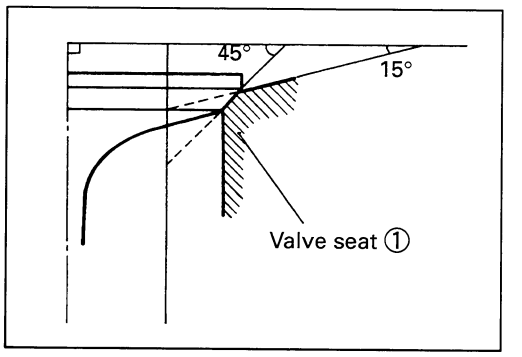


TOOL

| | IN | | EX | |
|---|---|---|---|---|
| | 45° | 15° | 45° | 15° |
| Valve seat cutter | N-229 or -608 | N-229 or -212 | N-634 | N-217 |
| Solid pilot | N-140-5.5 | ← | N-110-1 | ← |

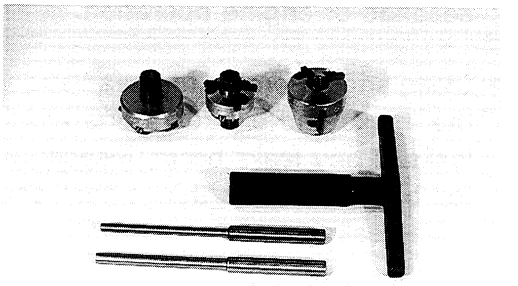

*NOTE:*
*The valve seat contact area must be inspected after each cut.*

TOOL **09916-24900: Valve seat cutter set**
**09916-27720: Valve seat cutter (N-229)**
**09916-24935: Valve seat cutter (N-608)**
**09916-24480: Solid pilot (N-140-5.5)**
**09916-29030: Solid pilot (N-110-1)**

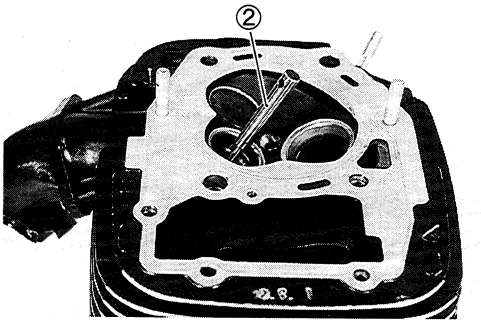


- When installing the solid pilot ②, rotate it slightly. Seat the pilot snugly. Install the 45° cutter, attachment and T-handle.
- Using the 45° cutter, descale and clean up the seat. Rotate the cutter one or two turns.
- Measure the valve seat width after every cut.
- If the valve seat is pitted or burned, use the 45° cutter to condition the seat some more.

*NOTE:*
*Cut only the minimum amount necessary from the seat to prevent the possibility of the valve stem becoming too close to the rocker arm for correct valve contact angle.*

If the contact area is too high on the valve, or if it is too wide, use the 15° cutter to lower and narrow the contact area.

Contact area too high and too wide on face of valve

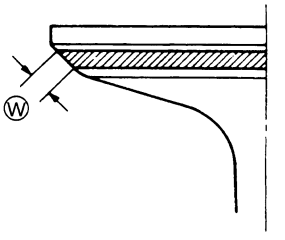


If the contact area is too low or too narrow, use the 45° cutter to raise and widen the contact area.

Contact area too low and too narrow on face of valve

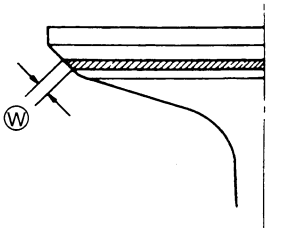

- After the desired seat position and width is achieved, use the 45° cutter very lightly to clean up any burrs caused by the previous cutting operations.

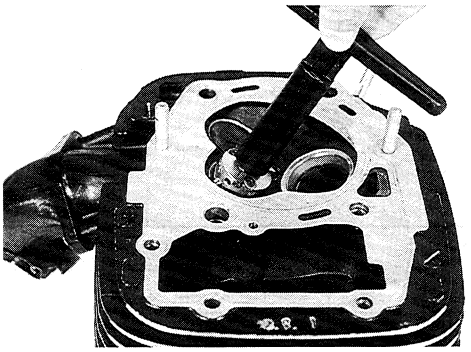

**⚠ CAUTION**

**DO NOT use lapping compound after the final cut is made. The finished valve seat should have a velvety smooth finish but not a highly polished or shiny finish. This will provide a soft surface for the final seating of the valve which will occur during the first few seconds of engine operation.**

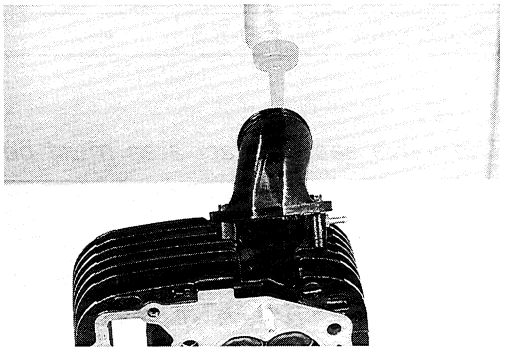

- Clean and assemble the head and valve components. Fill the intake and exhaust ports with gasoline to check for leaks. If any leaks occur, inspect the valve seat and face for burrs or other things that could prevent the valve from sealing.

**⚠ WARNING**

**Always use extreme caution when handling gasoline.**

## VALVE SPRING

The force of the coil spring keeps the valve seat tight. A weakened spring result in reduced engine power output and often accounts for the chattering noise coming from the valve mechanism.

Check the valve springs for proper strength by measuring their free length and also by the force required to compress them. If the spring length is less than the service limit or if the force required to compress the spring does not fall within the specified range, replace both the inner and outer springs as a set.

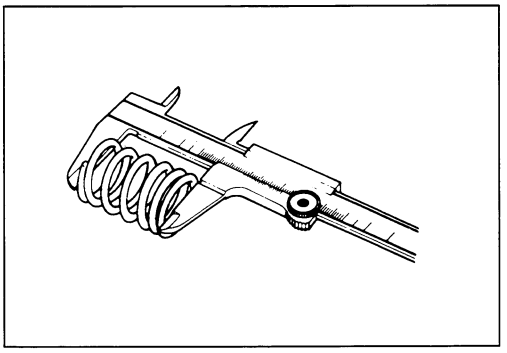

**TOOL 09900-20102: Vernier calipers**

**Service limit**

**Valve spring free length (IN) INNER : 35.0 mm (1.38 in)**
**OUTER: 37.8 mm (1.49 in)**

**Valve spring free length (EX): 40.6 mm (1.69 in)**

**Standard**

**Valve spring tension (IN) INNER : 5.3–6.5 kg/28.0 mm (11.68–14.33 lbs/1.10 in)**
**OUTER: 14.0–14.2 kg/31.5 mm (30.86–31.31 lbs/1.24 in)**

**Valve spring tension (EX): 20.3–23.3 kg/35.0 mm (44.75–51.37 lbs/1.38 in)**

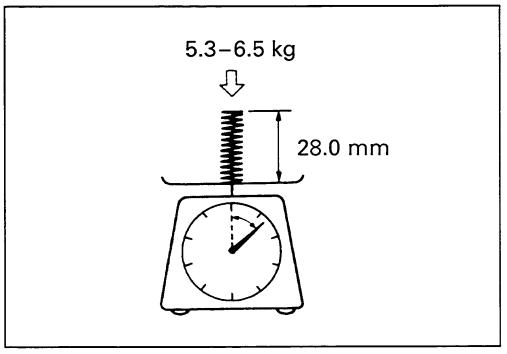

## CYLINDER HEAD REASSEMBLY

- Install each valve spring seat.
- Oil each oil seal ① and press-fit them into position using the valve guide installer.

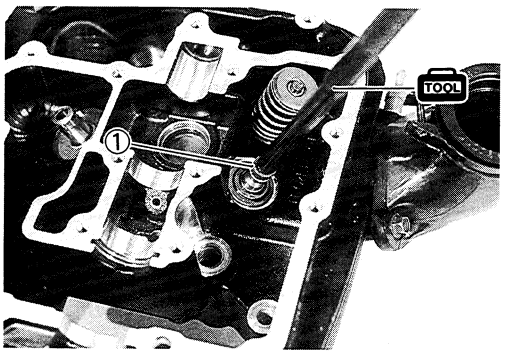


**TOOL 09916-44910: Valve guide remover/installer (For intake)**
**09916-44511: Valve guide remover/installer (For exhaust)**

**⚠ CAUTION**

**Do not reuse the oil seals.**

- Insert the valves with their stems coated with high quality molybdenum disulfide lubricant (SUZUKI MOLY PASTE).
  Coat the entire stem making sure that there are no gaps.

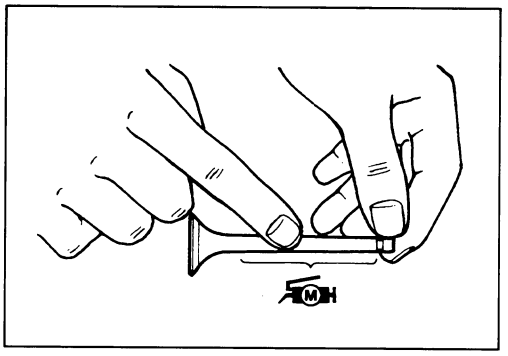


**⚠ CAUTION**

**When inserting each valve, take care not to damage the lip of the oil seal.**

**M H 99000-25140: SUZUKI MOLY PASTE**

- Install the valve springs with the smaller pitch Ⓐ facing the cylinder head.
  Ⓐ Smaller pitch
  Ⓑ Larger pitch
  Ⓒ Up
  Ⓓ Paint mark
  Ⓔ Exhaust
  Ⓕ Intake (Outer)
  Ⓖ Intake (Inner)

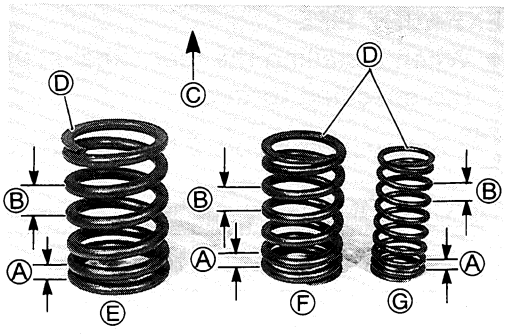


- Install the valve spring retainer, press down the springs using the valve lifter and then install the cotter halves on to the stem end. Then, release the valve lifter to allow the cotter ② to wedge between the retainer and the valve stem. Be sure that the rounded lip Ⓗ of the cotter fits snugly into the groove Ⓘ in the stem end.

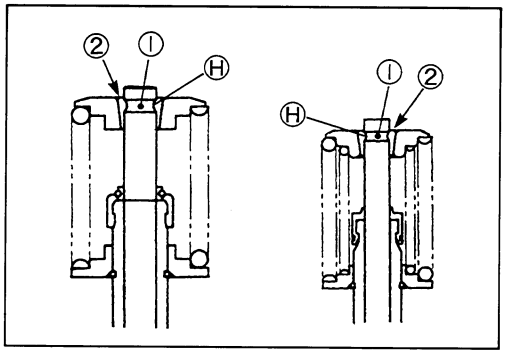


**TOOL 09916-14510: Valve litter**
**09916-14910: Valve litter attachment**
**09916-84511: Tweezers**

**⚠ CAUTION**

**Be sure to install all of the parts in their original positions.**

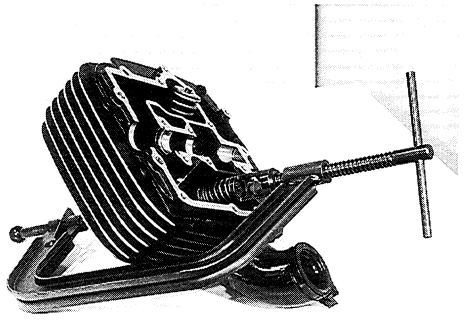

### INTAKE PIPE

- When installing the intake pipe, apply grease to the O-ring.

**99000-25010: SUZUKI SUPER GREASE "A"**

- When installing the intake pipe screws, apply a small quantity of THREAD LOCK "1342" to the screws.

**99000-32050: THREAD LOCK "1342"**

*NOTE:*
*Make sure that the arrow mark Ⓐ faces front.*

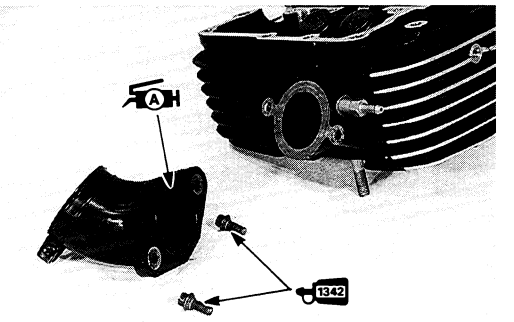

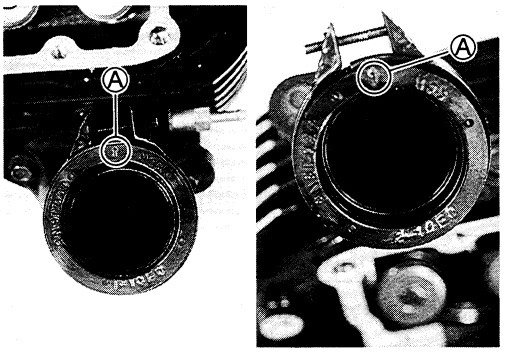

**⚠ CAUTION**

**Use the new O-ring to prevent sucking air from the joint.**

### EXHAUST PIPE

- When installing the rear exhaust pipe, tighten its bolts to the specified torque.

**Exhaust pipe bolt: 23 N·m (2.3 kg-m, 16.5 lb-ft)**

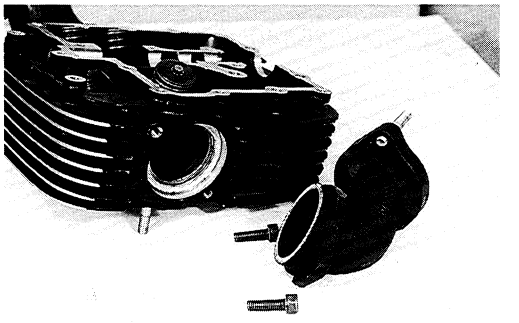

**⚠ CAUTION**

**Use the new gasket to prevent exhaust gas leakage.**

## CAMSHAFT/CYLINDER HEAD/CYLINDER HEAD COVER INSTALLATION

Refer to the engine reassembly and the engine installation sections.

* **ENGINE REASSEMBLY ..... See pp. 3-31 to -60.**
* **ENGINE INSTALLATION ..... See pp. 3-11 to -15.**

# CYLINDER/PISTON

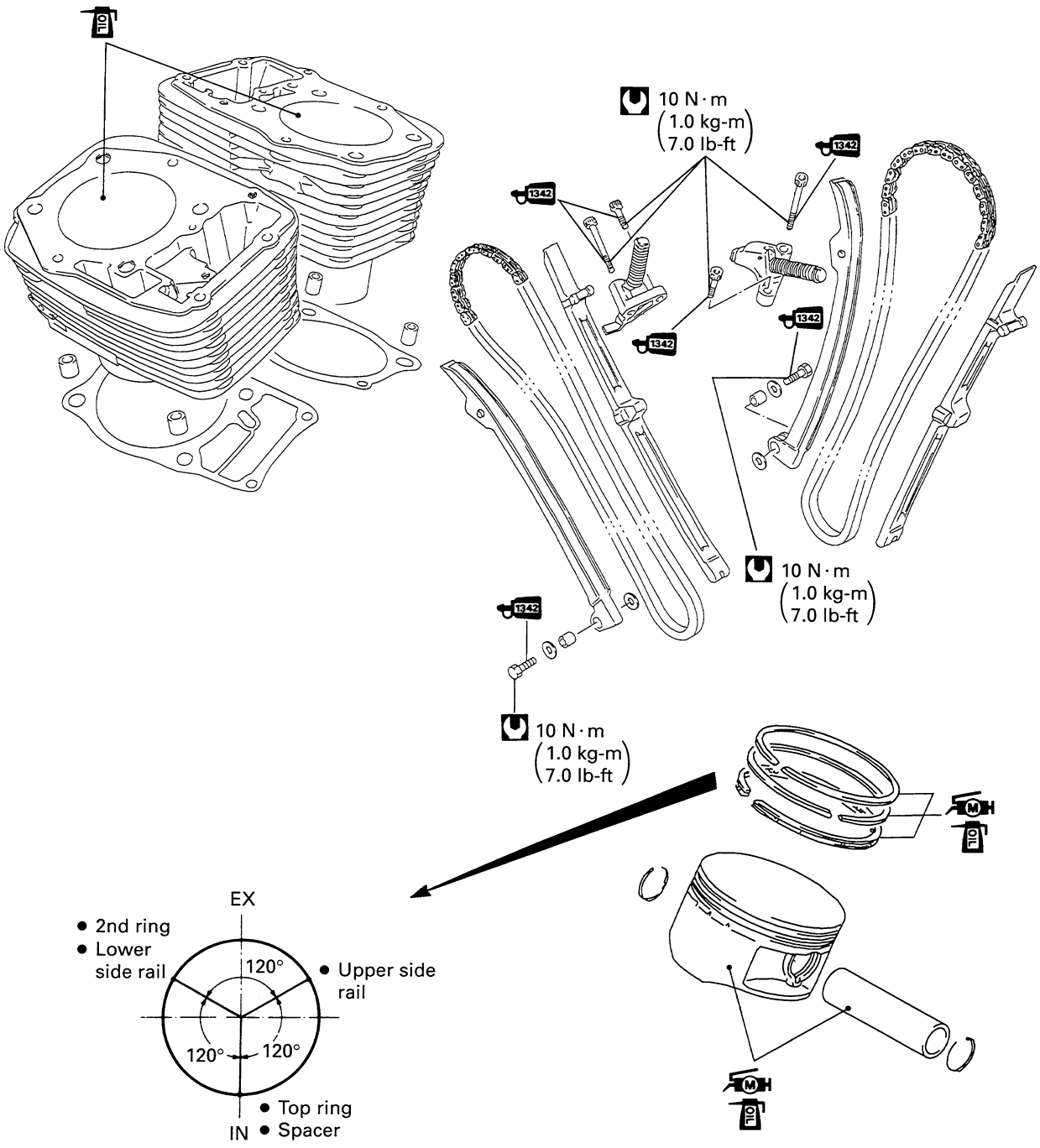


PISTON RING END GAP POSITIONS

## CONTENTS


*CYLINDER/PISTON REMOVAL* ..... *3B- 1*

*CYLINDER/PISTON SERVICING* ..... *3B- 1*

*CYLINDER/PISTON INSTALLATION* ..... *3B- 6*

## CYLINDER/PISTON REMOVAL

These engine components require engine removal and disassembly. Refer to the engine removal and engine disassembly sections.

* **ENGINE REMOVAL ..... See pp. 3-2 to -10.**
* **ENGINE DISASSEMBLY ..... See pp. 3-16 to -30.**

## CYLINDER/PISTON SERVICING

### CAM CHAIN TENSIONER REMOVAL

- Remove the cam chain tensioner by removing the bolts.

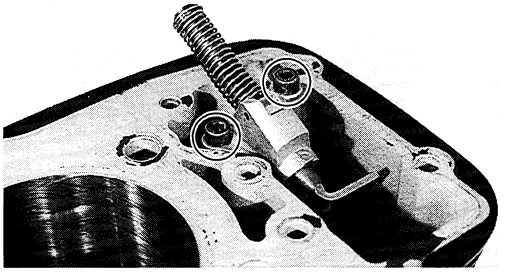

### CYLINDER DISTORTION

Check the gasket surface of the cylinder for distortion. Use a straightedge and thickness gauge. Take clearance readings at several places. If any reading exceeds the service limit, replace the cylinder.

**TOOL 09900-20803: Thickness gauge**

**Service Limit**
**Cylinder distortion: 0.05 mm (0.002 in)**

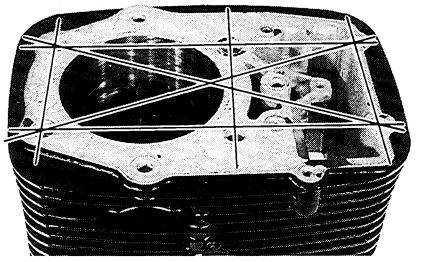

### CYLINDER BORE

Inspect the cylinder wall for any scratches, nicks or other damage. Measure the cylinder bore diameter at six places.

**TOOL 09900-20508: Cylinder gauge set**

**Standard**
**Cylinder bore: 96.000–96.015 mm (3.7795–3.7801 in)**

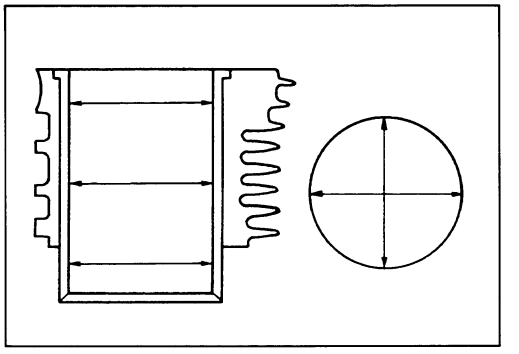

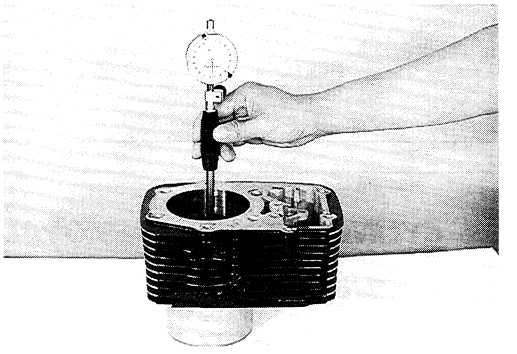

## PISTON DIAMETER

Measure the piston diameter using the micrometer at 16 mm (0.6 in) Ⓐ from the skirt end.
If the measurement is less than the service limit, replace the piston.

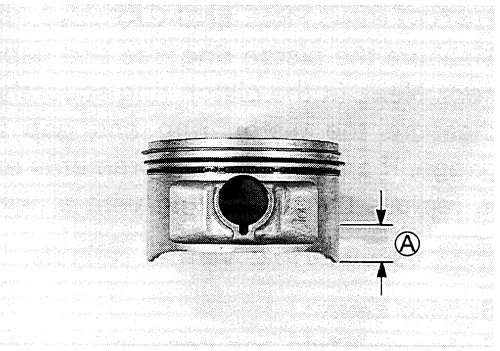


**TOOL 09900-20204: Micrometer (75–100 mm)**

**Service Limit**
**Piston diameter: 95.88 mm (37.7748 in)**

## PISTON TO CYLINDER CLEARANCE

As a result of the previous measurement, if the piston to cylinder clearance exceeds the following limit, replace both cylinder and piston.

**Service Limit**
**Piston to cylinder clearance: 0.12 mm (0.0047 in)**

## PISTON RING TO GROOVE CLEARANCE

Measure the side clearances of the 1st and 2nd piston rings using the thickness gauge, If any of the clearances exceed the limit, replace both the piston and piston rings.

**TOOL 09900-20803: Thickness gauge**
**09900-20205: Micrometer (0–25 mm)**

**Service Limit**
**Piston ring to groove clearance**
**(1st) : 0.180 mm (0.007 in)**
**(2nd) : 0.150 mm (0.006 in)**

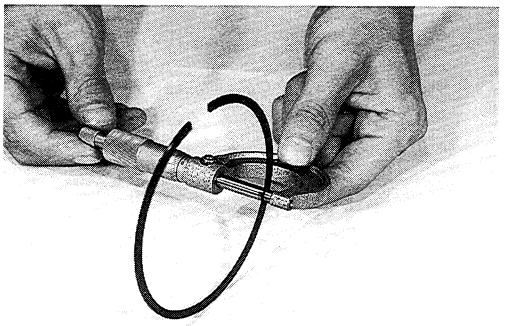

**Standard**
**Piston ring groove width**
**(1st) : 1.210–1.230 mm (0.0476–0.0484 in)**
**(2nd) : 1.510–1.530 mm (0.0594–0.0602 in)**
**(Oil) : 2.810–2.830 mm (0.1106–0.1114 in)**

**Standard**
**Piston ring thickness**
**(1st) : 1.160–1.175 mm (0.0457–0.0463 in)**
**(2nd) : 1.470–1.490 mm (0.0579–0.0587 in)**

## PISTON RING FREE END GAP AND PISTON RING END GAP

Measure the piston ring free end gap by using vernier calipers. Next, fit the piston ring squarely into the cylinder and measure the piston ring end gap by using a thickness gauge. If any of the measurements exceed the service limit, replace the piston ring with a new one.

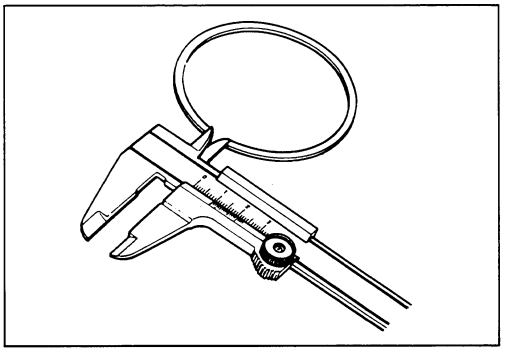

**TOOL 09900-20102: Vernier calipers**

**Service Limit**
**Piston ring free end gap (1st) : 10.8 mm (0.43 in)**
**(2nd): 11.2 mm (0.44 in)**

**TOOL 09900-20803: Thickness gauge**

**Service Limit**
**Piston ring end gap (1st) : 0.70 mm (0.028 in)**
**(2nd) : 1.00 mm (0.039 in)**

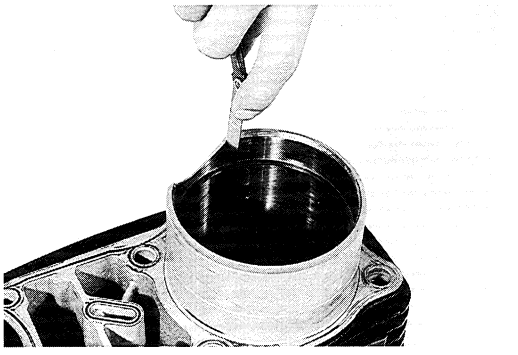

## PISTON PIN AND PIN BORE

Measure the piston pin bore inside diameter using the small bore gauge. If either is out of specification or the difference between these measurement is more than the limits, replace the piston.

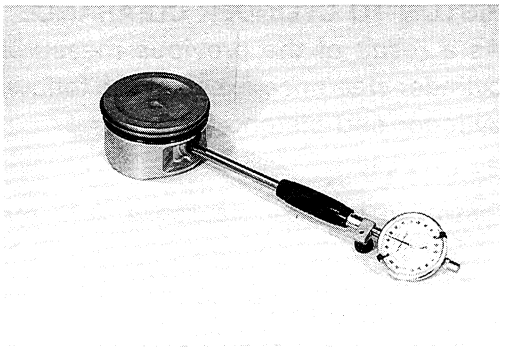

**TOOL 09900-20602: Dial gauge (1/1000 mm, 1 mm)**
**09900-22403: Small bore gauge (18–35 mm)**

**Service Limit**
**Piston pin bore I.D.: 23.030 mm (0.9067 in)**

Measure the piston pin outside diameter at three positions using the micrometer. If any of the measurements are out of specification, replace the piston pin.

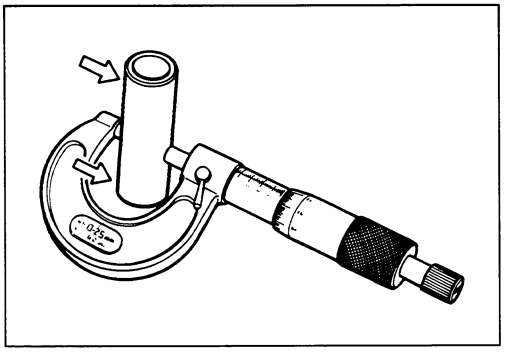

**TOOL 09900-20205: Micrometer (0–25 mm)**

**Service Limit**
**Piston pin O.D.: 22.980 mm (0.9047 in)**

## PISTON RING INSTALLATION

- Install the oil ring first, then the 2nd ring and finally the 1st ring.

*NOTE:*
*The 1st and 2nd piston rings differ in shape.*

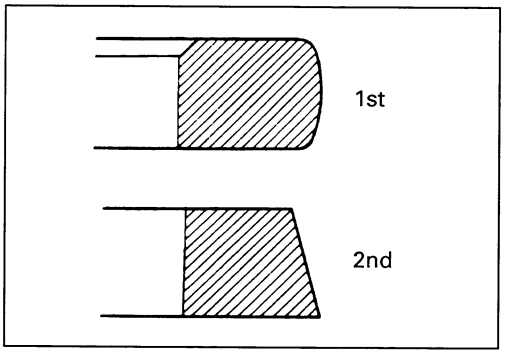


- The 1st and 2nd piston rings should be installed with the "T" mark facing up.

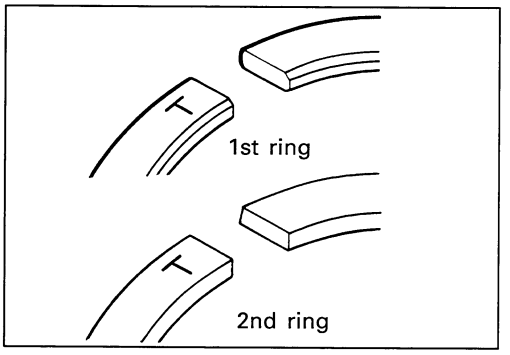


- First, install a spacer ① into the oil ring groove and then install the two side rails ②. The spacer and side rails do not have a designated top and bottom. They can be installed in any position.

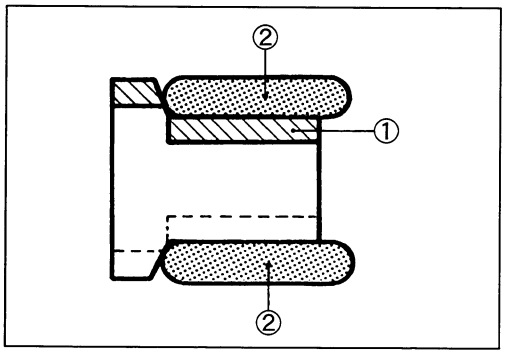


- Position the piston ring gaps as shown. Before inserting each piston into its cylinder, check that the gaps are properly positioned.

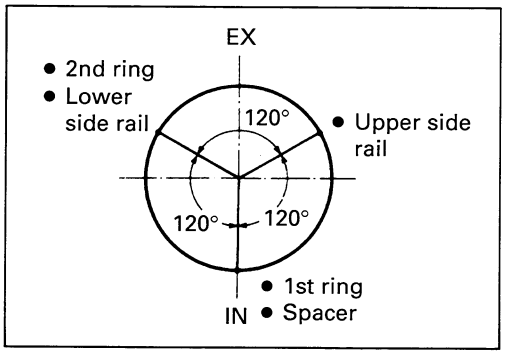


*NOTE:*
*Install the pistons with the indent Ⓐ facing towards the exhaust side.*

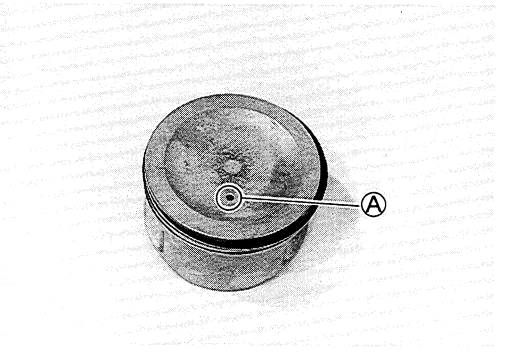

## CAM CHAIN TENSION ADJUSTER

The cam chain tension adjusters are maintained at the proper tension automatically.
Unlock the ratchet Ⓐ, and move the push rod Ⓑ in place to see if it slides smoothly. If any stickiness is noted or ratchet mechanism is faulty, replace the cam chain tension adjuster assembly with a new one.

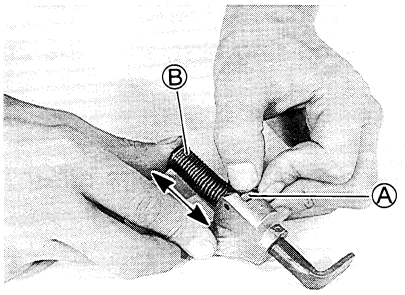


*NOTE:*
*The cam chain tension adjusters can be distinguished by the embossed mark, "F" and "R", on the body.*
*F: Front (No.2) cam chain tension adjuster*
*R: Rear (No.1) cam chain tension adjuster*

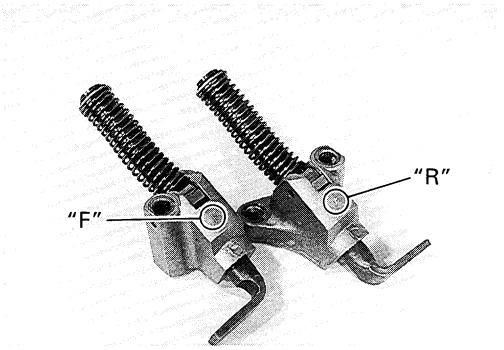


## CAM CHAIN GUIDE

Check the contacting surface of the cam chain guide. If it is worn or damaged, replace it with a new one.

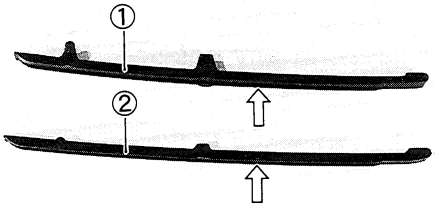


*NOTE:*
*The cam chain guide can be distinguished by it shape.*
*① Front (No.2) cam chain guide*
*② Rear (No.1) cam chain guide*

## CAM CHAIN TENSIONER

Check the contacting surface of the cam chain tensioner. If it is worn or damaged, replace it with a new one.
If it is necessary to replace the cam chain tensioner, remove the primary drive gear and generator rotor. (See pp. 3-23 and -27.)

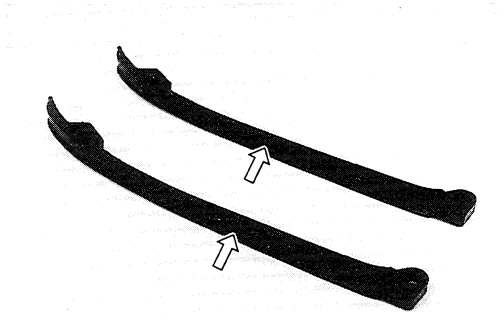

*NOTE:*
*These cam chain tensioners are the same parts.*

### CAM CHAIN TENSION ADJUSTER INSTALLATION

- Install the cam chain tension adjuster.

*NOTE:*
*Apply THREAD LOCK "1342" to the threads of the cam chain tension adjuster bolts and then tighten them to the specified torque.*

**1342 99000-32050: THREAD LOCK "1342"**

**Cam chain tension adjuster: 10 N·m (1.0 kg-m, 7.0 lb-ft)**

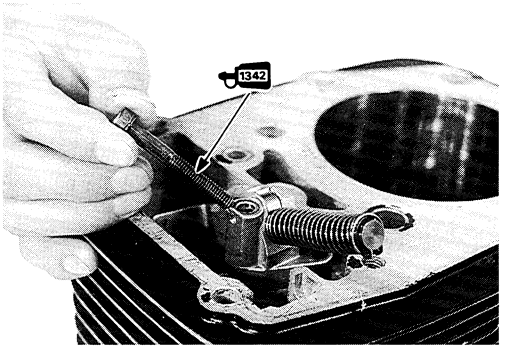


## CYLINDER/PISTON INSTALLATION

Refer to the engine reassembly and the engine installation sections.

* **ENGINE REASSEMBLY ..... See pp. 3-31 to -60.**
* **ENGINE INSTALLATION ..... See pp. 3-11 to -15.**

# CLUTCH

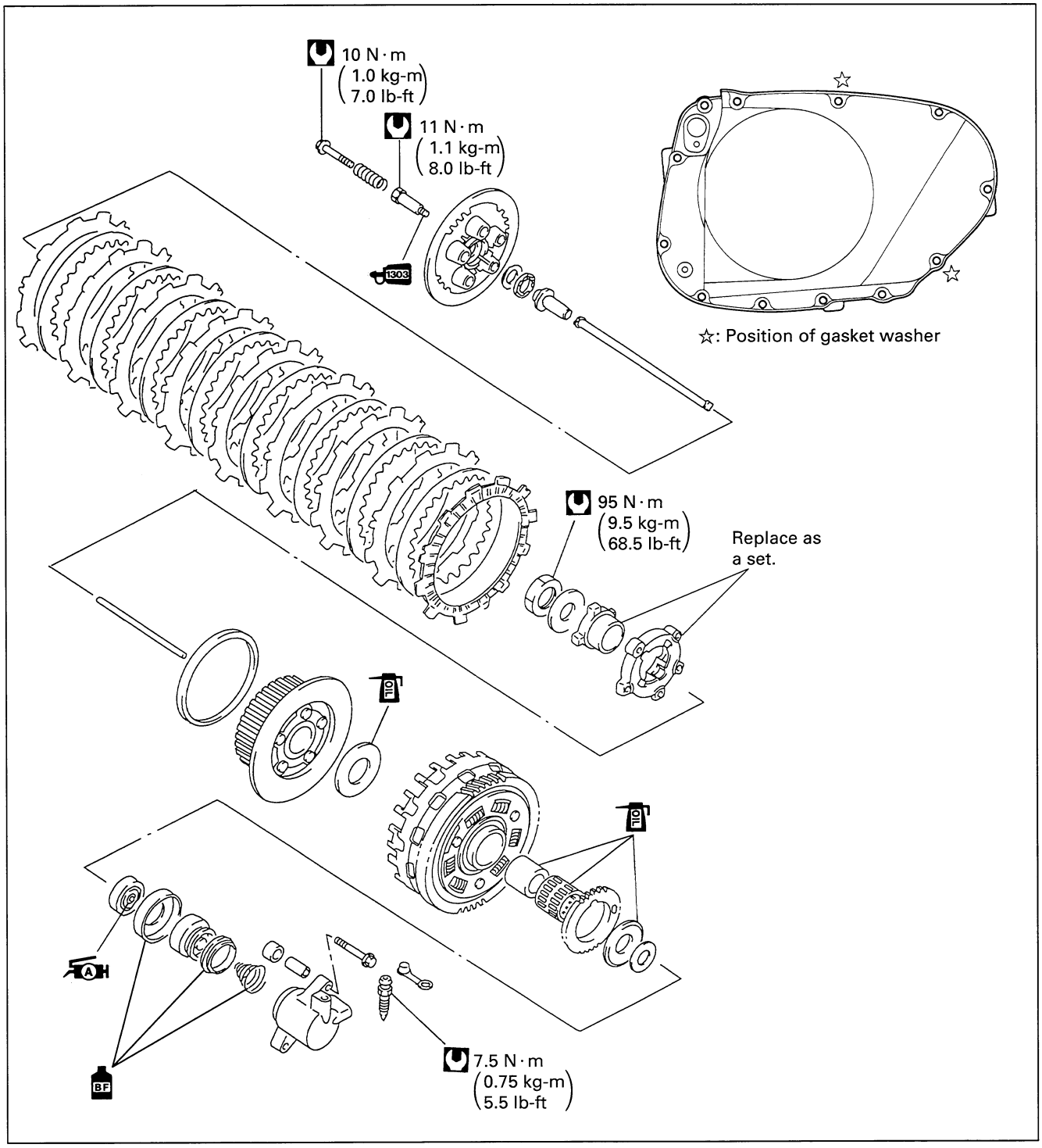


CONTENTS


CLUTCH REMOVAL ..... 3C- 1
CLUTCH RELEASE CYLINDER REMOVAL ..... 3C- 2
CLUTCH/CLUTCH RELEASE CYLINDER INSPECTION ..... 3C- 3
CLUTCH INSTALLATION ..... 3C- 4
CLUTCH RELEASE CYLINDER INSTALLATION ..... 3C- 6

## CLUTCH REMOVAL

After draining the engine oil, the following components must be removed in the described order before removing the clutch components.

*NOTE:*
*Refer to the following pages for the details of each step.*

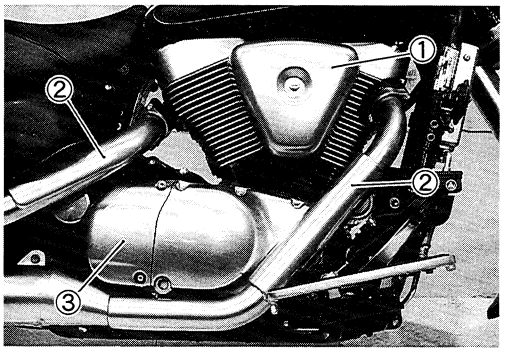


**Drain:**
- Engine oil (See p. 2-6.)

**Remove:**
- Engine side box ① (See p. 3-3.)
- Exhaust pipe and muffler ② (See p. 3-5.)
- Rear clutch cover ③
- Clutch cover (See p. 3-20.)

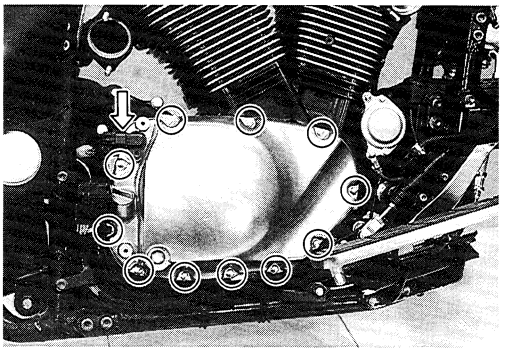

- Dowel pins
- Gasket

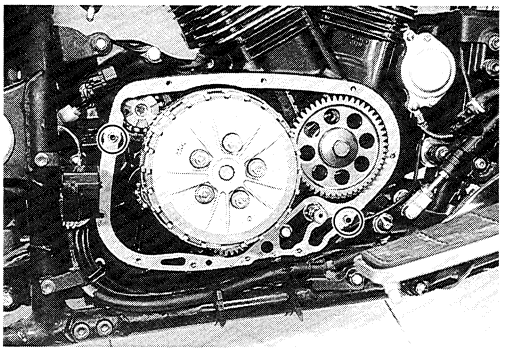

- Clutch spring
- Pressure plate (See p. 3-20.)

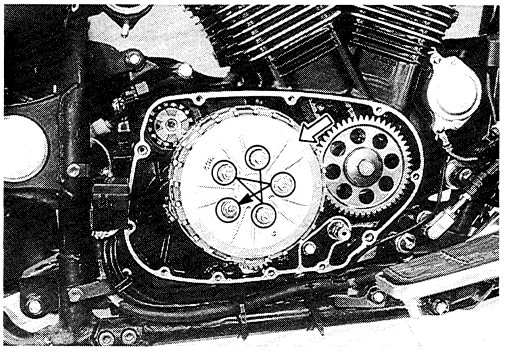

- Clutch push piece
- Bearing
- Washer (See p. 3-21.)

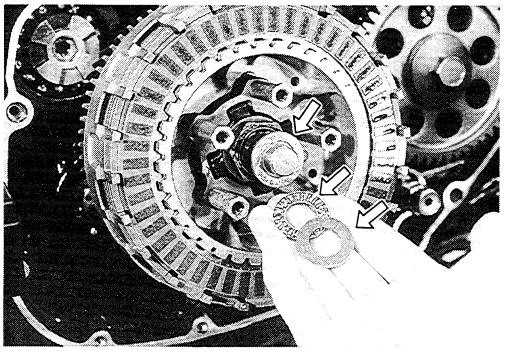

- Clutch push rod
- Clutch plates

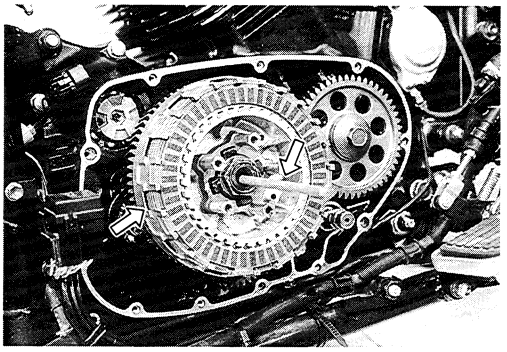

- Clutch sleeve hub
- Clutch drive cam
- Clutch driven cam (See pp. 3-21 and -22.)

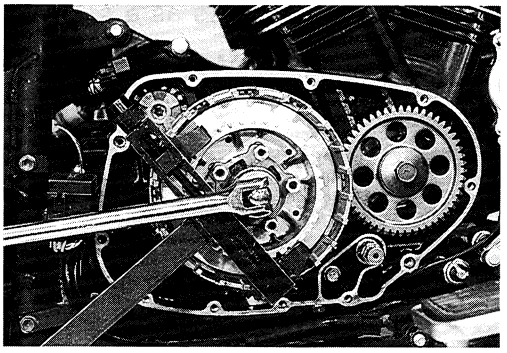

- Thrust washer
- Primary driven gear assembly (See p. 3-22.)

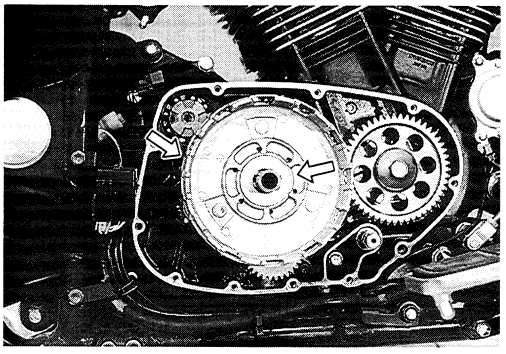

- Needle roller bearing
- Thrust washer
- Spacers (See p. 3-22.)

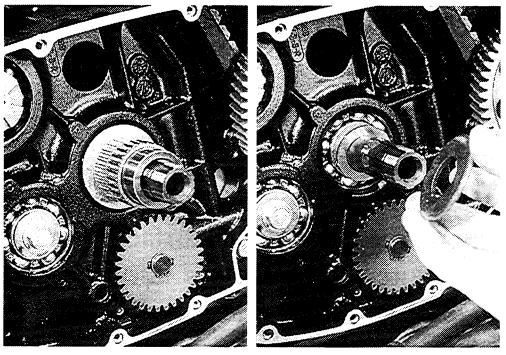

## CLUTCH RELEASE CYLINDER REMOVAL AND DISASSEMBLY

See pp. 6-59 and -60.

# CLUTCH/CLUTCH RELEASE CYLINDER INSPECTION

## CLUTCH DRIVE PLATES

*NOTE:*
*Wipe off any engine oil from the clutch drive plates using a clean rag.*

Measure the thickness of the clutch drive plates using vernier calipers.
If a clutch drive plate is not within the standard range, replace the clutch plates as a set.

**TOOL 09900-20102: Vernier calipers**

**Standard**
**Clutch drive plate thickness: 2.90–3.10 mm (0.114–0.122 in)**

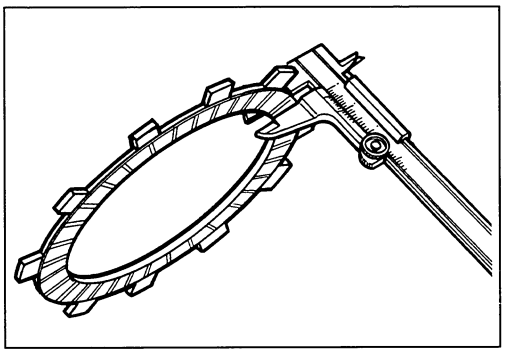
Measuring thickness

Measure the claw width of the clutch drive plates using vernier calipers. If a clutch drive plate is not within the service limit, replace the clutch plates as a set.

**TOOL 09900-20102: Vernier calipers**

**Service Limit**
**Clutch drive plate claw width: 14.8 mm (0.563 in)**

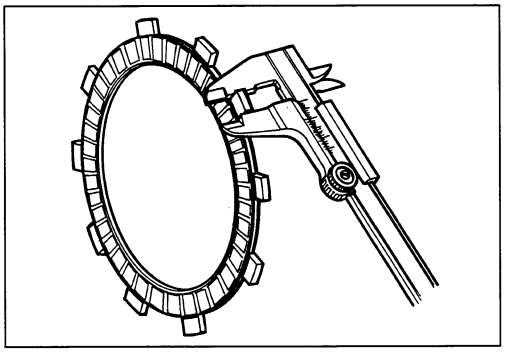
Measuring claw width

## CLUTCH DRIVEN PLATES

*NOTE:*
*Wipe off any engine oil from the clutch driven plates using a clean rag.*

Measure each clutch driven plate for distortion using the thickness gauge and surface plate.
If a clutch driven plate is not within the service limit, replace the clutch plates as a set.

**TOOL 09900-20803: Thickness gauge**

**Service Limit**
**Clutch driven plate distortion: 0.10 mm (0.004 in)**

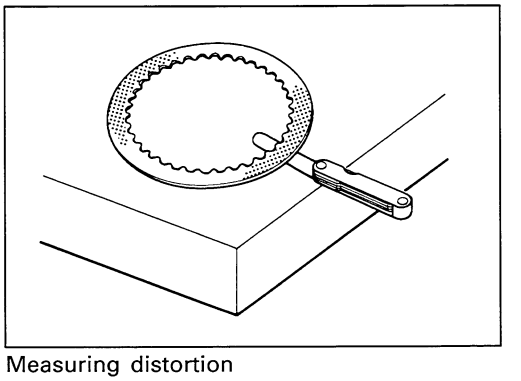
Measuring distortion

## CLUTCH SPRING FREE LENGTH

Measure the free length of each clutch spring using vernier calipers. If any spring is not within the service limit, replace all of the springs.

**TOOL 09900-20102: Vernier calipers**

**Service Limit**
**Clutch spring free length: 30.9 mm (1.22 in)**

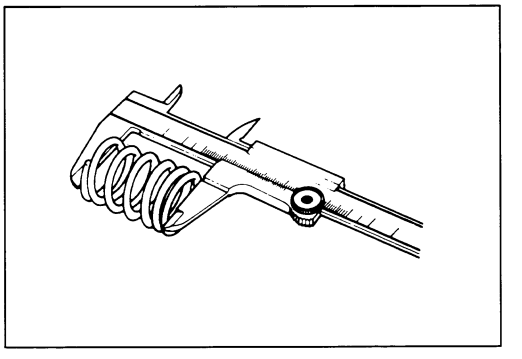

### CLUTCH RELEASE BEARING

Inspect the clutch release bearing for any abnormality, especially cracks When removing the bearing from the clutch, decide whether it can be reused or if it should be replaced.
Smooth engagement and disengagement of the clutch depends on the condition of this bearing.

*NOTE:*
*The thrust washer is located between the clutch pressure plate and the clutch release bearing.*

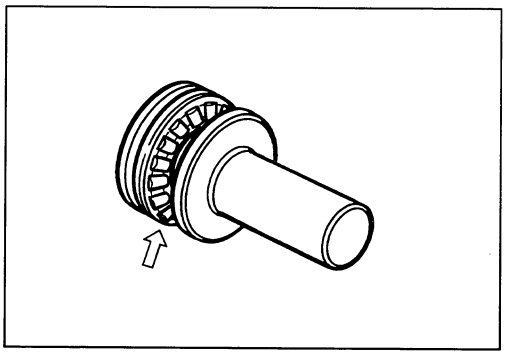

### CLUTCH PUSH ROD

Visually inspect the clutch push rods for damage and bend.

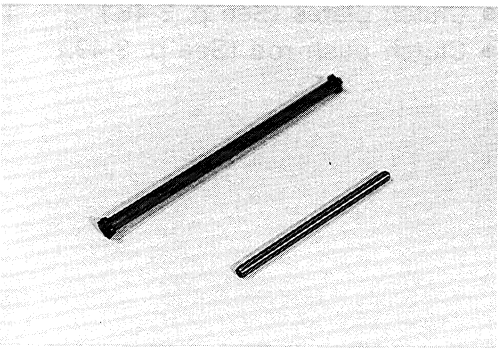

### CLUTCH RELEASE CYLINDER INSPECTION

See p. 6-63.

## CLUTCH INSTALLATION

Installation is in the reverse order of removal.

*NOTE:*
*Refer to the following pages for the details of each step.*

**Install:**
- Spacer
- Thrust washer (See p. 3-45.)
- Spacer
- Needle roller bearing (See p. 3-46.)

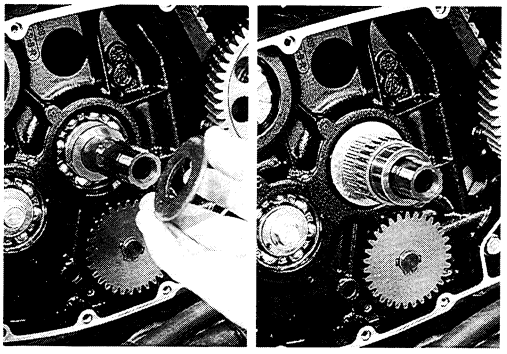

- Primary driven gear assembly
- Thrust washer (See p. 3-46.)

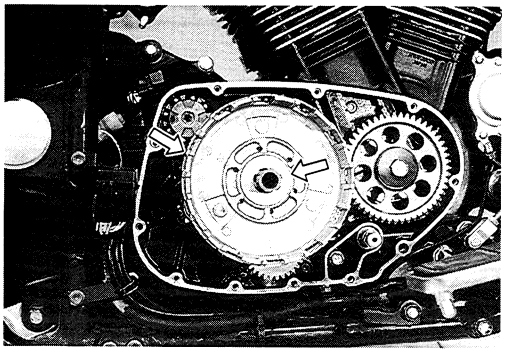

- Clutch driven cam
- Clutch drive cam
- Clutch sleeve hub (See pp. 3-46 and -47.)

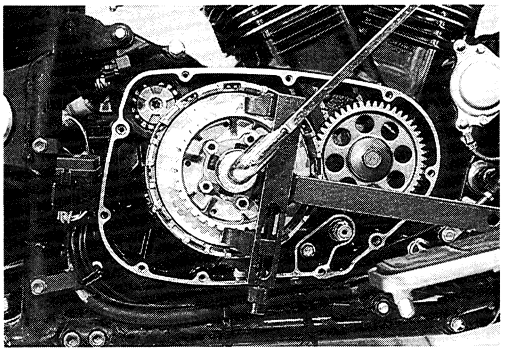

- Clutch plates (See p. 3-48.)
- Clutch push rod (See p. 3-49.)

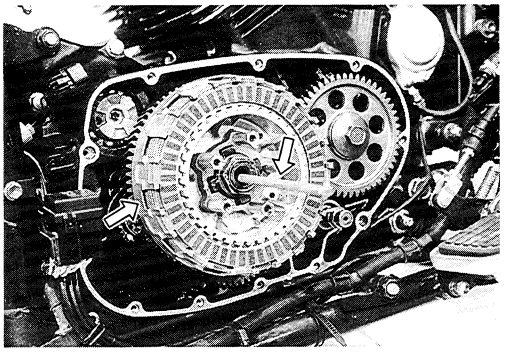

- Clutch push piece
- Bearing
- Washer (See p. 3-49.)

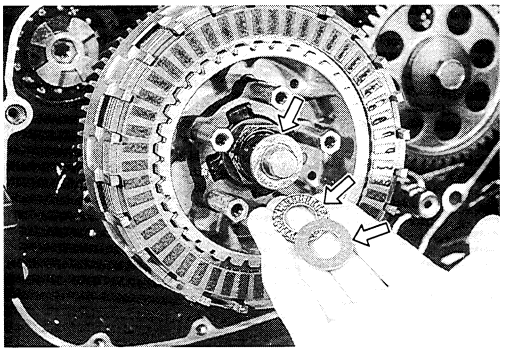

- Pressure plate
- Clutch spring (See p. 3-49.)

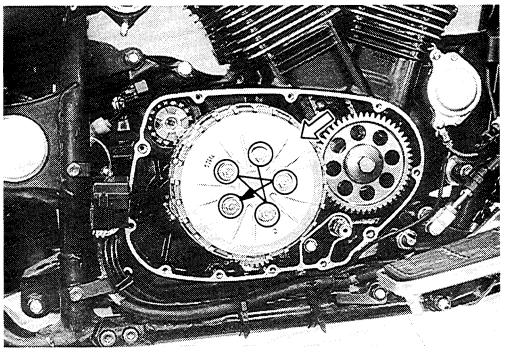

- Dowel pins
- Gasket
- Clutch cover (See pp. 3-49 and -50.)

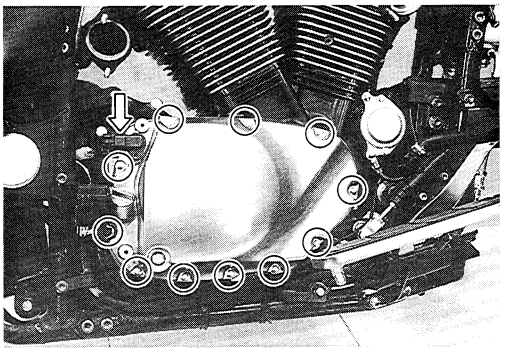

- Rear clutch cover ①.
- Exhaust pipe and muffler. (See p. 3-15.)
- Engine side box.

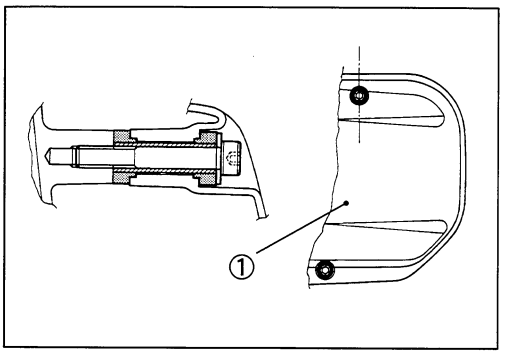


Adjust the following item to the specification.

| | Page |
|---|---|
| * Engine oil | 2-6. |

## CLUTCH RELEASE CYLINDER REASSEMBLY AND INSTALLATION

See pp. 6-63 and -64.

23 N·m (2.3 kg-m) (16.5 lb-ft)

11 N·m (1.1 kg-m) (8.0 lb-ft)

10 N·m (1.0 kg-m) (7.0 lb-ft)

95 N·m (9.5 kg-m) (68.5 lb-ft)

60 N·m (6.0 kg-m) (43.5 lb-ft)

# STARTER SYSTEM/GENERATOR/SIGNAL GENERATOR

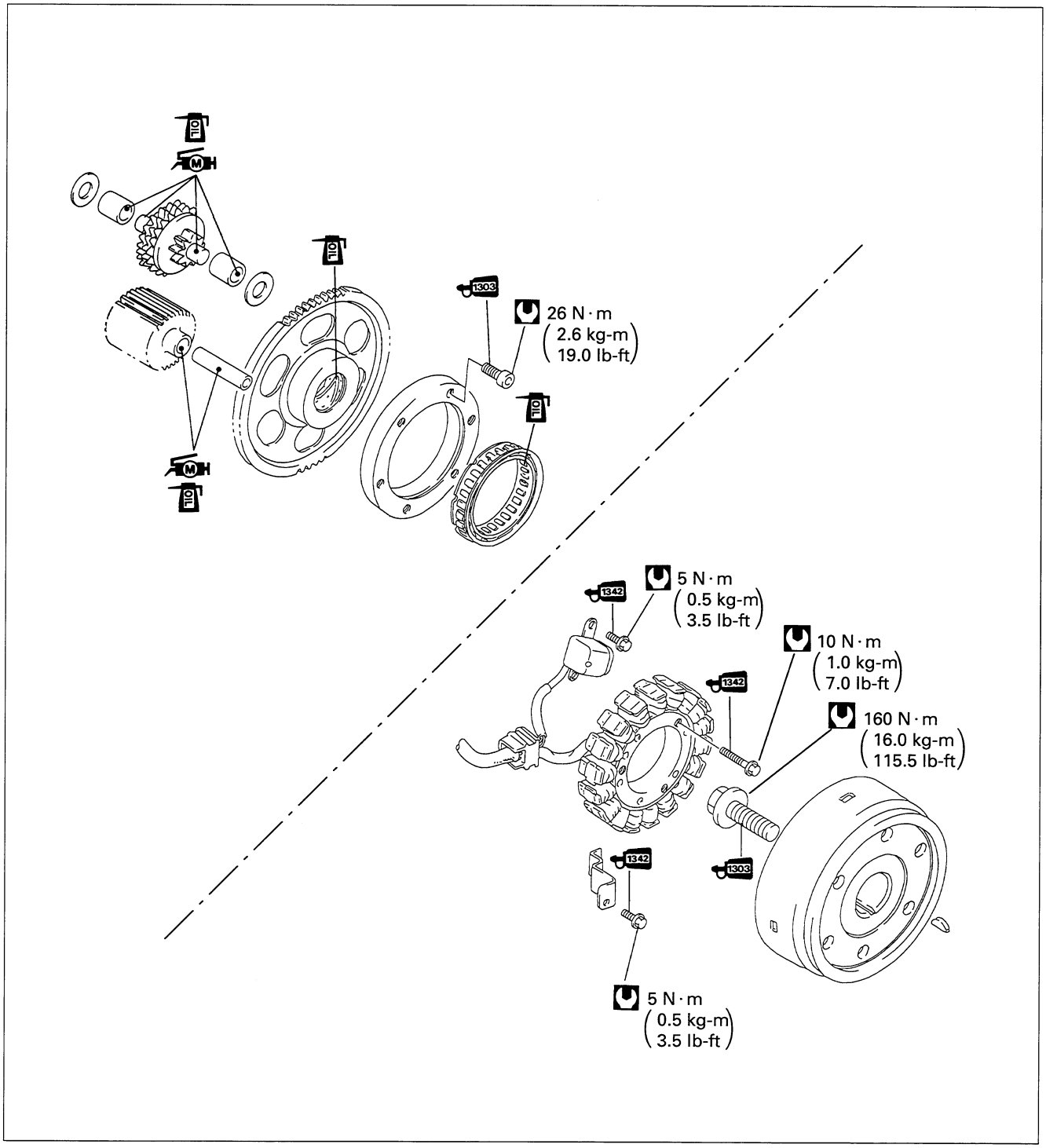


3D

## CONTENTS

*STARTER TORQUE LIMITER/GENERATOR/SIGNAL GENERATOR REMOVAL .. 3D-1*
*STARTER TORQUE LIMITER/GENERATOR/SIGNAL GENERATOR INSPECTION AND SERVICE ..... 3D-3*
*STARTER TORQUE LIMITER/GENERATOR/SIGNAL GENERATOR INSTALLATION ..... 3D-6*
*STARTER MOTOR REMOVAL ..... 3D-8*
*STARTER MOTOR INSPECTION AND SERVICING ..... 3D-8*
*STARTER MOTOR INSTALLATION ..... 3D-8*

## STARTER TORQUE LIMITER/GENERATOR/ SIGNAL GENERATOR REMOVAL

After draining engine oil, the following component parts must be removed in the described order before removing the starter torque limiter, the generator and the signal generator.

*NOTE:*
*Refer to the following pages for the details of each step.*

**Drain:**
- Engine oil (See p. 2-6.)

**Remove:**
- Secondary gear case cover. (See p. 3-7.)

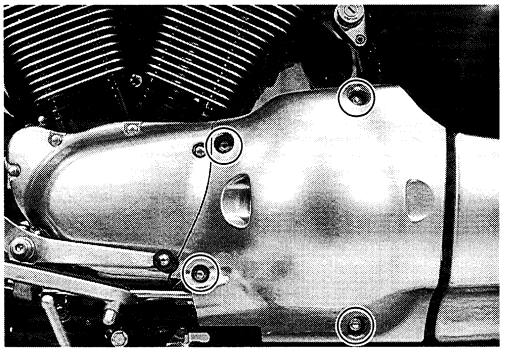

- Front footrest (See p. 3-10.)

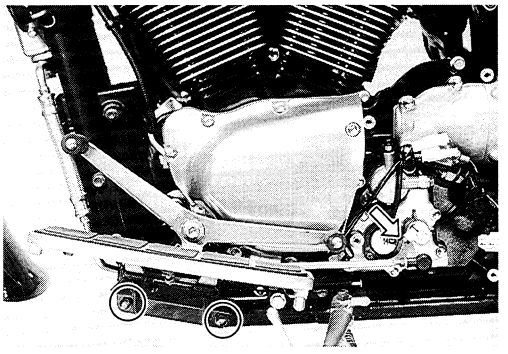

- Generator cover (See p. 3-16.)

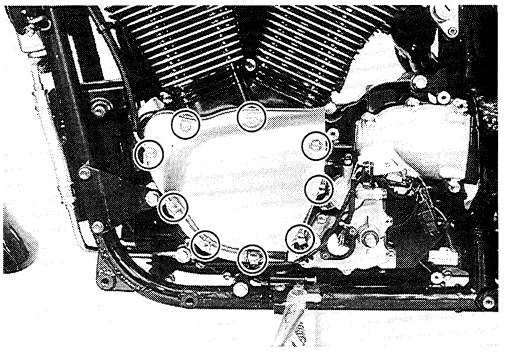

- Dowel pin
- Gasket (See p. 3-16.)

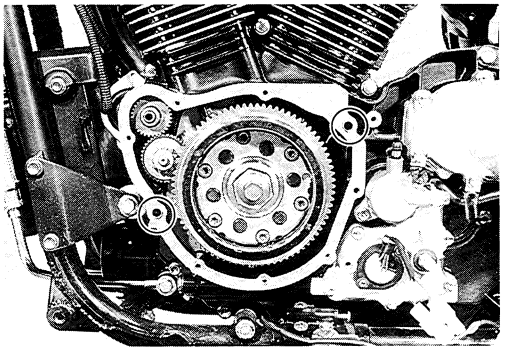

- Starter idle gear
- Shaft
- Washer
- Bush (See p. 3-17.)

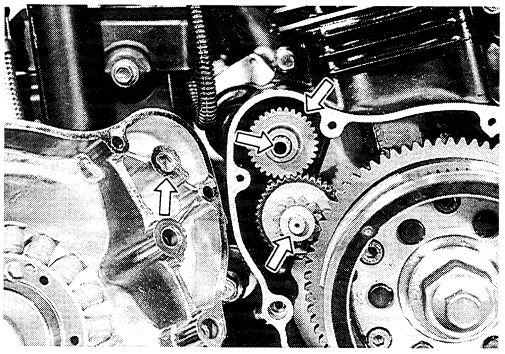

- Generator rotor assembly (See p. 3-27.)

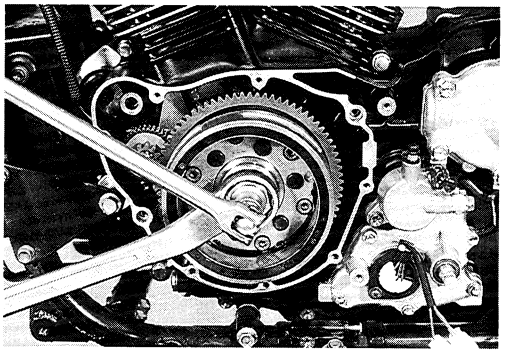

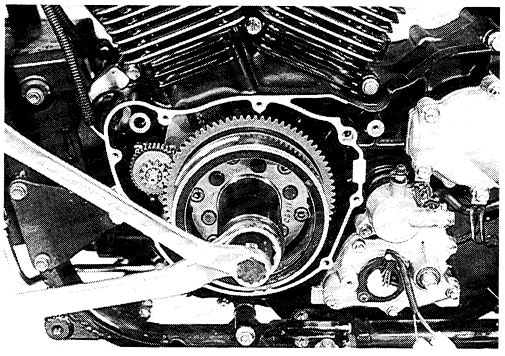

- Key
- Starter driven gear (See p. 3-27.)

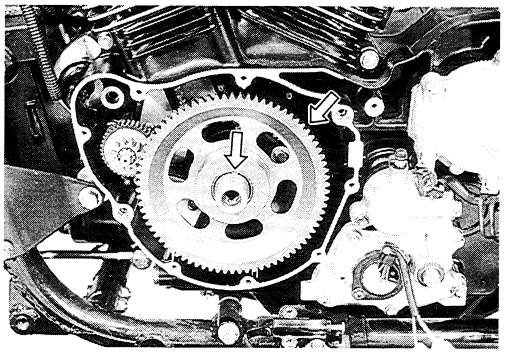

- Starter torque limiter
- Washer
- Bush (See p. 3-27.)

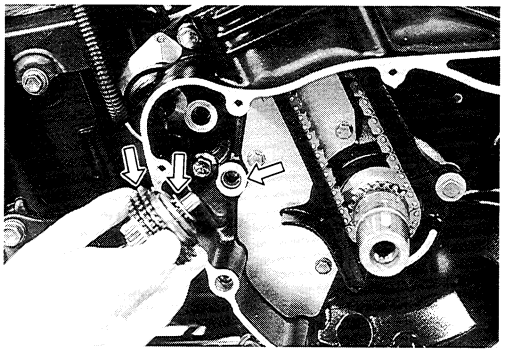

# STARTER TORQUE LIMITER/GENERATOR/ SIGNAL GENERATOR INSPECTION AND SERVICE

## STARTER TORQUE LIMITER INSPECTION

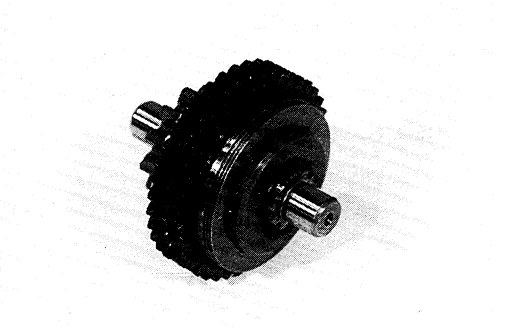

**⚠ CAUTION**

**Do not attempt to disassemble the starter torque limiter.**
**The starter torque limiter is available only as an assembly.**

- Check the slip torque with the special tools.

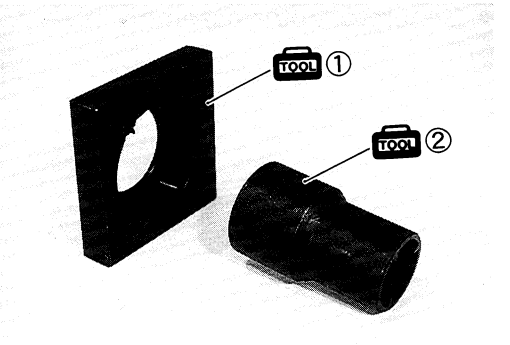


**TOOL 09930-73130: Starter torque limiter holder ①**
**09930-73140: Starter torque limiter socket ②**

- Set the starter torque limiter to the special tools and vise as shown in the illustration.
- If the slip torque is not within the specification, replace the starter torque limiter with a new one.

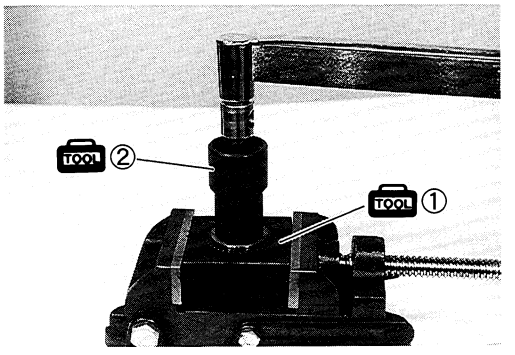


**Standard**
**Slip torque: 20–40 N·m (2.0–4.0 kg-m, 14.5–29.0 lb-ft)**

## STARTER TORQUE LIMITER SHAFT BUSH INSPECTION

- Inspect the inside surfaces of the bushes for wear or damage. If there is anything unusual, replace the bushes with new ones.

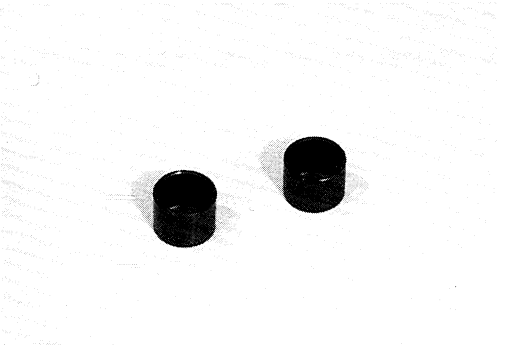

## GENERATOR INSPECTION

See pp. 7-8 and -9.

## SIGNAL GENERATOR INSPECTION

See pp. 7-26 and -27.

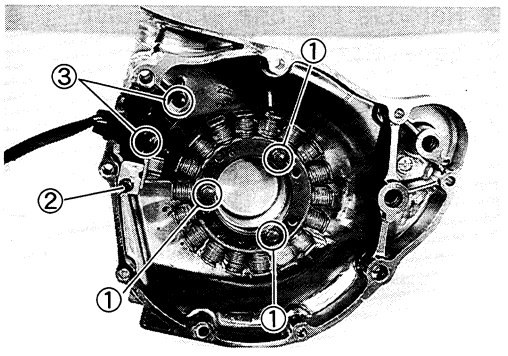


## GENERATOR STATOR AND SIGNAL GENERATOR SERVICING

When replacing the generator stator or signal generator, apply THREAD LOCK "1342" to the generator stator set bolts ①, clamp bolt ② and signal generator set bolt ③ and tighten them to the specified torque.

**1342 99000-32050: THREAD LOCK "1342"**

**Generator stator set bolt ①: 10 N·m (1.0 kg-m, 7.0 lb-ft)**
**Generator lead wire clamp bolt ②: 5 N·m (0.5 kg-m, 3.5 lb-ft)**
**Signal generator set bolt ③: 5 N·m (0.5 kg-m, 3.5 lb-ft)**

## STARTER CLUTCH INSPECTION

Install the starter driven gear onto the starter clutch and turn the starter driven gear by hand to inspect the starter clutch for a smooth movement. The gear turns one direction only. If a large resistance is felt to rotation, inspect the starter clutch for damage or inspect the starter clutch contacting surface of the starter driven gear for wear or damage. If they are found to be damaged, replace them with new ones.

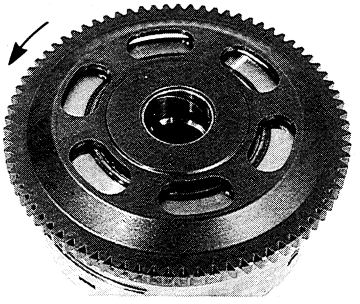

## STARTER DRIVEN GEAR BEARING INSPECTION

Inspect the starter driven gear bearing for wear of any damages.

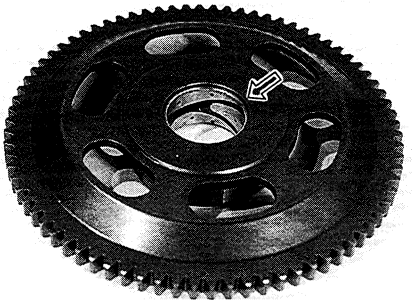

## STARTER CLUTCH SERVICING

- Remove the starter clutch securing bolts.

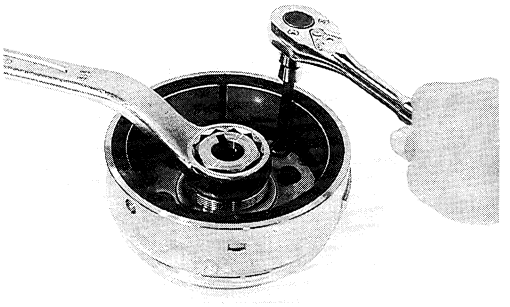

- Remove the one way clutch ① and guide ② from the generator rotor ③.

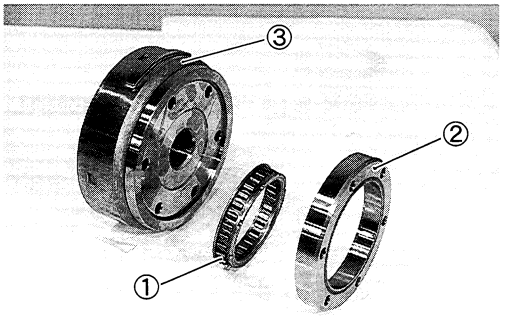


- When fitting the one way clutch ① to the guide ②, position flange side Ⓐ of one way clutch to the generator side.

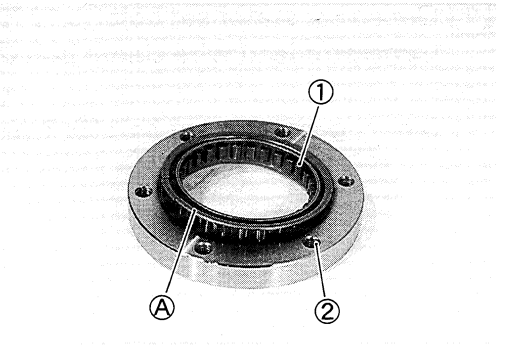


- When installing the starter clutch guide ②, make sure that the chamfer Ⓑ side faces out.

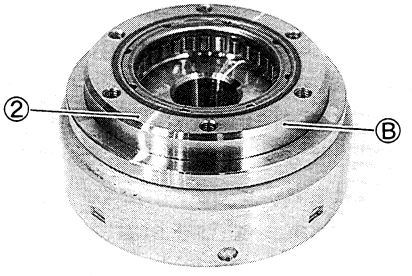


- Apply THREAD LOCK SUPER "1303" to the starter clutch bolts and tighten them to the specified torque.

**1303 99000-32030: THREAD LOCK SUPER "1303"**

**Starter clutch allen bolt: 26 N·m (2.6 kg-m, 19.0 lb-ft)**

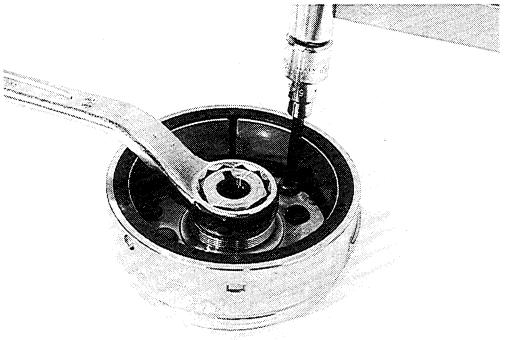

# STARTER TORQUE LIMITER/GENERATOR/ SIGNAL GENERATOR INSTALLATION

Installation is in the reverse order of removal.

*NOTE:*
*Refer to the following pages for the details of each step.*

**Install:**
- Bush
- Washer
- Starter torque limiter (See p. 3-36.)

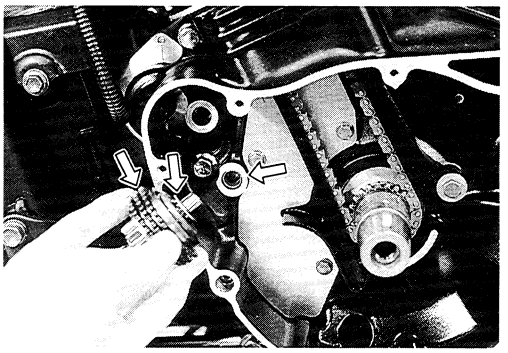

- Key
- Starter driven gear (See p. 3-37.)

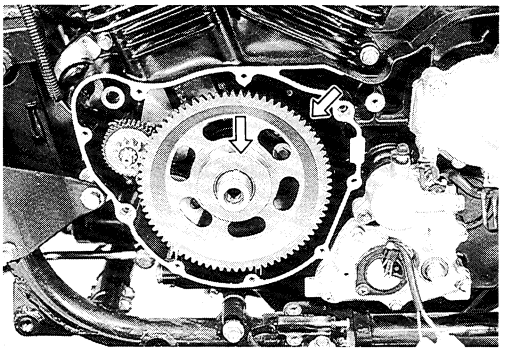

- Generator rotor assembly (See p. 3-37 and -38.)

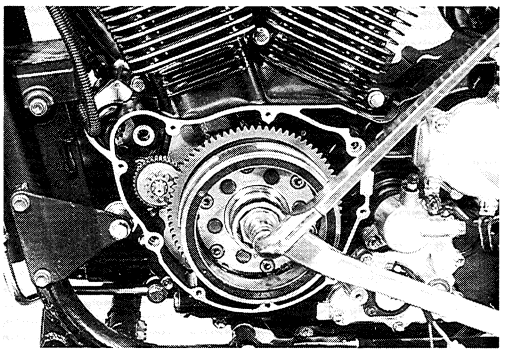

- Starter idle gear
- Shaft
- Bush
- Washer (See p. 3-60.)

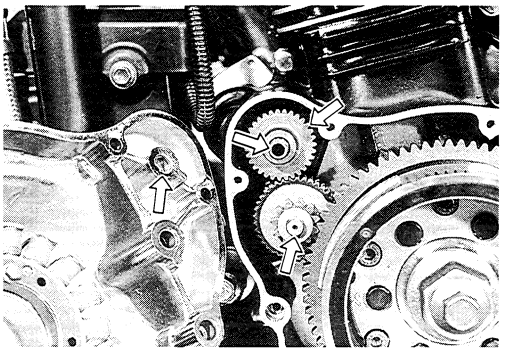

- Gasket
- Dowel pin (See p. 3-60.)

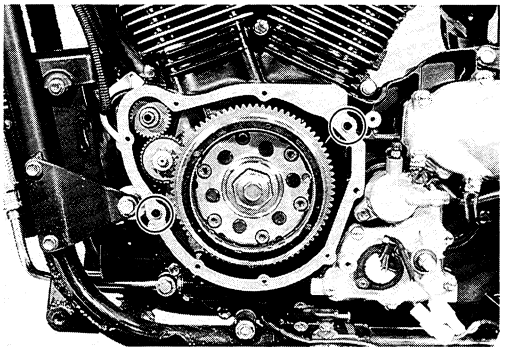

- Generator cover (See p. 3-60.)

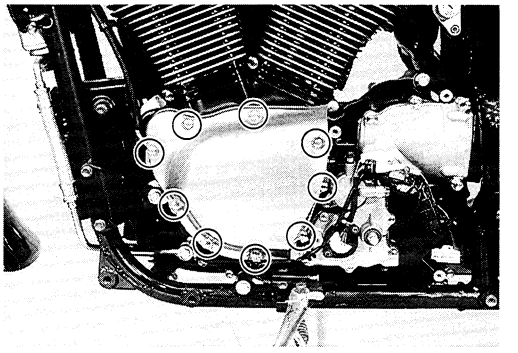

- Front footrest (See p. 3-13.)

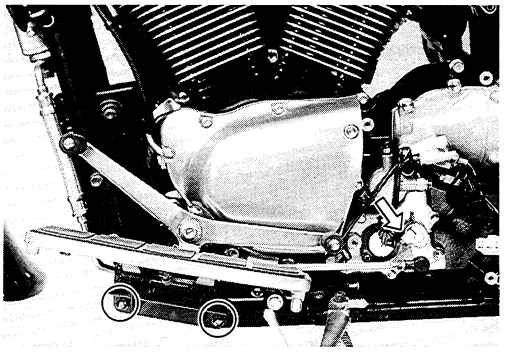

- Secondary gear case cover.

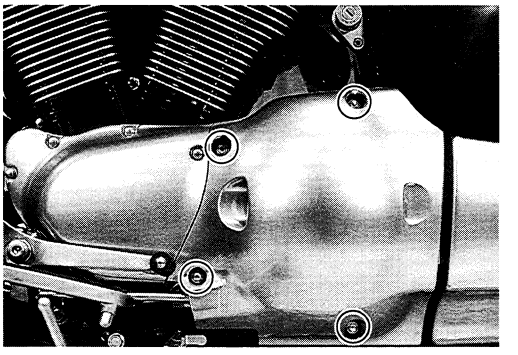

Adjust the following item to the specification.

| | Page |
|---|---|
| * Engine oil | 2-6 |

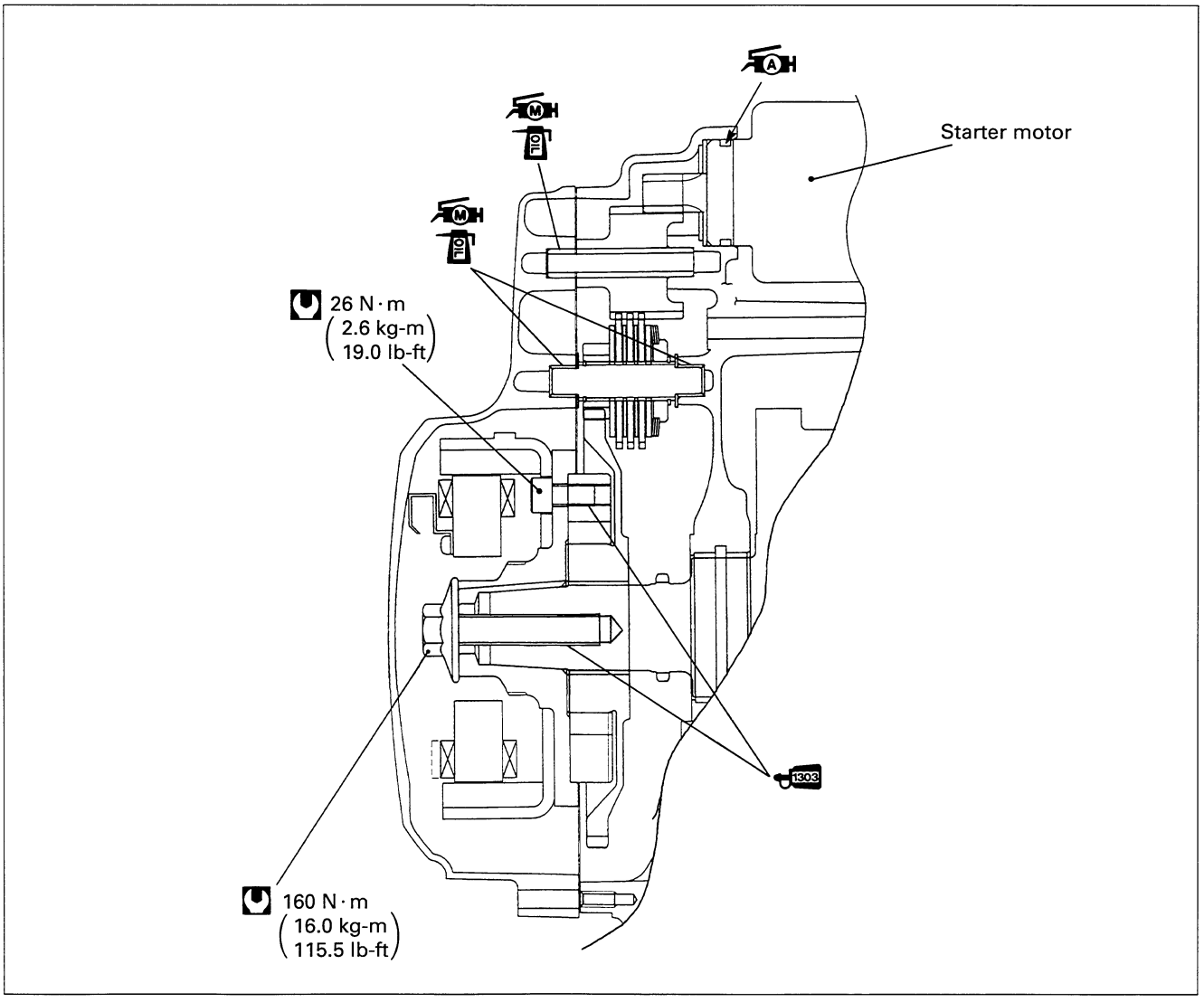


## STARTER MOTOR REMOVAL AND DISASSEMBLY

See p. 7-14.

## STARTER MOTOR INSPECTION

See p. 7-15.

## STARTER MOTOR REASSEMBLY INSTALLATION

See p. 7-16 and 7-17.

# GEARSHIFT LINKAGE

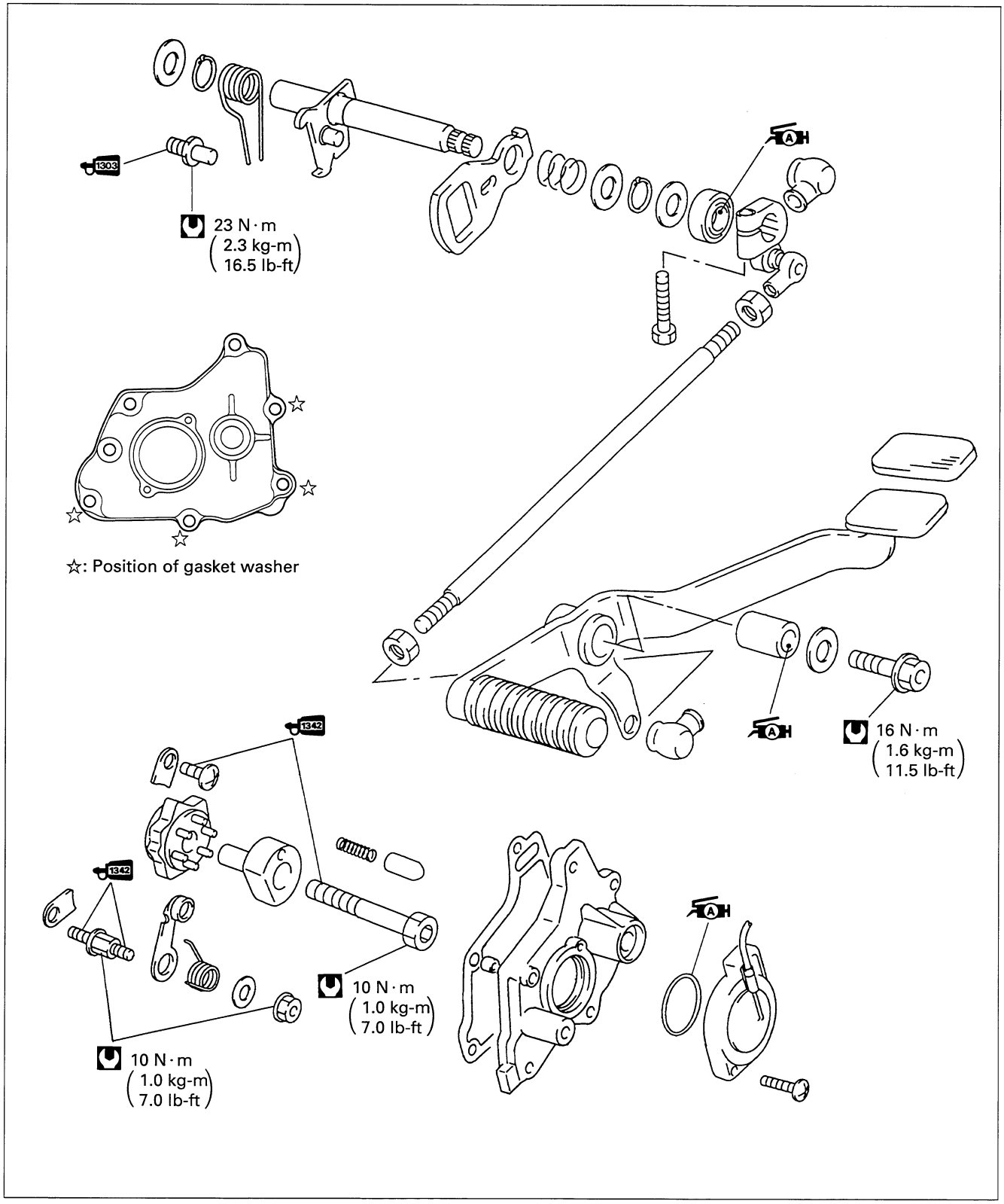


3E

CONTENTS

GEARSHIFT LINKAGE REMOVAL ..... 3E-1
GEARSHIFT LINKAGE INSPECTION AND SERVICE ..... 3E-3
GEARSHIFT LINKAGE INSTALLATION ..... 3E-5

## GEARSHIFT LINKAGE REMOVAL

After draining engine oil, the following components must be removed in the described order before removing the gearshift linkage.

*NOTE:*
*Refer to the following pages for the details of each step.*

**Drain:**
- Engine oil (See p. 2-6.)

**Remove:**
- Secondary gear case cover (See p. 3-7.)

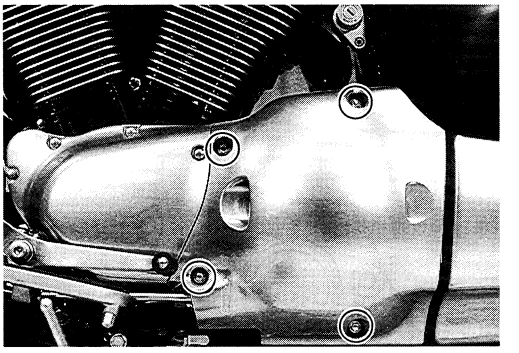

- Gearshift lever (See p. 3-7.)
- Clutch release cylinder (See p. 3-8.)
- Neutral indicator switch lead wire

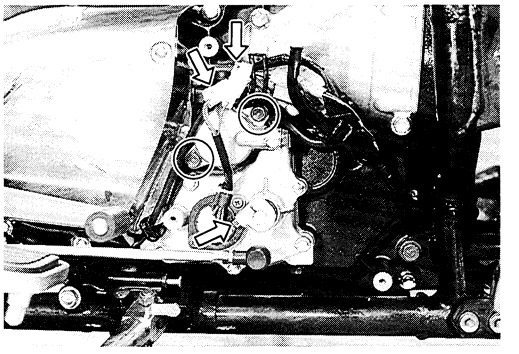

- Gearshift cover (See p. 3-25.)

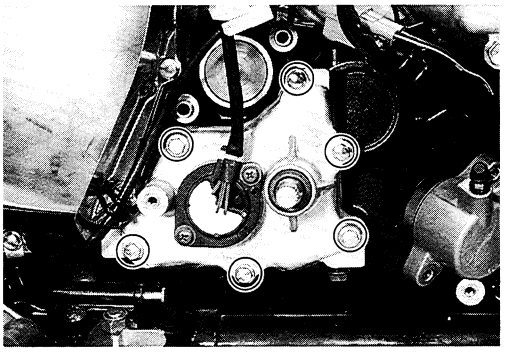

- Dowel pins
- Gasket (See p. 3-26.)

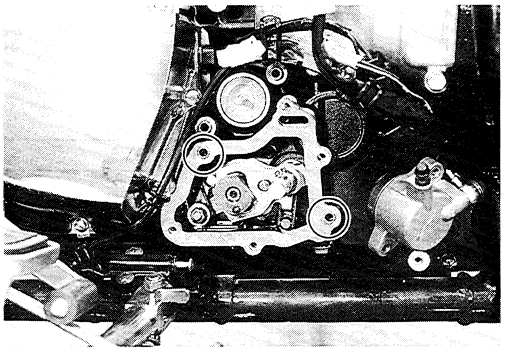

- Switch contact
- Spring (See p. 3-25.)
- Oil jet (See p. 3-26.)

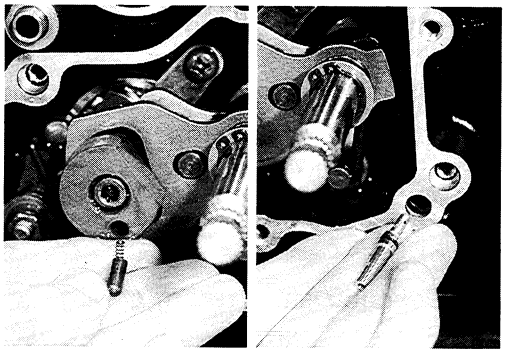

- Gearshift cam retainer (See p. 3-26.)

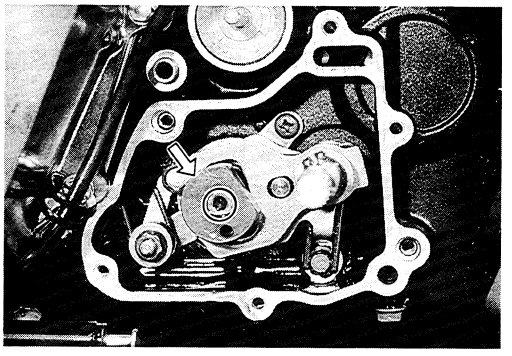

- Gearshift shaft/gearshift arm (See p. 3-26.)

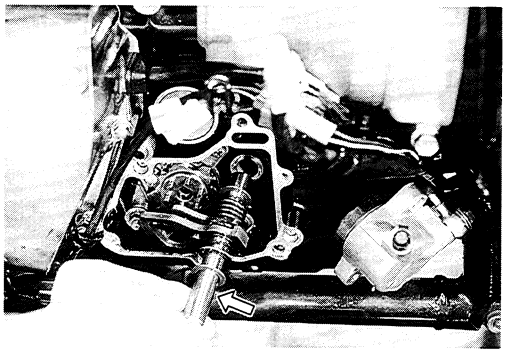

- Gearshift cam plate
- Gearshift cam stopper nut
- Gearshift arm stopper spring (See p. 3-26.)

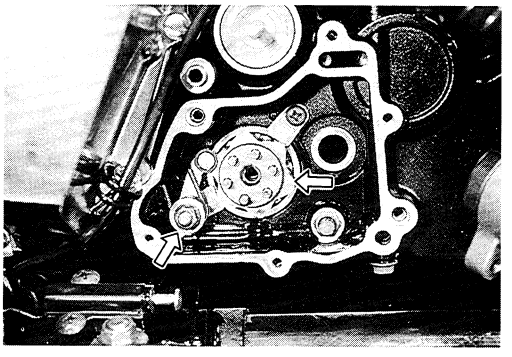

- Gearshift cam stopper bolt
- Gearshift cam stopper
- Bearing retainer
- Gearshift arm stopper bolt (See p. 3-26.)

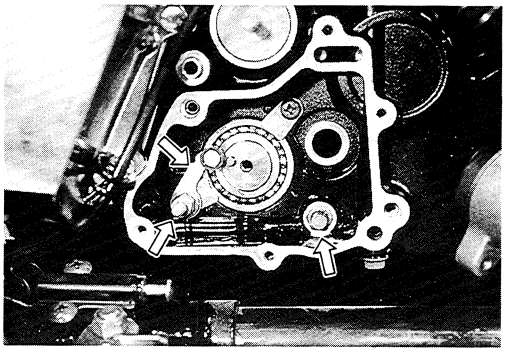

# GEARSHIFT LINKAGE INSPECTION AND SERVICE

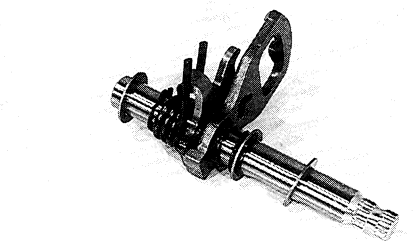

## GEARSHIFT SHAFT/GEARSHIFT ARM DISASSEMBLY

- Remove the following parts from the gearshift shaft/gearshift arm ①.

②Washer
③Circlip
④Gearshift shaft return spring
⑤Gearshift cam drive plate
⑥Plate return spring
⑦Washer
⑧Circlip
⑨Washer

**TOOL 09900-06107: Snap ring pliers**

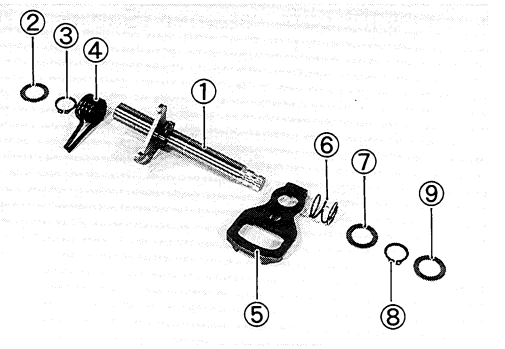


## GEARSHIFT SHAFT/GEARSHIFT ARM INSPECTION

Check the gearshift shaft/gearshift arm ① for wear or bend.

## RETURN SPRINGS INSPECTION

Check the return springs, ④ and ⑥, for damage or fatigue.

## GEARSHIFT SHAFT/GEARSHIFT ARM REASSEMBLY

- Install the following parts to the gearshift shaft/gearshift arm ① as shown in the right illustration.

②Washer
③Circlip
④Gearshift shaft return spring
⑤Gearshift cam drive plate
⑥Plate return spring
⑦Washer
⑧Circlip
⑨Washer

**TOOL 09900-06107: Snap ring pliers**

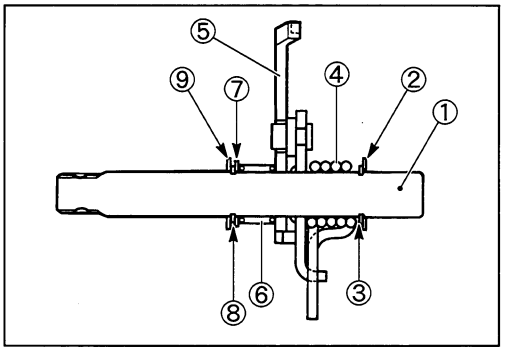


*NOTE:*
*When installing the gearshift shaft return spring ④, position the stopper Ⓐ of the gearshift arm between the shaft return spring ends Ⓑ.*

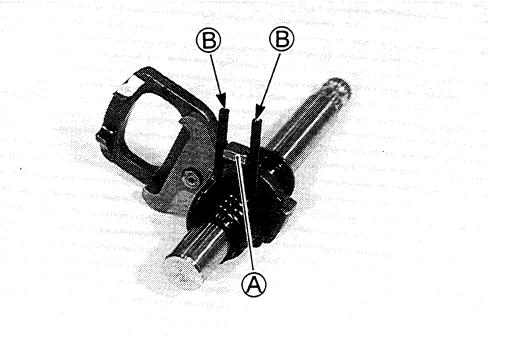

### OIL SEAL INSPECTION

Inspect the gearshift shaft oil seal for damage or wear on the lip.
If any defects are found, replace the oil seal with a new one.

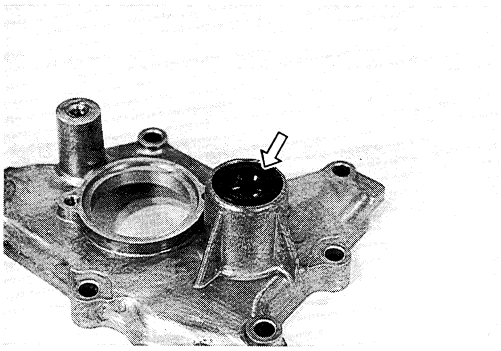

### OIL SEAL REPLACEMENT

- Remove the gearshift shaft oil seal from the gearshift cover.
- Install the new oil seal.

**⚠ CAUTION**

**The removed oil seal must be replaced with a new one.**

*NOTE:*
*Apply grease to the oil seal lip to prevent oil seal damage when installing the gearshift cover.*

**99000-25010: SUZUKI SUPER GREASE "A"**

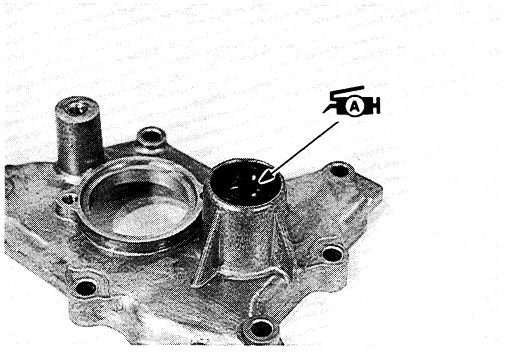

### GEARSHIFT SHAFT HOLE INSPECTION

Check the gearshift shaft holes for damage or wear.

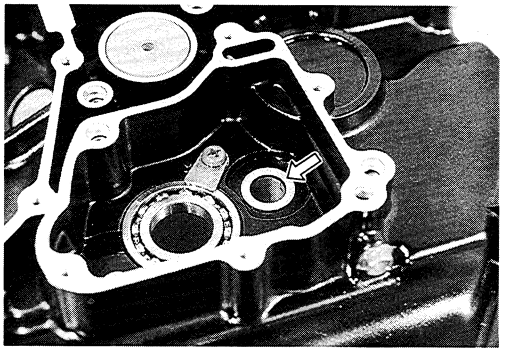

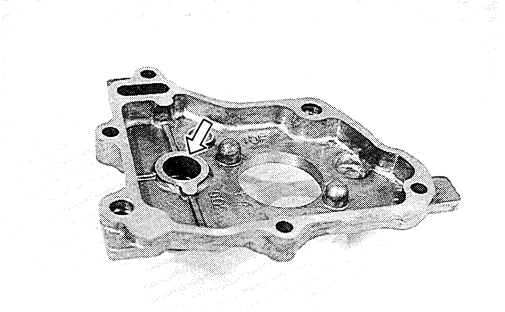

## GEARSHIFT LINKAGE INSTALLATION

Installation is in the reverse order of removal.

*NOTE:*
*Refer to the following pages for the details of each steps.*

**Install:**
- Gearshift arm stopper bolt
- Gearshift cam stopper
- Gearshift arm stopper bolt (See p. 3-38.)

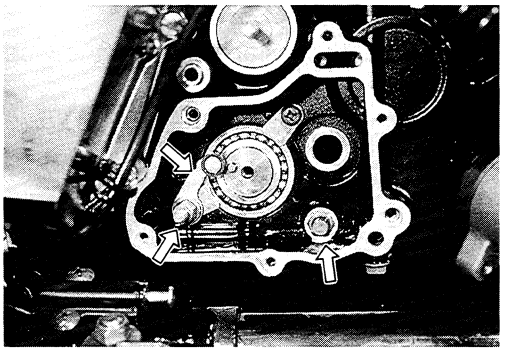

- Gearshift cam stopper spring
- Gearshift cam stopper nut
- Gearshift cam plate (See pp. 3-38 and 3-39.)

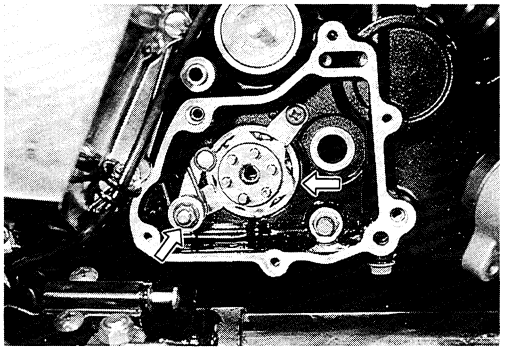

- Washer
- Gearshift shaft/gearshift arm (See p. 3-39.)

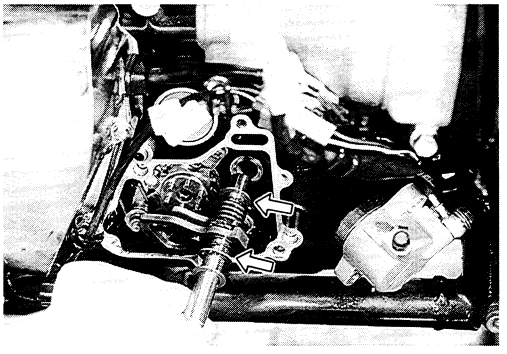

- Gearshift cam retainer (See p. 3-39.)

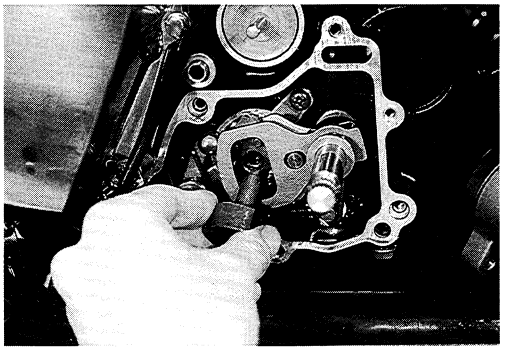

- Oil jet (See p. 3-39.)

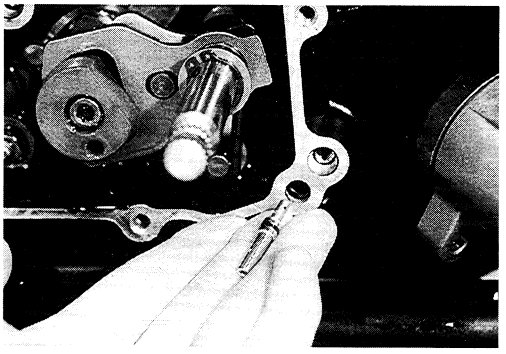

- Switch contact.
- Spring (See p. 3-40.)

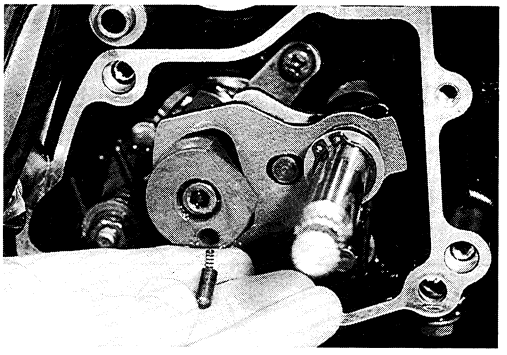

- Dowel pins
- Gasket (See p. 3-39.)

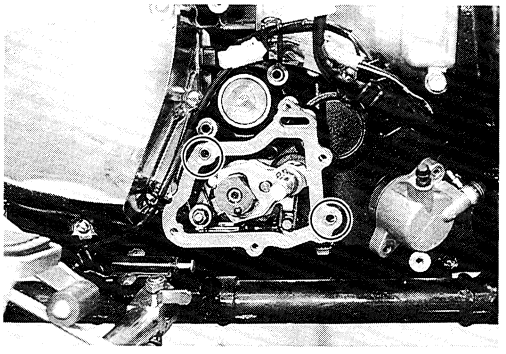

- Gearshift cover (See p. 3-40.)

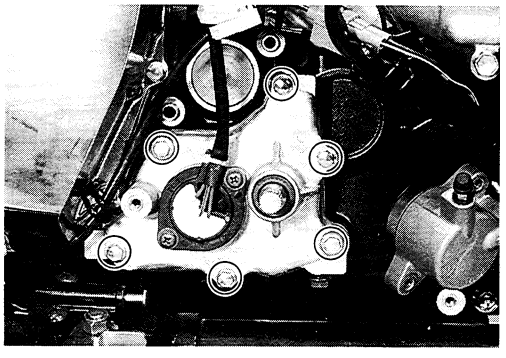

- Neutral indicator switch lead wire (See p. 3-40.)
- Clutch release cylinder (See p. 3-14.)
- Gearshift lever (See p. 3-14.)

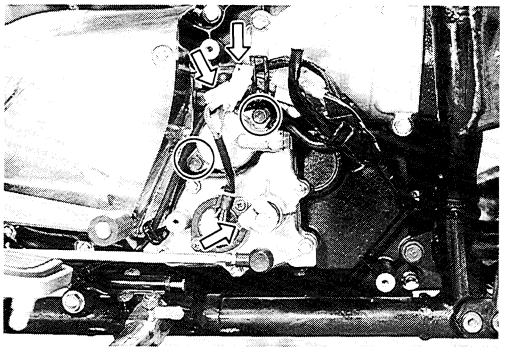

- Secondary gear case cover.

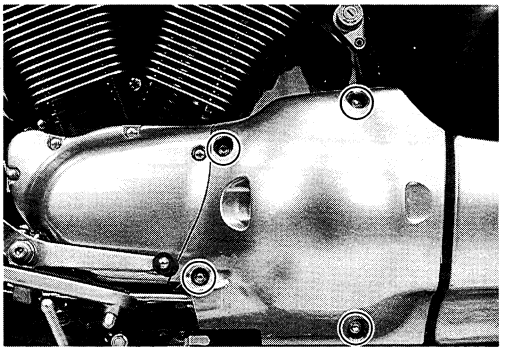

Adjust the following items to the specification.


| | Page |
|---|---|
| * Engine oil | 2- 6 |
| * Clutch | 2-11 |


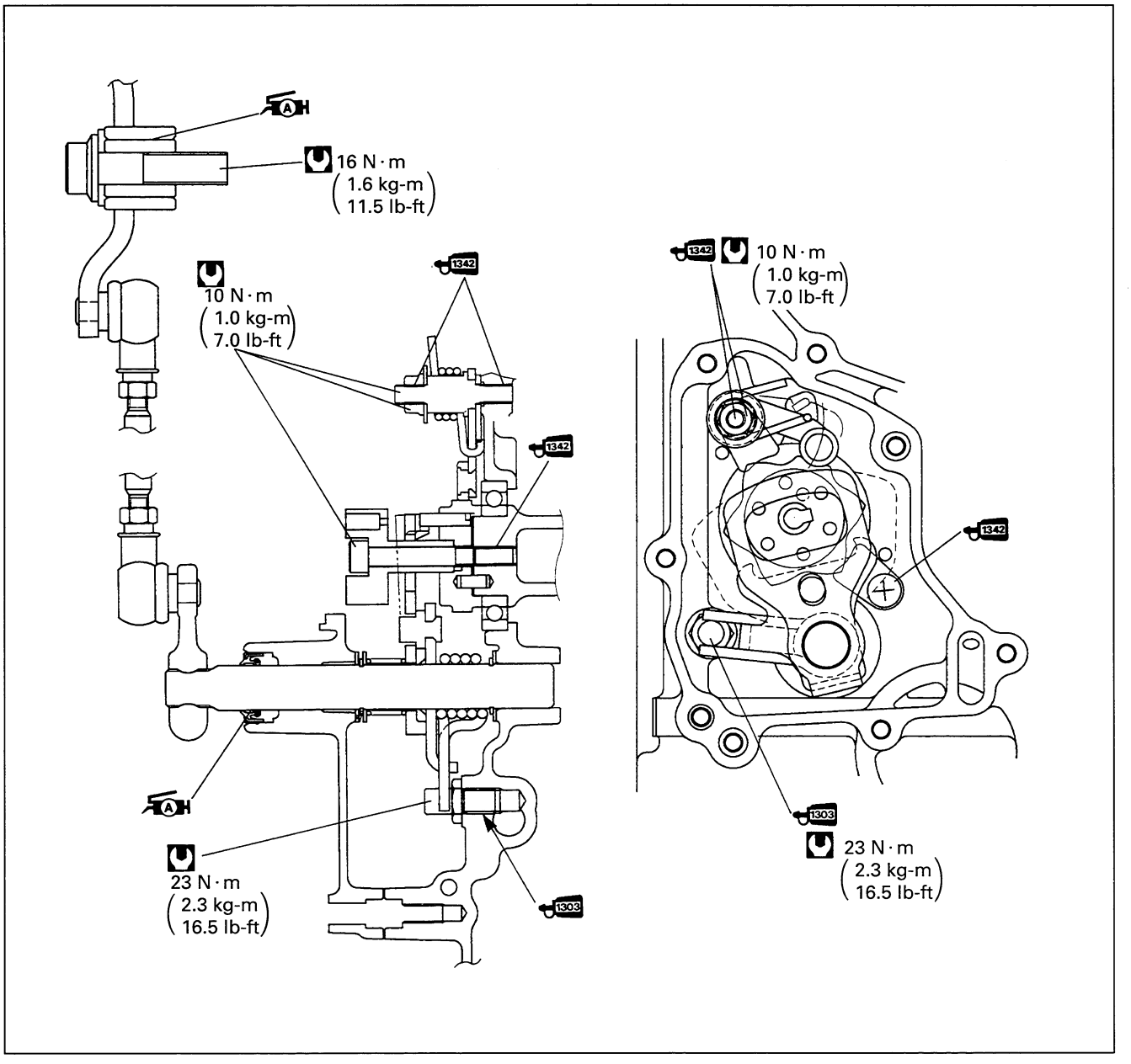

# CRANKCASE/TRANSMISSION/CRANKSHAFT/CONROD

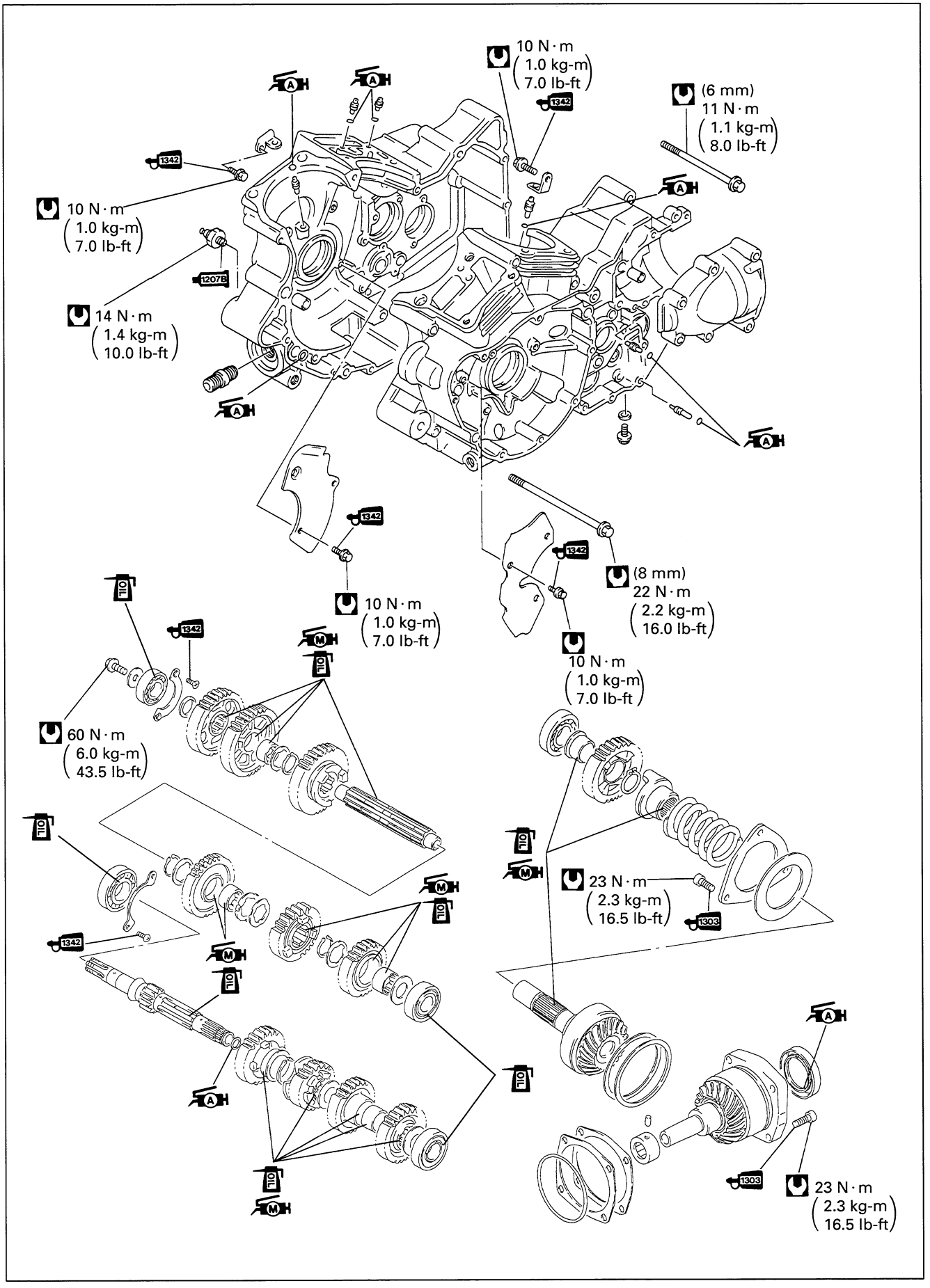

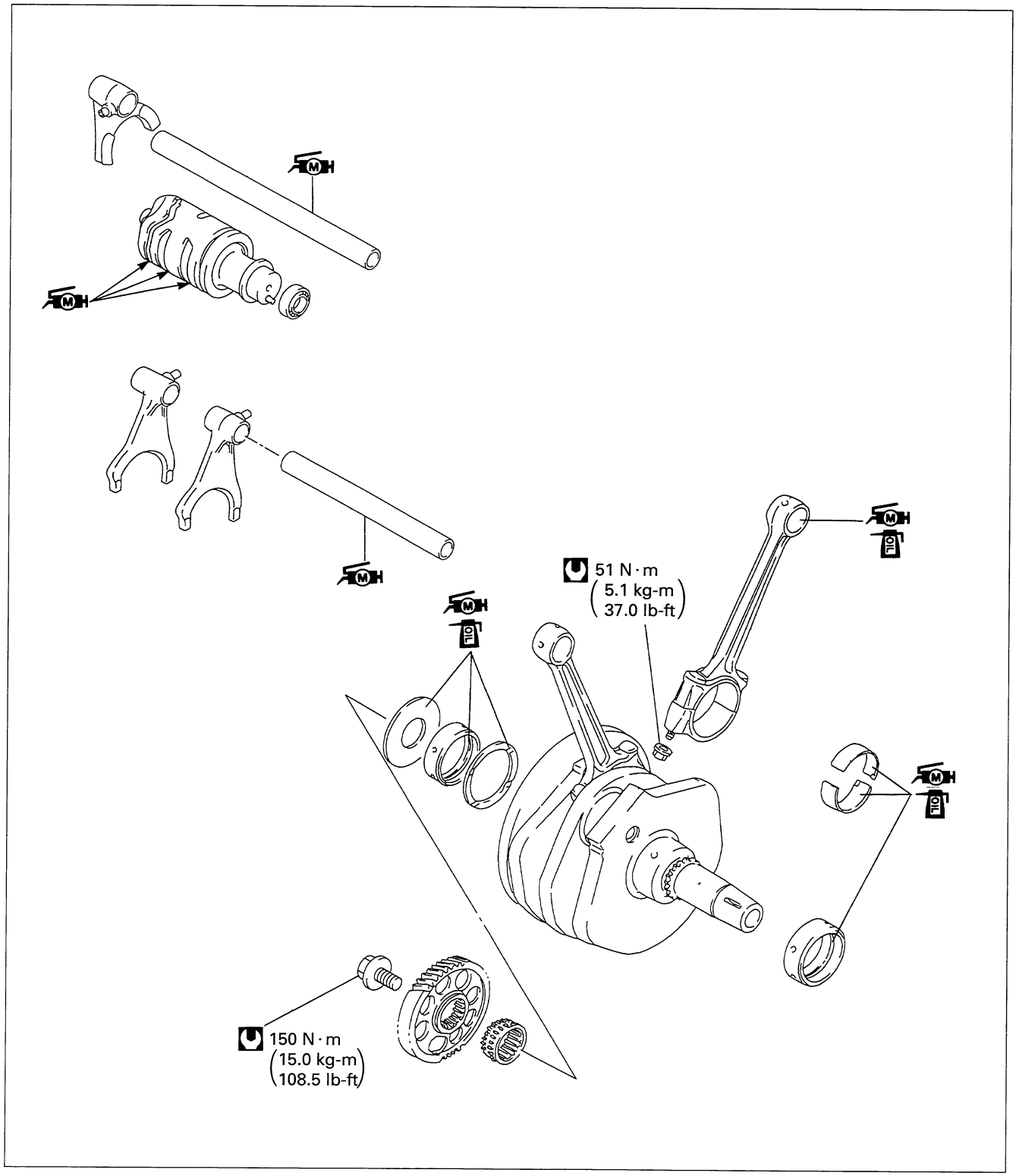




## CONTENTS


TRANSMISSION / CRANKSHAFT/CONROD REMOVAL ..... 3F- 1
TRANSMISSION INSPECTION AND SERVICE ..... 3F- 1
CONROD / CRANKSHAFT INSPECTION ..... 3F- 8
CONROD-CRANK PIN BEARING INSPECTION AND SERVICE ..... 3F- 8
CRANKCASE-CRANKSHAFT BEARING INSPECTION AND SERVICE ..... 3F-11
CRANKSHAFT THRUST CLEARANCE ADJUSTMENT ..... 3F-12
TRANSMISSION/CRANKSHAFT/CONROD INSTALLATION ..... 3F-13

## TRANSMISSION/CRANKSHAFT/CONROD REMOVAL

The crankcase must be separated to service the transmission, the crankshaft and the conrods. These engine components require engine removal and disassembly. Refer to the engine removal and the engine disassembly sections.

* **ENGINE REMOVAL ..... See pp. 3-2 to -10.**
* **ENGINE DISASSEMBLY ..... See pp. 3-16 to -30.**

## TRANSMISSION INSPECTION AND SERVICE

**⚠ CAUTION**

**Identify the position of each removed part. Organize the parts in their respective groups (i.e., drive or driven) so that they can be reinstalled in their original positions.**

### GEARSHIFT FORK TO GROOVE CLEARANCE

Measure the gearshift fork clearance in the groove of its respective gear using the thickness gauge.
If the clearance exceeds the specification, replace the fork, its respective gear or both.
The clearance for each of the thee gearshift forks plays an important role in the smoothness and positiveness of the shifting action.

**TOOL 09900-20803: Thickness gauge**
**09900-20102: Vernier calipers**

**Standard**
**Gearshift fork to groove clearance: 0.10–0.30 mm (0.004–0.012 in)**

**Service Limit:**
**Gearshift fork to groove clearance: 0.5 mm (0.020 in)**

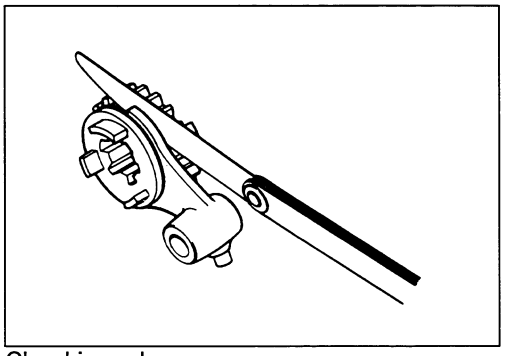
Checking clearance

**Standard**
**Gearshift fork groove width: 5.50–5.60 mm (0.217–0.220 in)**

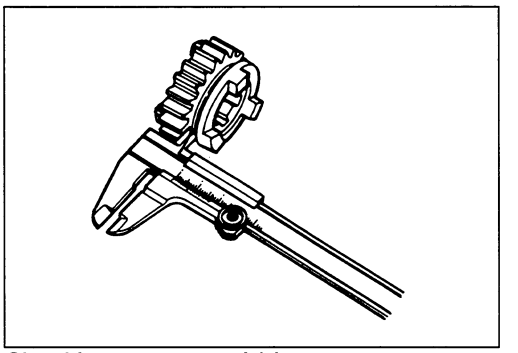
Checking groove width

**Standard**
**Gearshift fork thickness: 5.30–5.40 mm (0.209–0.213 in)**

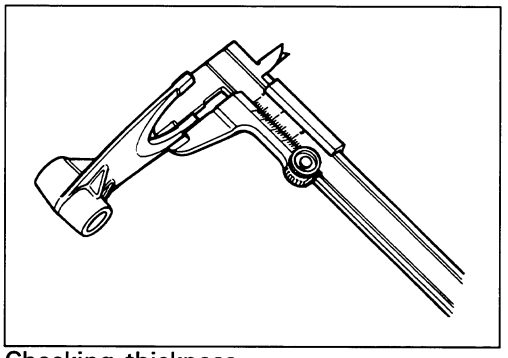
Checking thickness

## DISASSEMBLY

### Countershaft

- Remove the O-ring ①, washer ②, 5th (top) drive gear ③ and 4th drive gear ④.

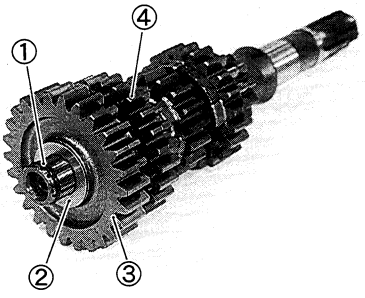


- Remove the 4th drive gear bushing ⑤, washer ⑥ and the 2nd drive gear ⑦.

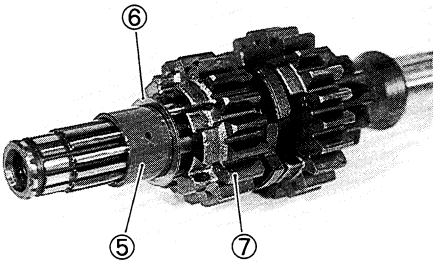


- Remove the 3rd drive gear circlip ⑧.

**TOOL 09900-06107: Snap ring pliers**

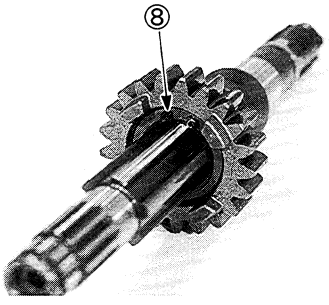


- Remove the 3rd drive gear ⑨ and its bushing ⑩.

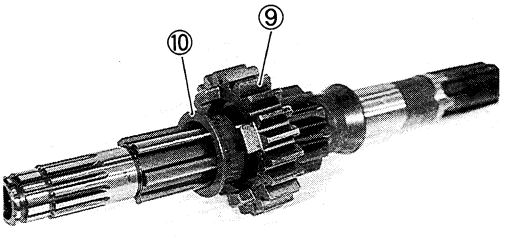

**Driveshaft**

- Remove the washer ① and 5th (top) driven gear ②.

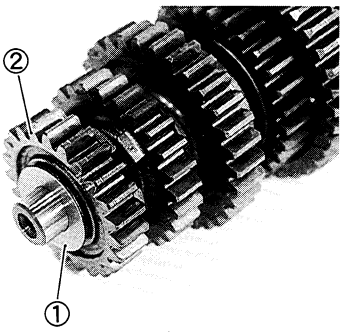


- Remove the 5th (top) driven gear bushing ③ and washer ④.
- Remove the 4th driven gear ⑤ by removing the circlip ⑥.

**TOOL 09900-06107: Snap ring pliers**

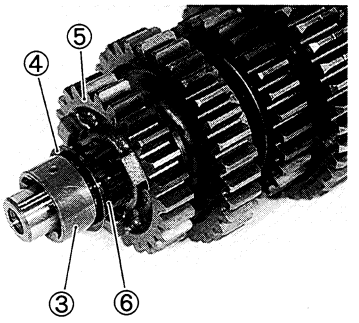


- Remove the over driving gear ⑦ and washer ⑧.

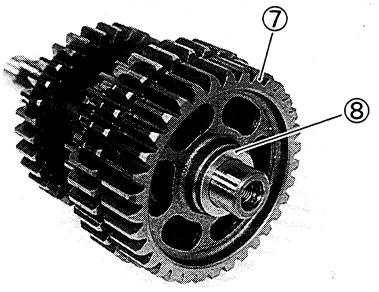


- Remove the 1st (low) driven gear ⑨.

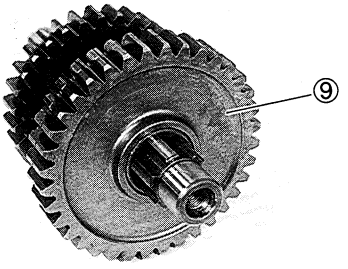


- Remove the 1st (low) driven gear bushing ⑩ and washer ⑪.
- Remove the 3rd driven gear ⑫ by removing the circlip ⑬.

**TOOL 09900-06107: Snap ring pliers**

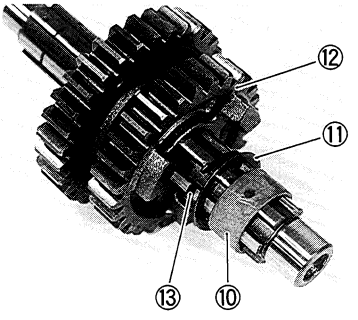

- Remove the 2nd driven gear ① and washer by removing the circlip.

**TOOL 09900-06107: Snap ring pliers**

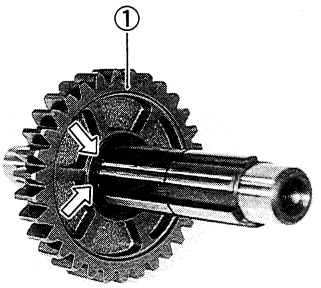


- Remove the 2nd driven gear bushing ②, lock washer No.1 ③ and No.2 ④.

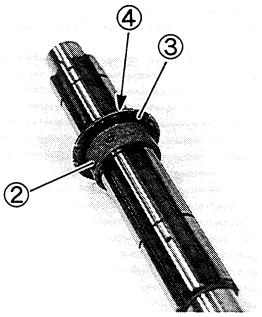


**REASSEMBLY**

Assemble the countershaft and driveshaft in the reverse order of disassembly. Pay attention to the following points:

*NOTE:*

** After installing the gears, rotate the gears by hand to inspect for abnormal noises and smooth rotation. Replace the gear or bushing if there is anything unusual.*

** Before installing the gears, lightly coat the driveshaft, countershaft and bushings with SUZUKI MOLY PASTE or engine oil.*

** Before installing the O-ring, apply grease to it.*

**M 99000-25140: SUZUKI MOLY PASTE**

**A 99000-25010: SUZUKI SUPER GREASE "A"**

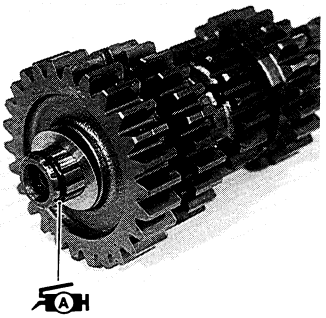


**⚠ CAUTION**

- **Never reuse a circlip. After a circlip has been removed from a shaft, it should be discarded and a new circlip must be installed.**
- **When installing a new circlip, do not expand the end gap larger than required to slip the circlip over the shaft.**
- **After installing a circlip, make sure that it is completely seated in its groove and securely fitted.**

*NOTE:*

*When reassembling the transmission, attention must be given to the locations and positions of washers and circlips. The cross sectional view shows the correct position of the gears, bushings, washers and circlips.*

*(See pp. 3F-6 and -7.)*

- When installing a new circlip, pay attention to the direction of the circlip. Fit the circlip to the side where the thrust is, as shown in the illustration. The rounded side should be against the gear surface.

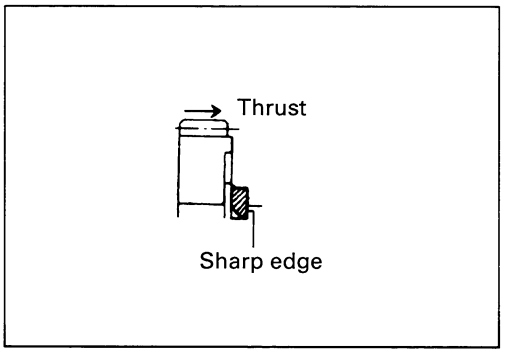


- Install the lock washer No.2 ① onto the driveshaft, and turn and fit it into the groove.
- Then, fit the lock washer No.1 ② in the lock washer No.2 ①.

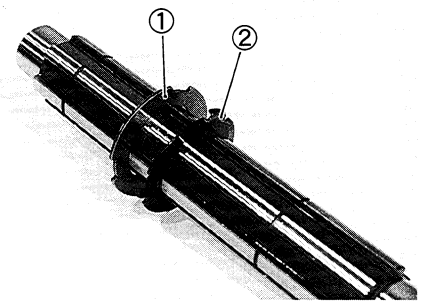


**▲ CAUTION**

**When installing the 2nd, 1st and 5th driven gear bushings onto the driveshaft, align the driveshaft oil hole Ⓐ with the bushing oil hole Ⓑ.**

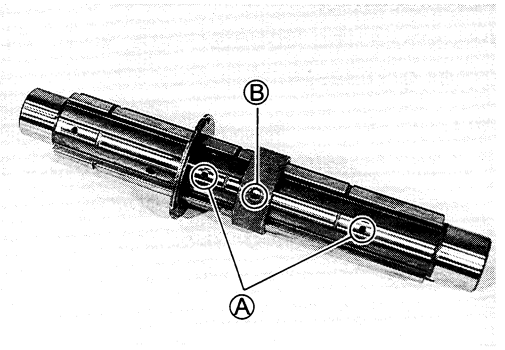


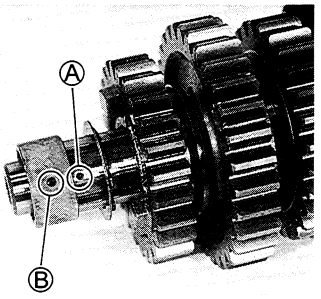


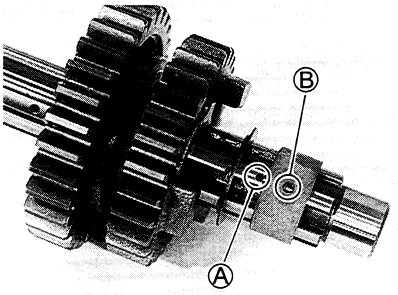

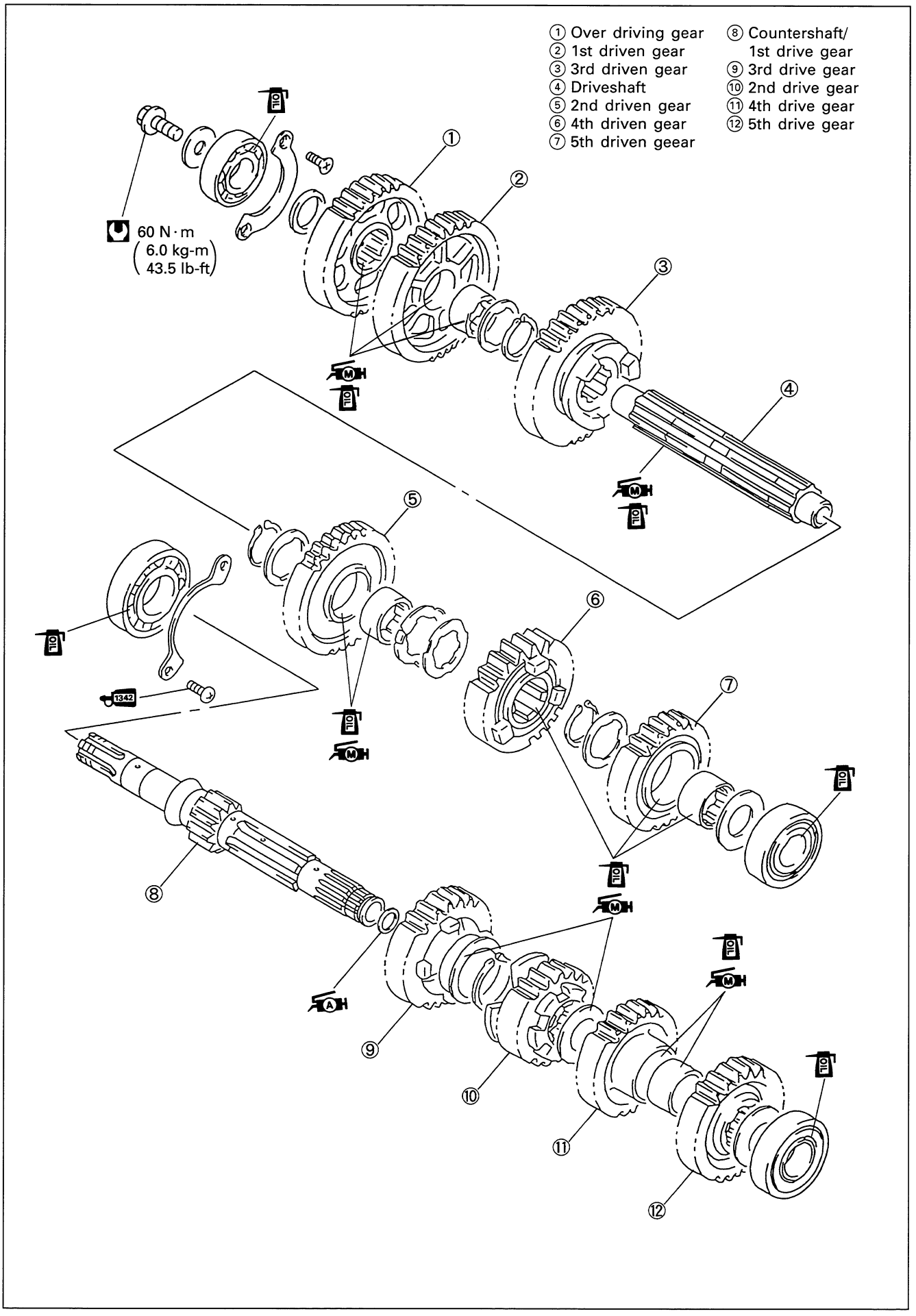
① Over driving gear
② 1st driven gear
③ 3rd driven gear
④ Driveshaft
⑤ 2nd driven gear
⑥ 4th driven gear
⑦ 5th driven geear
⑧ Countershaft/
1st drive gear
⑨ 3rd drive gear
⑩ 2nd drive gear
⑪ 4th drive gear
⑫ 5th drive gear
60 N·m
(6.0 kg-m
43.5 lb-ft)
OIL
M
A
1342

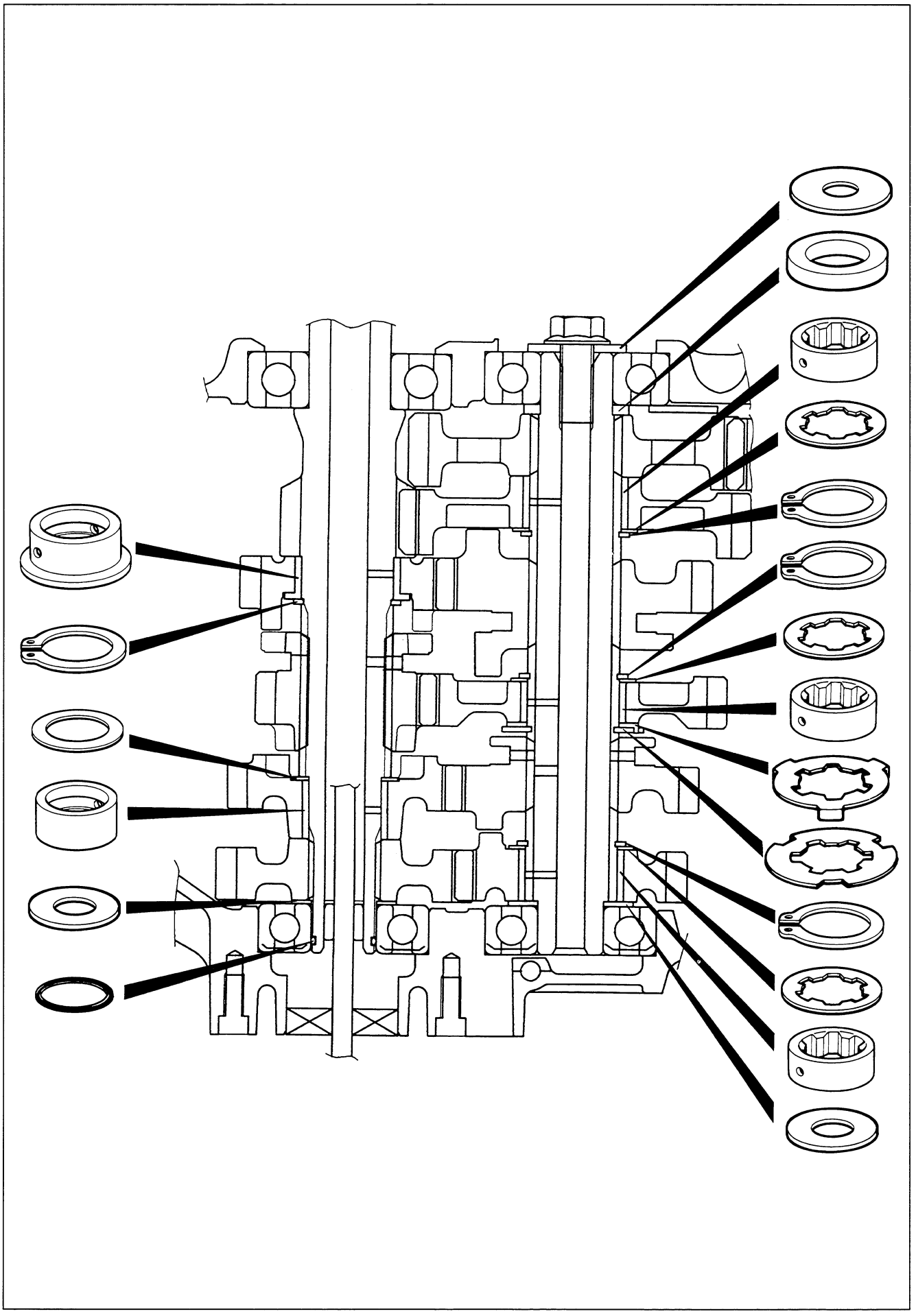

# CONROD/CRANKSHAFT INSPECTION

## CONROD SMALL END I.D.

Measure the conrod small end inside diameter using the small bore gauge.
If the conrod small end inside diameter exceeds the service limit, replace the conrod.

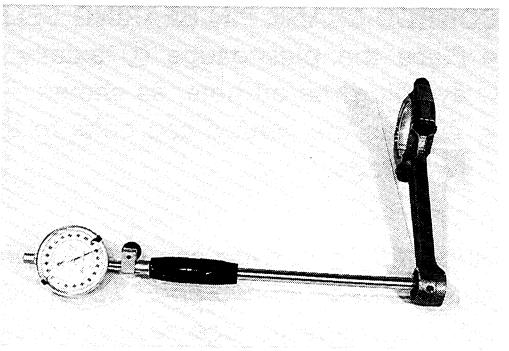

**TOOL 09900-20602: Dial gauge (1/1000 mm, 1 mm)**
**09900-22403: Small bore gauge (18–35 mm)**

**Service Limit**
**Conrod small end I.D.: 23.040 mm (0.9071 in)**

## CONROD BIG END SIDE CLEARANCE

Check the conrod big end side clearance using the thickness gauge. If the clearance exceeds the limit, measure the conrod big end width and crank pin width.
If any of the measurements are out of specification, replace the defective part(-s).

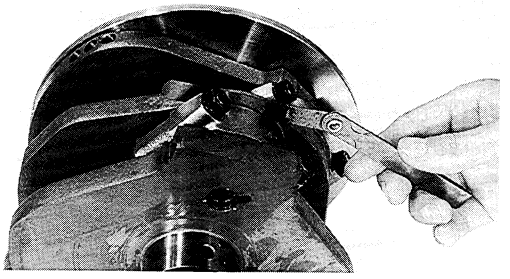

**TOOL 09900-20803: Thickness gauge**

**Service Limit**
**Conrod big end side clearance: 0.3 mm (0.012 in)**

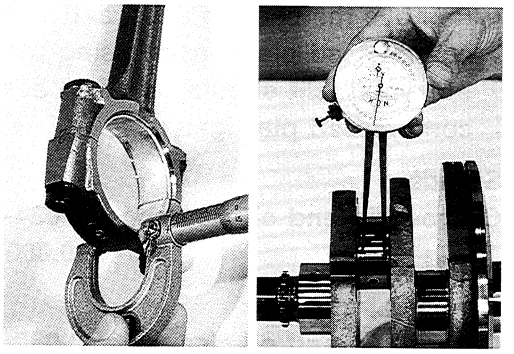

**TOOL 09900-20205: Micrometer (0–25 mm)**
**09900-20605: Dial calipers (10–34 mm)**

**Standard**
**Conrod big end width: 21.95–22.00 mm (0.864–0.866 in)**
**Crank pin width: 22.10–22.15 mm (0.870–0.872 in)**

# CONROD-CRANK PIN BEARING INSPECTION AND SERVICE

## CONROD-CRANK PIN BEARING INSPECTION

- Loosen the bearing cap nuts and tap the bearing cap nut end lightly using a plastic hammer to remove the bearing cap.

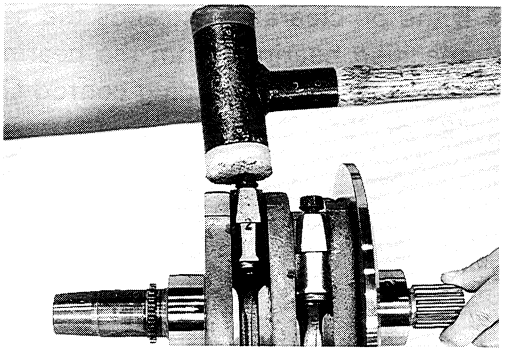

**⚠ CAUTION**

**Be sure to install the bearing cap to the original position when reassembling.**

- Remove the conrods and mark them to identify their respective cylinders.
- Inspect the bearing surfaces for any signs of fusion, pitting, burns, or flaws. If there is any damage, replace them with the specified set of bearings.

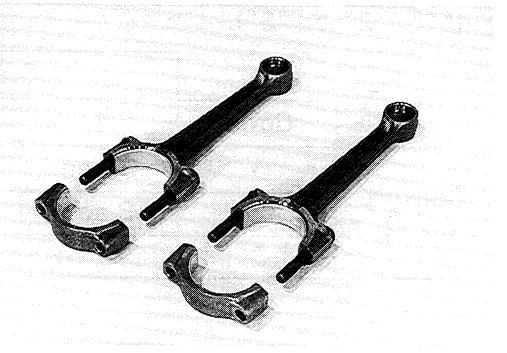

**⚠ CAUTION**

**Never try to remove or loosen the conrod big end stud, otherwise, it will displace the stud and will not fit the bearing cap properly.**

## CONROD-CRANK PIN BEARING SELECTION

- Place the plastigauge ① axially along the crank pin, avoiding the oil hole, as shown.
- Tighten the conrod cap bolts to the specified torque, in two stages.

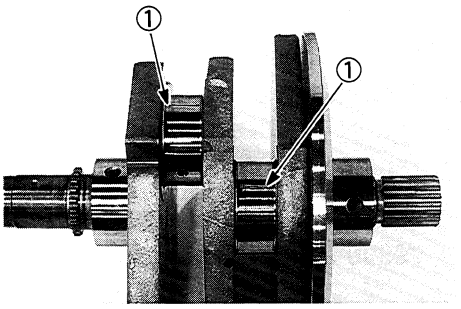


*NOTE:*
*When fitting bearing cap to crack pin, be sure to discriminate between its two ends, I.D. code Ⓐ side and the other. I.D. codes always face each cylinder intake valve sides.*

**Conrod cap nut (Initial): 25 N·m (2.5 kg-m, 18.0 lb-ft)**
**(Final) : 51 N·m (5.1 kg-m, 37.0 lb-ft)**

**TOOL 09900-22301: Plastigauge**

*NOTE:*
*Never rotate the crankshaft or conrod when a piece of plastigauge is installed.*

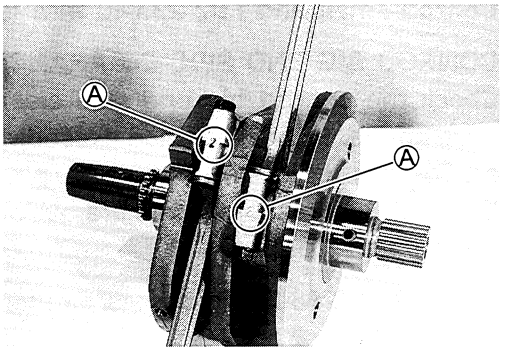


- Remove the bearing caps, and measure the width of the compressed plastigauge using the envelope scale, This measurement should be taken at the widest part of the compressed plastigauge.

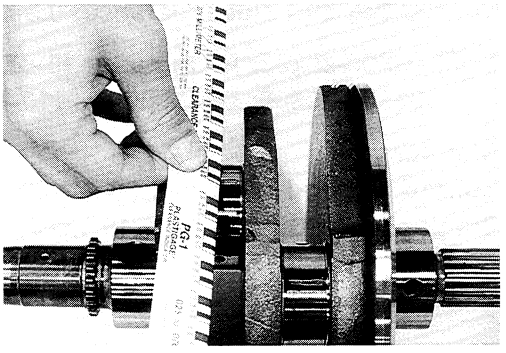

**Standard**
**Conrod big end oil clearance: 0.024–0.042 mm (0.0009–0.0017 in)**

**Service Limit**
**Conrod big end oil clearance: 0.080 mm (0.0031 in)**

- If the oil clearance exceeds the service limit, select the specified bearings from the bearing selection table.
- Check the corresponding conrod I.D. code numbers ("1" "2" or "3") ②.

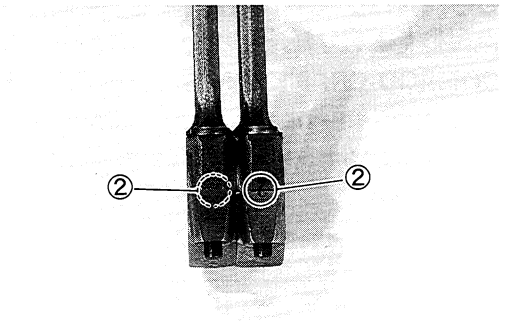


- Check the corresponding crank pin O.D. code numbers ("1", "2" or "3").

| | | Crank pin O.D. | | |
|---|---|---|---|---|
| | **Code** | 1 | 2 | 3 |
| **Conrod I.D. ②** | 1 | Green | Black | Brown |
| | 2 | Black | Brown | Yellow |
| | 3 | Brown | Yellow | Blue |

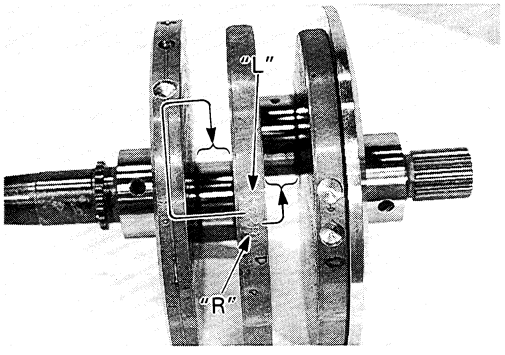

**Conrod I.D. specification**

| Code | I.D. specification |
|---|---|
| 1 | 53.000–53.006 mm (2.0866–2.0868 in) |
| 2 | 53.006–53.012 mm (2.0868–2.0871 in) |
| 3 | 53.012–53.018 mm (2.0871–2.0873 in) |

**Crank pin O.D. specification**

| Code | O.D. specification |
|---|---|
| 1 | 49.994–50.000 mm (1.9683–1.9685 in) |
| 2 | 49.988–49.994 mm (1.9680–1.9683 in) |
| 3 | 49.982–49.988 mm (1.9678–1.9680 in) |

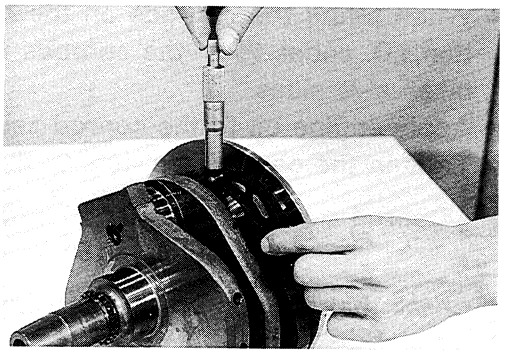

**TOOL 09900-20202: Micrometer (25–50 mm)**

**Bearing thickness**

| Color (Part No.) | Thickness |
|---|---|
| Green (12164-38B01-0A0) | 1,485–1.488 mm (0.0585–0.0586 in) |
| Black (12164-38B01-0B0) | 1.488–1.491 mm (0.0586–0.0587 in) |
| Brown (12164-38B01-0C0) | 1.491–1.494 mm (0.0587–0.0588 in) |
| Yellow (12164-38B01-0D0) | 1.494–1.497 mm (0.0588–0.0589 in) |
| Blue (12164-38B01-0E0) | 1.497–1.500 mm (0.0589–0.0591 in) |

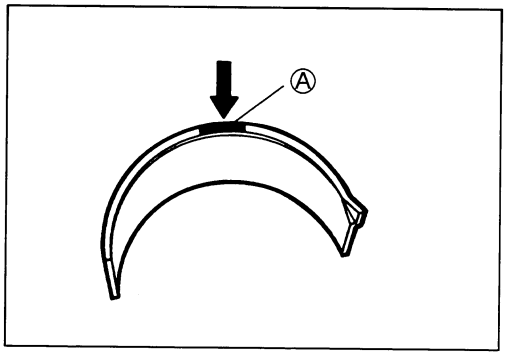


Ⓐ Color code

**⚠ CAUTION**

**The bearings should be replaced as a set.**

**BEARING ASSEMBLY**

- When installing the bearings into the bearing cap and conrod, be sure to install the tab Ⓑ first, and then press in the opposite side of the bearing.

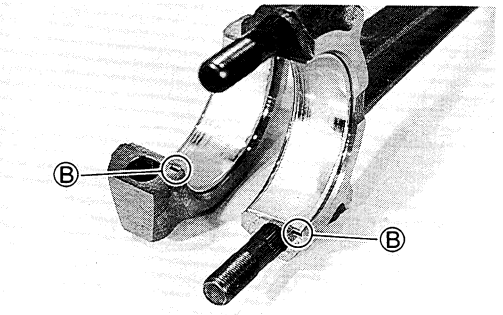

- Apply SUZUKI MOLY PASTE and engine oil to the crank pin and bearing surface.

**99000-25140: SUZUKI MOLY PASTE**

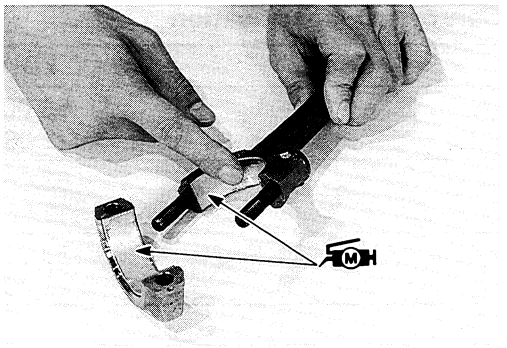

- When fitting the conrods on the crankshaft, make sure that I.D. codes Ⓐ of the conrods face each cylinder intake valve sides.
- Apply engine oil to the conrod cap bolts.
- Tighten the conrod cap nuts to the specified torque.

**Conrod cap nut (Initial) : 25 N·m (2.5 kg-m, 18.0 lb-ft)**
**(Final) : 51 N·m (5.1 kg-m, 37.0 lb-ft)**

- Check that the conrod moves smoothly.

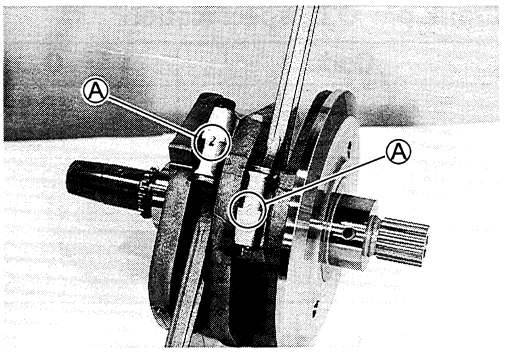


## CRANKCASE-CRANKSHAFT BEARING INSPECTION AND SERVICE

### CRANKCASE-CRANKSHAFT BEARING INSPECTION

- Inspect the crankshaft journal for any damage.
- Measure the crankshaft journal O.D. by using the special tool.

**Standard**
**Crankshaft journal O.D.: 51.965–51.980 mm (2.0459–2.0465 in)**

**09900-20203: Micrometer (50–75 mm)**

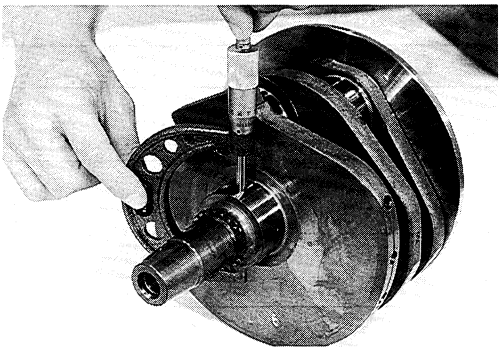

- Inspect the crankshaft journal bearings for any damage. If any, replace them with a specified set of bearings.

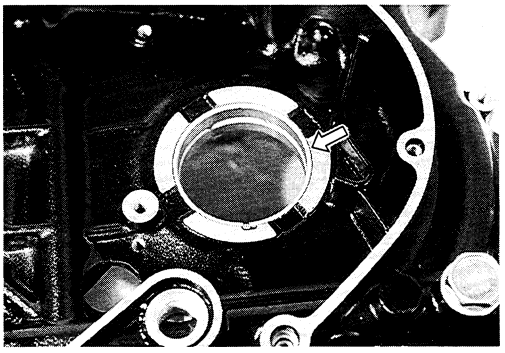

- Measure the crankshaft journal I.D. by using the special tool.

**Standard**
**Crankshaft journal I.D.: 52.000–52.015 mm (2.0472–2.0478 in)**

**09900-20508: Cylinder gauge set**

If the crankshaft journal I.D. exceeds the limit, replace the bearing with new ones in the following procedure.

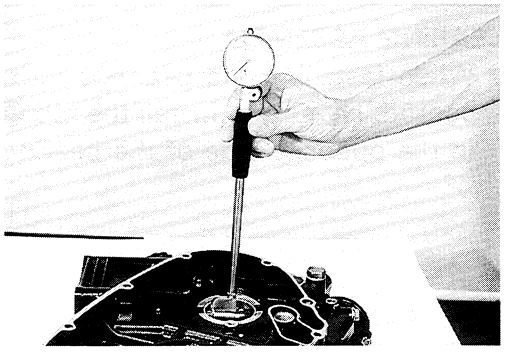

- Remove the crankshaft journal bearing with taking care not to damage the crankcase bearing hole.

*NOTE:*
*Remove the right side crankshaft journal bearing from inside to outside of the right crankcase halves. Remove the left side crankshaft journal bearing from outside to inside of the left crankcase halves.*

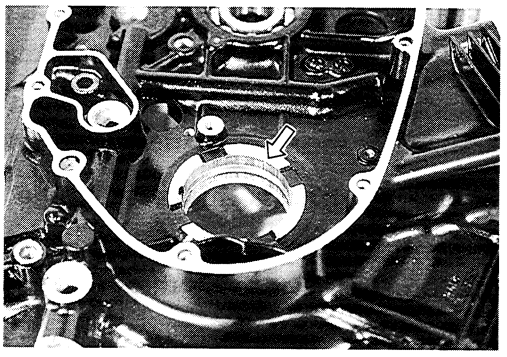

- Inspect the bearing hole of crankcase for any sign of pitting or flaw.
  If any, repair it with emery paper.
- Install the bearings into the crankcases by hydraulic press.

*NOTE:*
*When installing the bearing, be sure to install the stopper part Ⓐ to the groove Ⓑ.*

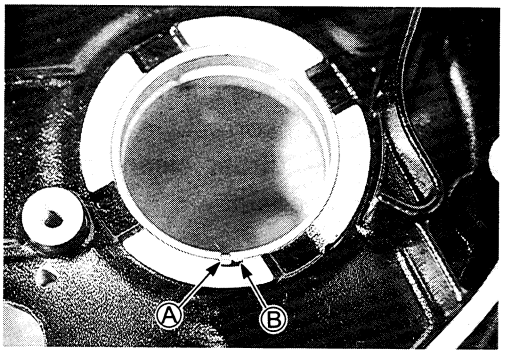


- Honing the bearings with specified value.

**Standard**
**Crankshaft journal I.D.: 52.000–52.015 mm (2.0472–2.0478 in)**

## CRANKSHAFT THRUST CLEARANCE ADJUSTMENT

- Install the crankshaft in the left crankcase half and install the thrust shim on the crankshaft.
- Install the right crankcase half and tighten the crankcase bolts temporally.

*NOTE:*
** It is not necessary to apply SUZUKI BOND "1207B" to the mating surface.*
** The oil grooved face Ⓐ of thrust shim ① is faced to crankshaft web side.*

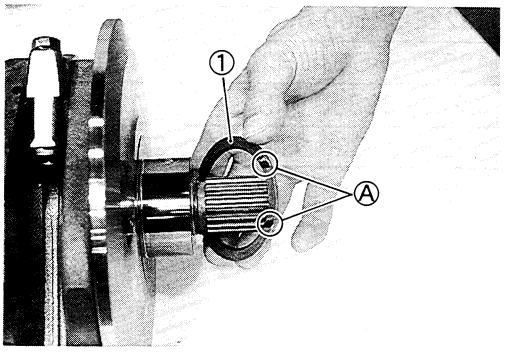


- Install the thrust washer, cam sprocket drive gear and primary drive gear on the right end of the crankshaft and tighten primary drive gear bolt to the specified torque. (See to p. 3-44.)

**TOOL 09930-40113 : Rotor holder**

**Primary drive gear bolt: 150 N·m (15.0 kg-m, 108.5 lb-ft)**

*NOTE:*
*This bolt has left-hand thread.*

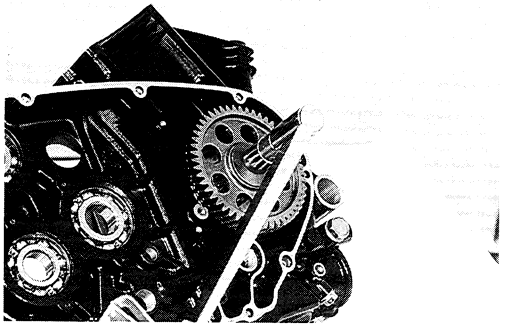

- Use a thickness gauge to measure the thrust clearance at some places between right crankcase and thrust washer.

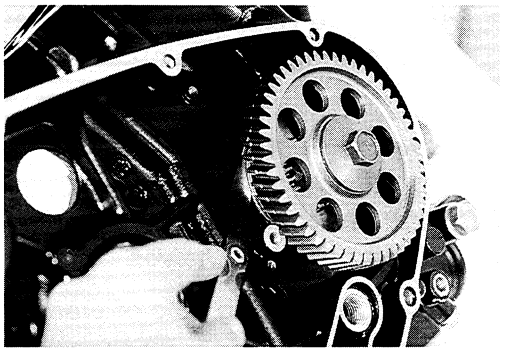

**Standard**
**Crankshaft thrust clearance: 0.05–0.10 mm (0.002–0.004 in)**

**TOOL 09900-20803: Thickness gauge**

If the thrust clearance exceeds the standard range, adjust the thrust clearance by the following procedures:

- Remove the thrust shim, and measure its thickness with a micrometer.
- Change the thrust shim with the other shim if the thrust clearance is incorrect.
- Perform the thrust clearance measurement described above once again.

**TOOL 09900-20205: Micrometer (0–25 mm)**

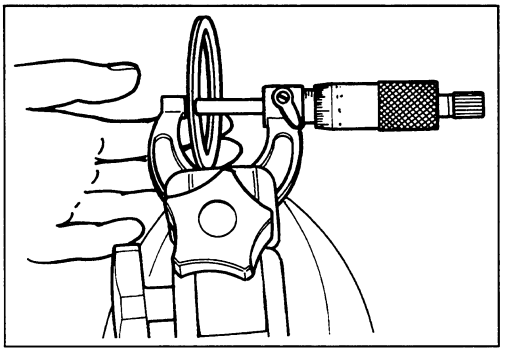

**Checking to make sure it is within standard**

Unit: mm (in)

| Part number | Thrust shim thickness | ID No. |
|---|---|---|
| 12228-38B00-0A0 | 1.925–1.950 (0.0758–0.0768) | 1 |
| 12228-38B00-0B0 | 1.950–1.975 (0.0768–0.0778) | 2 |
| 12228-38B00-0C0 | 1.975–2.000 (0.0778–0.0787) | 3 |
| 12228-38B00-0D0 | 2.000–2.025 (0.0787–0.0797) | 4 |
| 12228-38B00-0E0 | 2.025–2.050 (0.0797–0.0807) | 5 |
| 12228-38B00-0F0 | 2.050–2.075 (0.0807–0.0817) | 6 |
| 12228-38B00-0G0 | 2.075–2.100 (0.0817–0.0827) | 7 |
| 12228-38B00-0H0 | 2.100–2.125 (0.0827–0.0837) | 8 |
| 12228-38B00-0I0 | 2.125–2.150 (0.0837–0.0846) | 9 |
| 12228-38B00-0J0 | 2.150–2.175 (0.0846–0.0856) | 10 |

## TRANSMISSION/CRANKSHAFT/CONROD INSTALLATION

Refer to the engine reassembly and the engine installation sections for these engine components installation.

* **ENGINE REASSEMBLY ..... See pp. 3-30 to -60.**
* **ENGINE INSTALLATION ..... See pp. 3-11 to -15.**

# ENGINE LUBRICATION SYSTEM

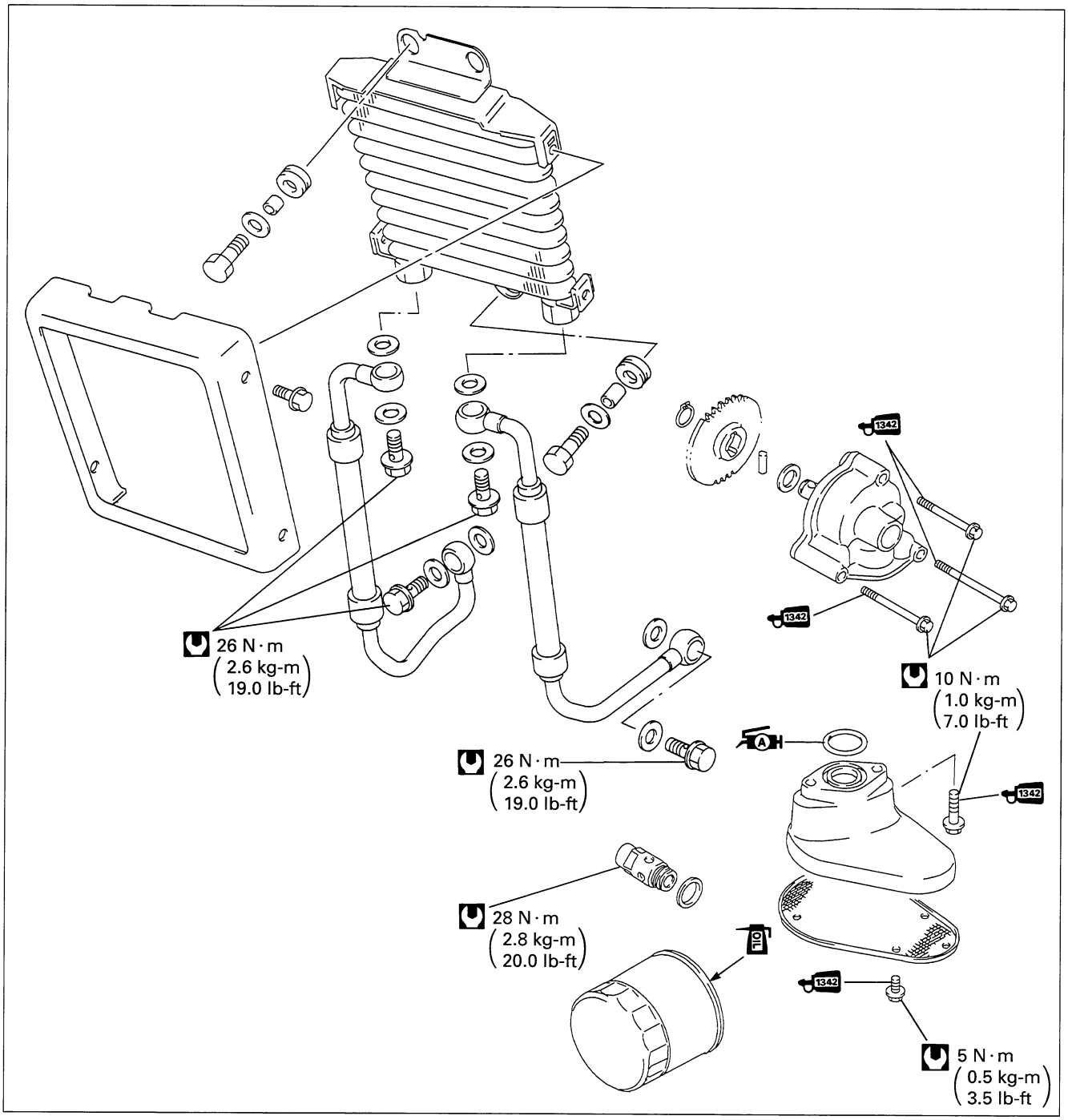


3G

## CONTENTS


*OIL PUMP/SUMP FILTER* ..... *3G- 1*
*OIL PRESSURE REGULATOR* ..... *3G- 3*
*OIL PRESSURE SWITCH/OIL COOLER* ..... *3G- 5*
*OIL FILTER* ..... *3G- 7*
*OIL PRESSURE* ..... *3G- 7*
*OIL JET* ..... *3G- 7*
*ENGINE LUBRICATION SYSTEM CHART* ..... *3G-12*
*ENGINE LUBRICATION SYSTEM* ..... *3G-13*
*CYLINDER HEAD COOLING SYSTEM CHART* ..... *3G-15*
*CYLINDER HEAD COOLING SYSTEM* ..... *3G-16*

# OIL PUMP/OIL SUMP FILTER

## REMOVAL

The crankcase must be separated to service the oil pump. The oil pump service requires engine removal and disassembly. Refer to the engine removal and the engine disassembly sections for the oil pump removal.

* **ENGINE REMOVAL ..... See pp. 3-2 to -10.**
* **ENGINE DISASSEMBLY ..... See pp. 3-16 to -30.**

## DISASSEMBLY

- Remove the oil sump filter by removing the bolts.

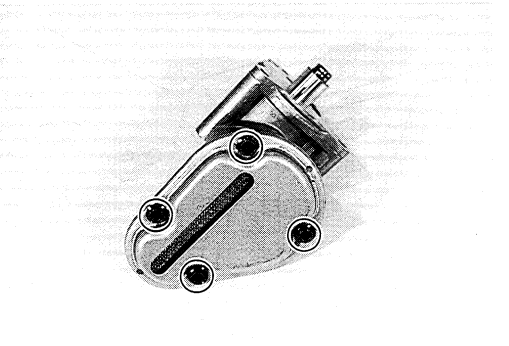

- Remove the oil sump filter holder by removing the bolts.

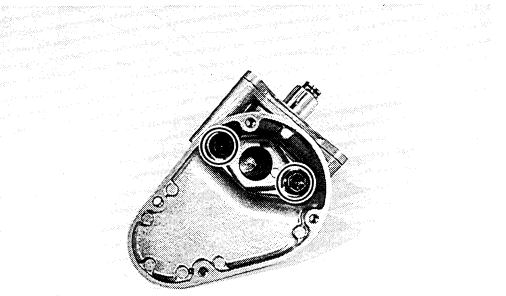

- Remove the O-ring.

**⚠ CAUTION**

**The removed O-ring must be replaced with a new one.**

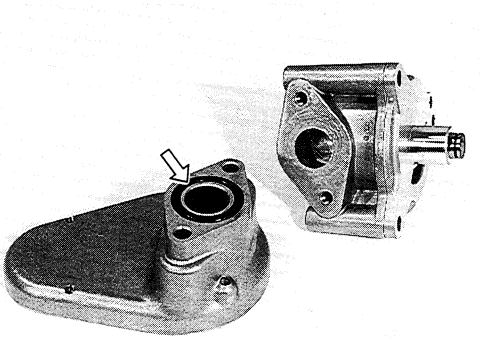

## INSPECTION

Rotate the oil pump by hand and check that it moves smoothly. If it does not move smoothly, replace the oil pump assembly.

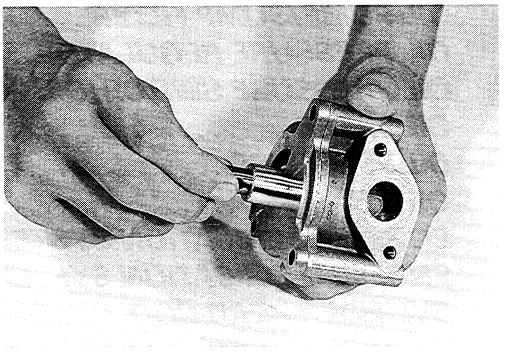

**⚠ CAUTION**

**Do not attempt to disassemble the oil pump assembly.**
**The oil pump is available only as an assembly.**

## OIL SUMP FILTER CLEANING

Clean the oil sump filter using compressed air.

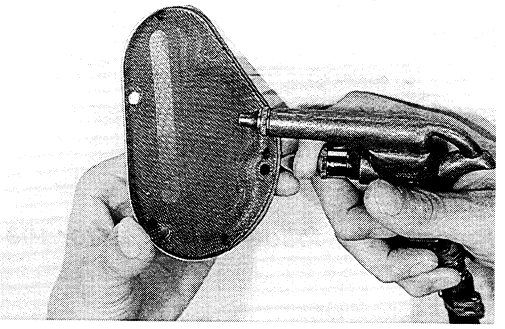

## REASSEMBLY

- When installing the O-ring, apply grease to it.

**99000-25010: SUZUKI SUPER GREASE "A"**

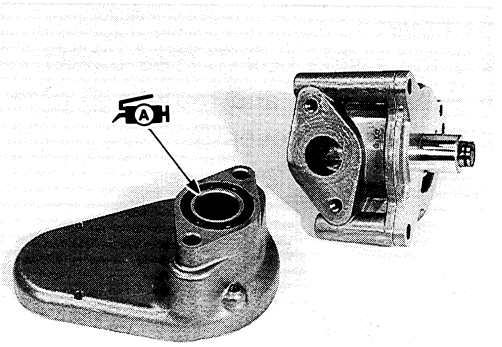

- Apply a small quantity of the THREAD LOCK "1342" to the oil sump filter and holder bolts and tighten them securely.

**99000-32050: THREAD LOCK "1342"**

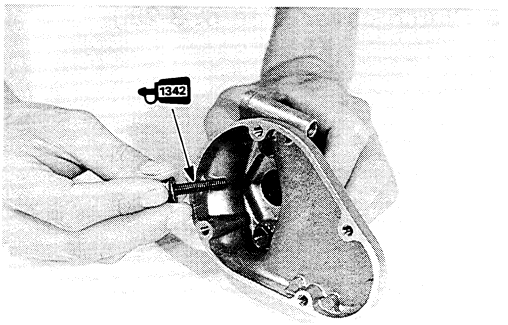

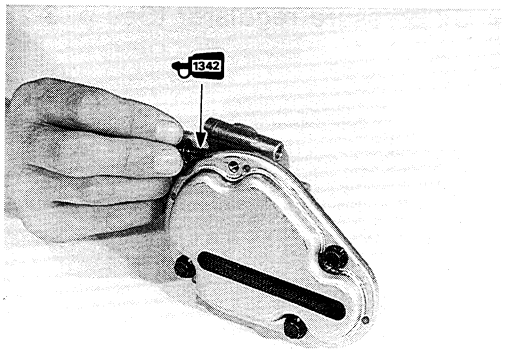

## INSTALLATION

Refer to the engine reassembly and the engine installation sections to install the oil pump.

* **ENGINE REASSEMBLY ..... See pp. 3-31 to -60.**
* **ENGINE INSTALLATION ..... See pp. 3-11 to -15.**

# OIL PRESSURE REGULATOR

## REMOVAL

After draining the engine oil, the following components must be removed in the described order before removing the oil pressure regulator.

*NOTE:*
*Refer to the following pages for the details of each step.*

**Drain:**
- Engine oil (See p. 2-6.)

**Remove:**
- Engine side box ① (See p.3-3.)
- Exhaust pipe and muffler ② (See p. 3-5.)
- Rear clutch cover ③

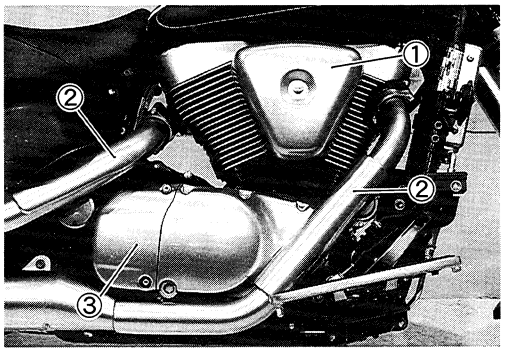


- Clutch cover (See p. 3-20.)

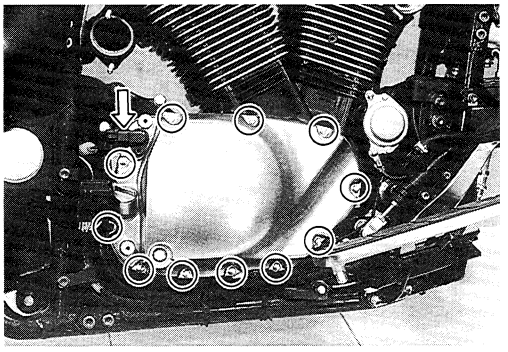

- Oil pressure regulator (See p. 3-23.)

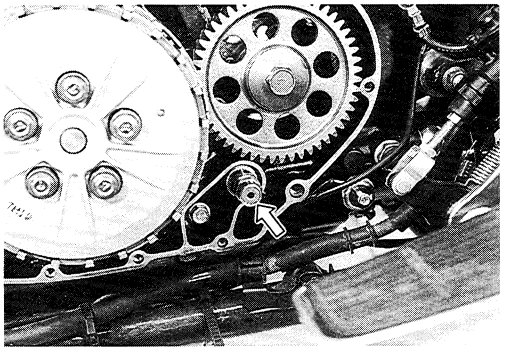

## OIL PRESSURE REGULATOR INSPECTION

Check the operation of the oil pressure regulator by pushing on the piston with an appropriately shaped tool. If the piston does not operate, replace the oil pressure regulator with a new one.

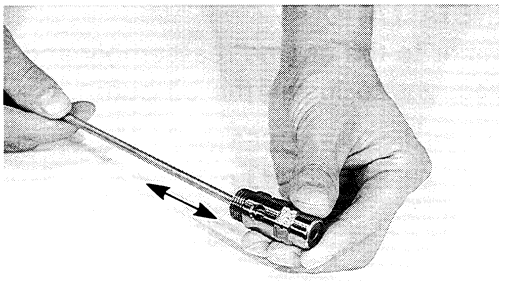

## OIL PRESSURE REGULATOR INSTALLATION

Installation is in the reverse order of removal.

*NOTE:*
*Refer to the following pages for the details of each step.*

**Install:**
- Copper washer
- Oil pressure regulator (See p. 3-45.)

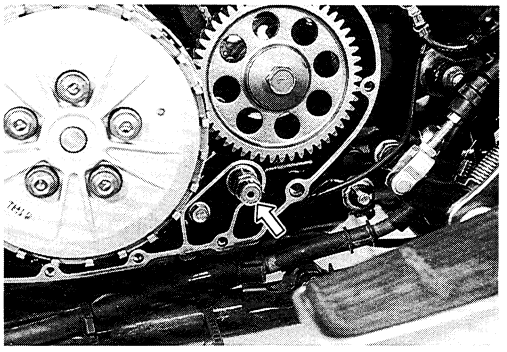

- Dowel pins
- Gasket (See p. 3-49.)

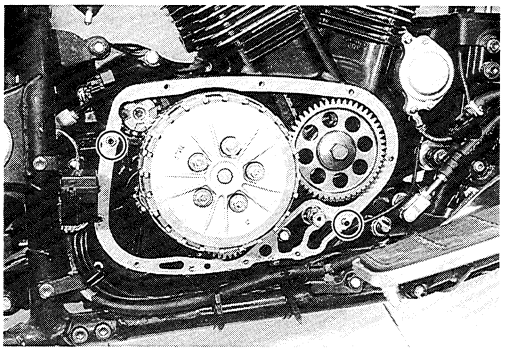

- Clutch cover (See p. 3-50.)

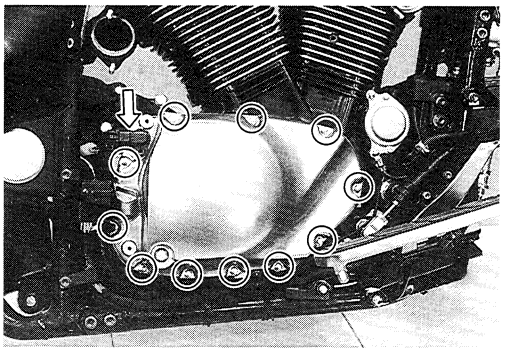

- Rear clutch cover ③
- Exhaust pipe and muffler ② (See p. 3-15.)
- Engine side box ①

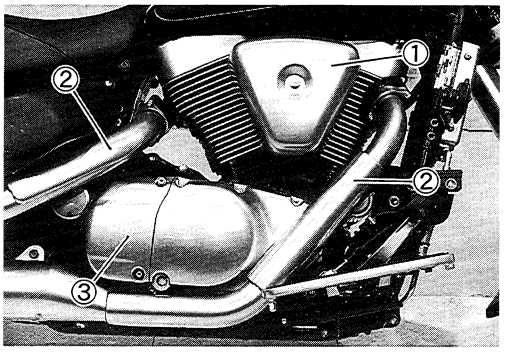


Adjust the following item to specification.

| | Page |
|---|---|
| * Engine oil | 2-6 |

# OIL PRESSURE SWITCH/OIL COOLER

## REMOVAL

After draining the engine oil, remove the oil pressure switch and the oil cooler.

*NOTE:*
*Refer to the following pages for the details of each step.*

**Drain:**
- Engine oil (See p. 2-6.)

**Remove:**
- Oil cooler union

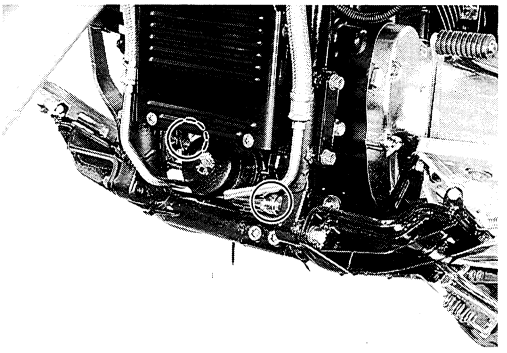

- Oil cooler
- Oil cooler cover

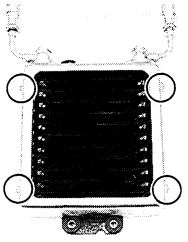

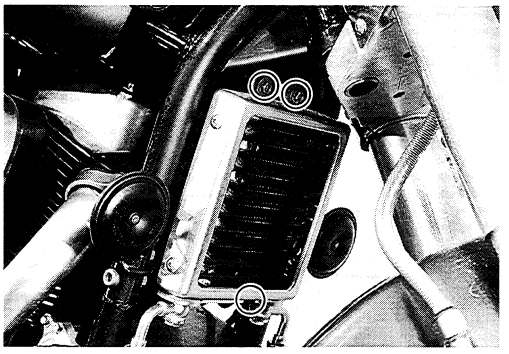

- Oil pressure switch

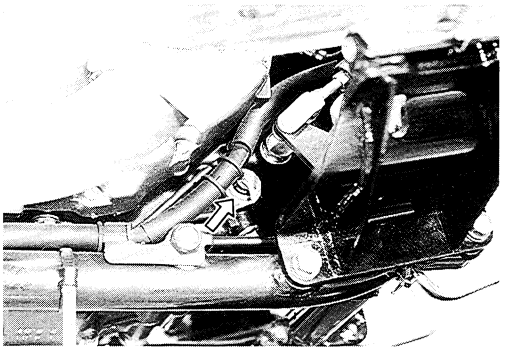

## OIL PRESSURE SWITCH INSPECTION

See p. 7-35.

## OIL COOLER HOSE INSPECTION

Inspect the oil cooler hoses for damage and oil leaks. If any defects are found, replace the oil cooler hose(-s) with a new one.

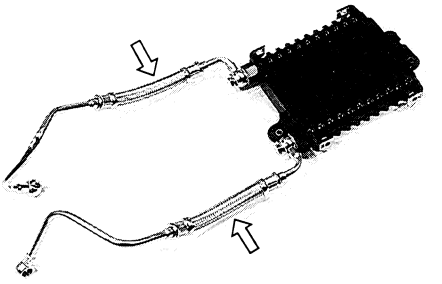

## OIL COOLER INSPECTION AND CLEANING

Remove any foreign matter that is stuck in the oil cooler fins using compressed air.
Inspect the oil cooler for oil leaks. If any defects are found, replace the oil cooler with a new one.
If the fins are bent or dented, repair them by carefully straightening them with the blade of a small screwdriver.

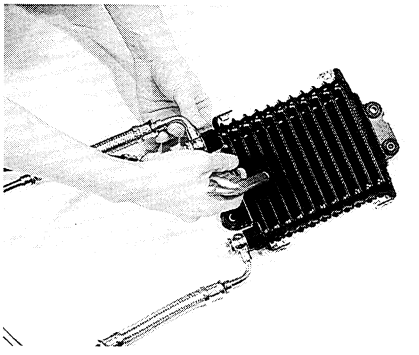

## INSTALLATION

Installation is in the reverse order of removal.

*NOTE:*
*Refer to the following pages for the details of each step.*

**Install:**

- Oil cooler cover
- Oil cooler (See p. 3-13.)

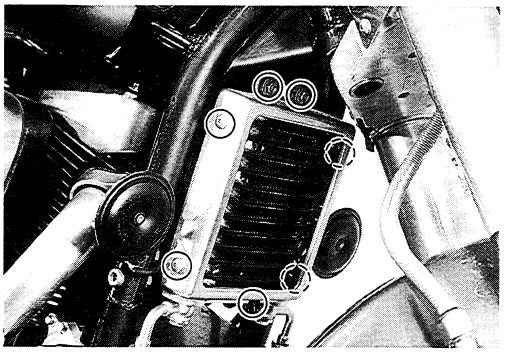

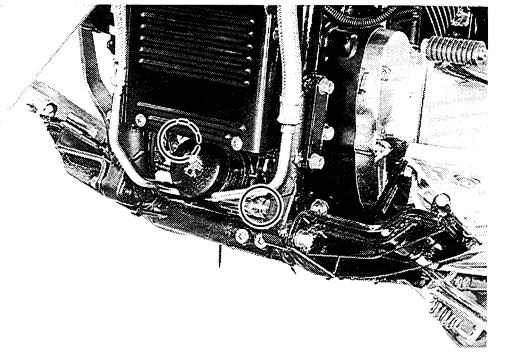

- Oil pressure switch

*NOTE:*
*When installing the oil pressure switch, apply SUZUKI BOND "1207B" to its thread and tighten it to the specified torque.*

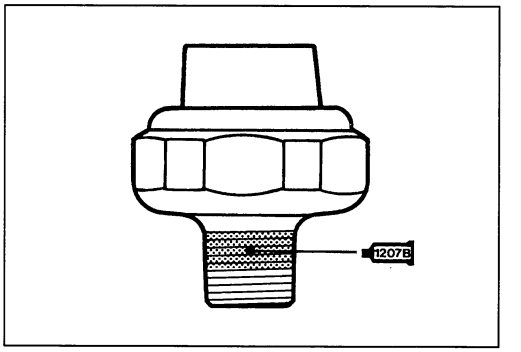


**1207B 99000-31140: SUZUKI BOND "1207B"**

**Oil pressure switch: 14 N·m (1.4 kg-m, 10.0 lb-ft)**

Adjust the following item to the specification.

| | Page |
|---|---|
| * Engine oil | 2-6 |

## OIL FILTER

See pp. 2-6 and -7.

## OIL PRESSURE

See p. 2-20.

## OIL JET

### OIL JETS (For transmission) REMOVAL

After draining the engine oil, remove the oil jets (for transmission).

*NOTE:*
*Refer to the following pages for the details of each step.*

**Drain:**
- Engine oil (See p. 2-6.)

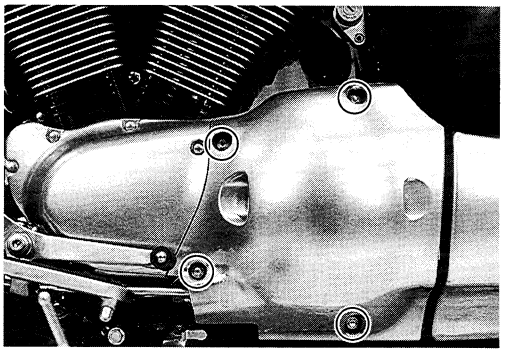

**Remove:**
- Secondary gear case cover (See p. 3-7.)
- Gearshift lever (See p. 3-7.)
- Clutch release cylinder (See p. 3-8.)
- Neutral indicator switch lead wire

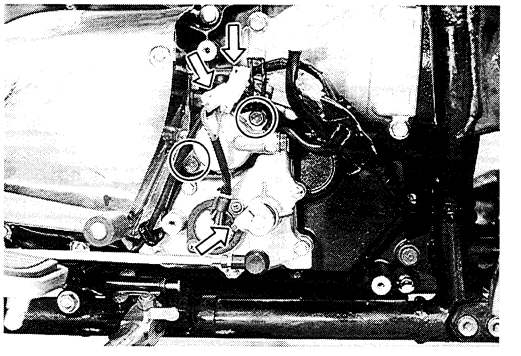

- Gearshift cover (See p. 3-25.)

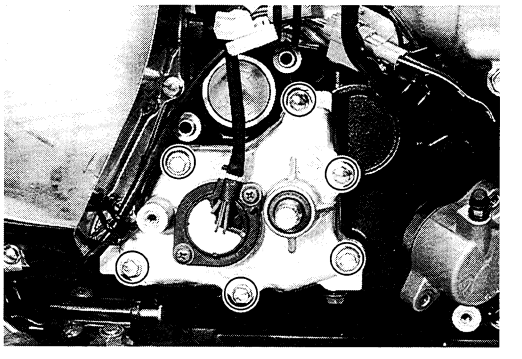

- Gasket
- Oil jet (for transmission) ①

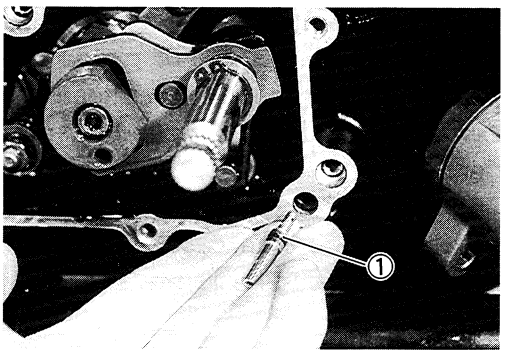


**OIL JET (For secondary bevel gears) REMOVAL**

The following component parts must be removed in the described order before removing the oil jet (for secondary bevel gears).

*NOTE:*
*Refer to the following pages for the details of each step.*

**Drain:**
- Engine oil (See p. 2-6.)

**Remove:**
- Secondary gear case cover (See p. 3-7.)
- Swingarm (See pp. 3-35 and -36.)
- Boot
- Universal joint

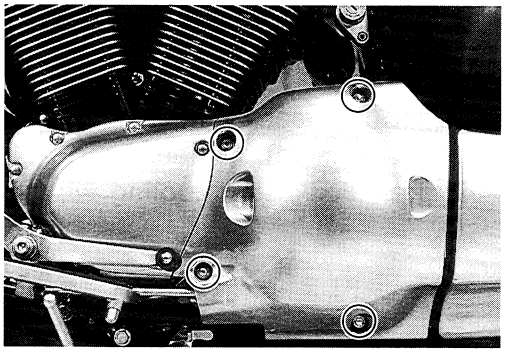

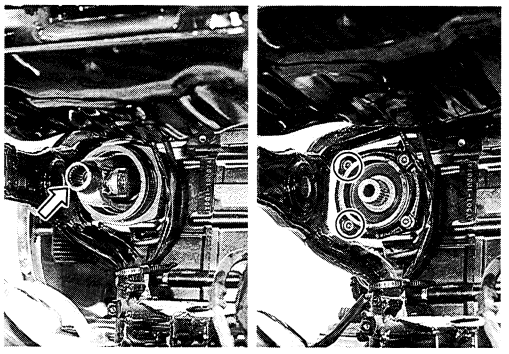

- Secondary gear case (See pp. 3-24 and -25.)

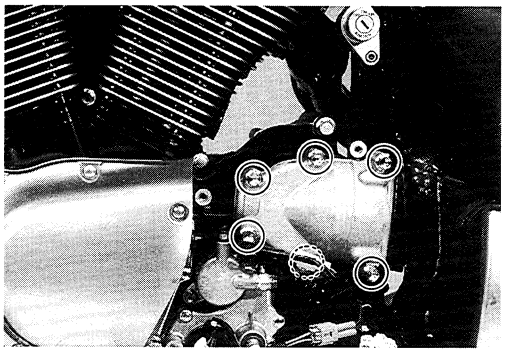

- Oil jet (for secondary bevel gears)

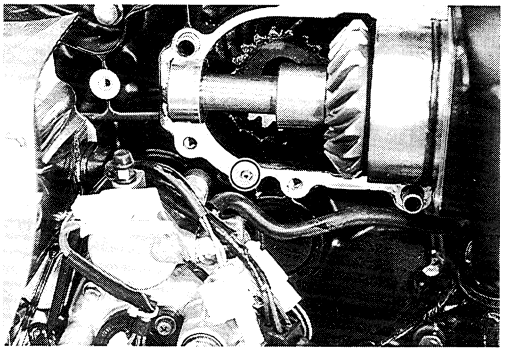

**OIL JETS (For rear cylinder head cooling and rear cylinder head) AND OIL JETS (For piston cooling) REMOVAL**

The oil jets (for rear cylinder head cooling ① and rear cylinder head ②) can be removed after removing the rear cylinder.

The oil jets (for piston cooling ③) can be removed after separating the crankcase.

Refer to the engine removal and cylinder/piston removal sections.

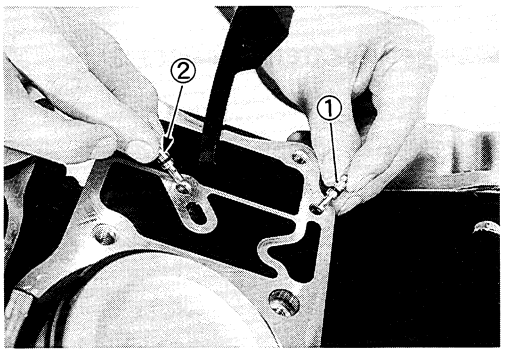


* **ENGINE REMOVAL ..... See pp. 3-2 to -10.**
* **ENGINE DISASSEMBLY ..... See pp. 3-16 to -30.**

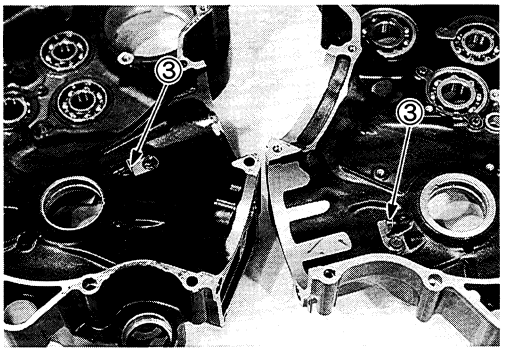


**Remove:**

- Oil jet (For rear cylinder head cooling #22) ①
- Oil jet (For rear cylinder head #14) ②
- Oil jets (For piston cooling #8) ③

**INSPECTION**

Make sure that the piston cooling oil jets and the oil jets are not clogged. If they are clogged, clean their oil passage using a wire of the proper size and compressed air.

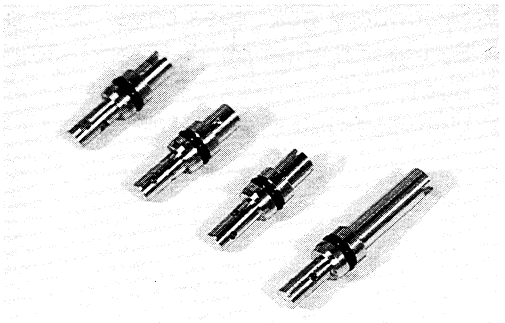

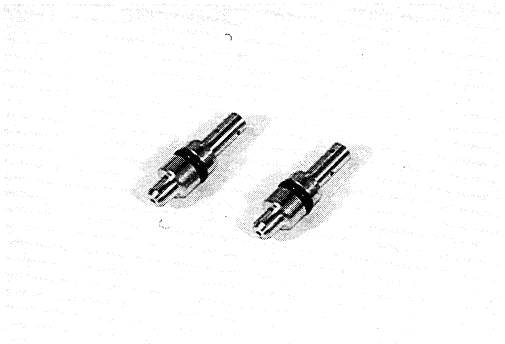

**OIL JETS (For rear cylinder head cooling and rear cylinder head) AND OIL JETS (For piston cooling) INSTALLATION**

Refer to the cylinder/piston installation and the engine installation sections.

* **ENGINE REASEEMBLY ..... See pp. 3-31 to -60.**
* **ENGINE INSTALLATION ..... See pp. 3-11 to -15.**

*NOTE:*

*Before installing the oil jets, apply a light coat of engine oil to the O-rings.*

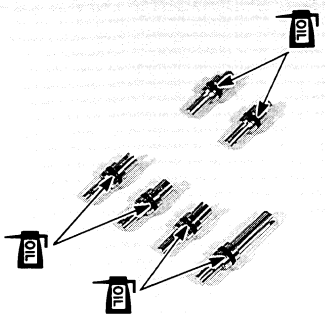

**OIL JET (For secondary bevel gears)**
Installation is in the reverse order of removal.

*NOTE:*
*Refer to the following pages for the details of each step.*

**Install:**
- Oil jet (See p. 3-41.)

*NOTE:*
*Before installing the oil jet, apply a light coat of engine oil to the O-ring.*

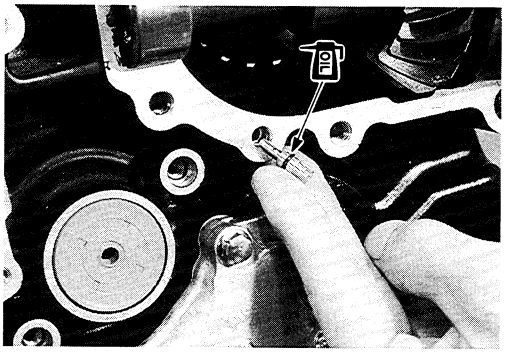


- Dowel pin (See p. 3-41.)

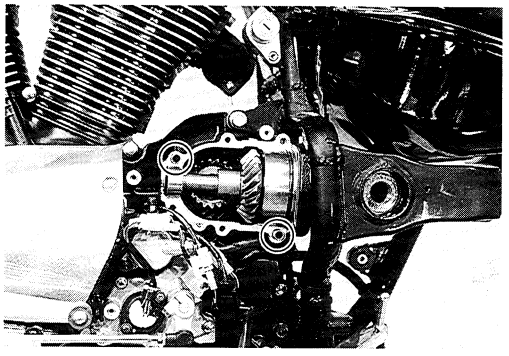

- Secondary gear case (See. p. 3-41.)
- Boot (See p. 3-11.)
- Universal joint

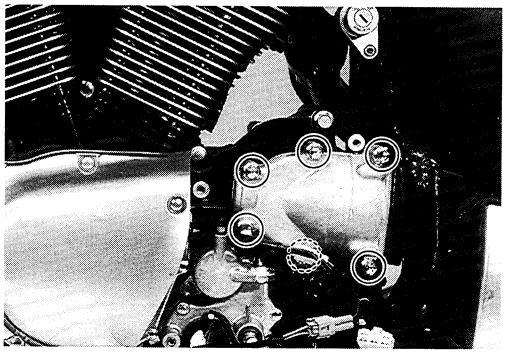

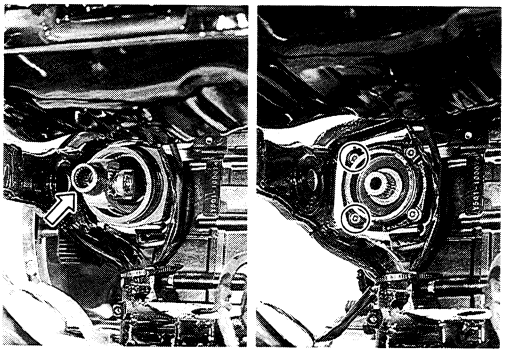

- Swingarm (See pp. 6-40 to -42.)
- Secondary gear case cover

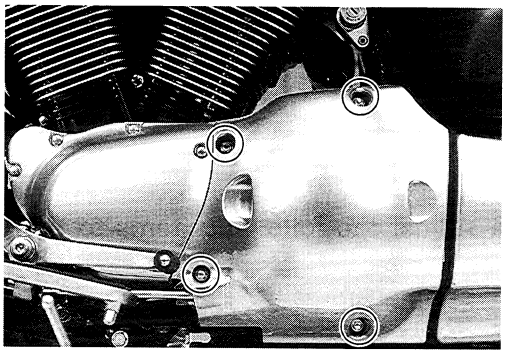

- Adjust the following item to the specification.

| | Page |
|---|---|
| * Engine oil | 2-6 |

**OIL JET (For transmission)**

Installation is in the reverse order of removal.

*NOTE:*
*Refer to the following pages for the details of each step.*

**Install:**

- Oil jet

*NOTE:*
*Before installing the oil jet, apply a light coat of engine oil to the O-ring.*

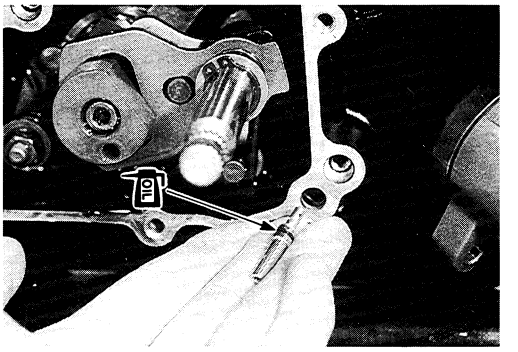

- Gasket
- Dowel pin (See p. 3-39.)

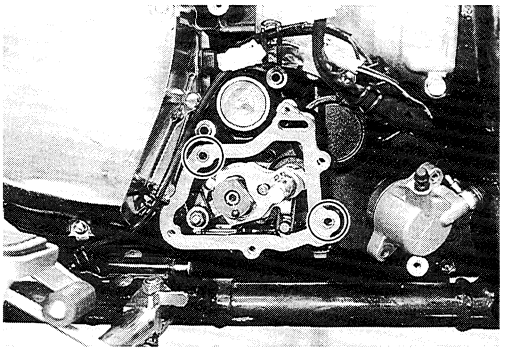

- Gearshift cover (See. p. 3-40.)

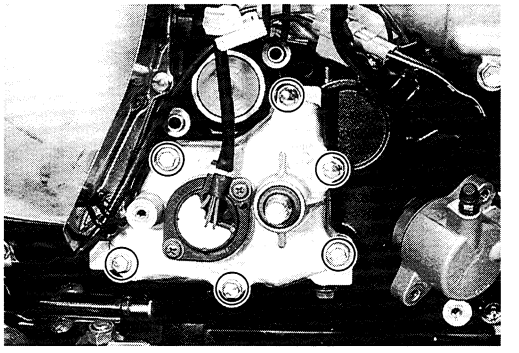

- Neutral indicator switch lead wire
- Clutch release cylinder (See p. 3-14.)
- Gearshift lever (See p. 3-14.)

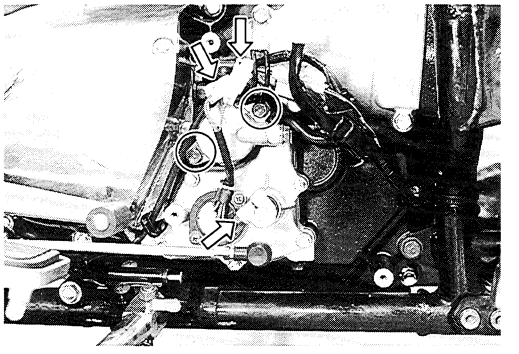

- Secondary gear case cover

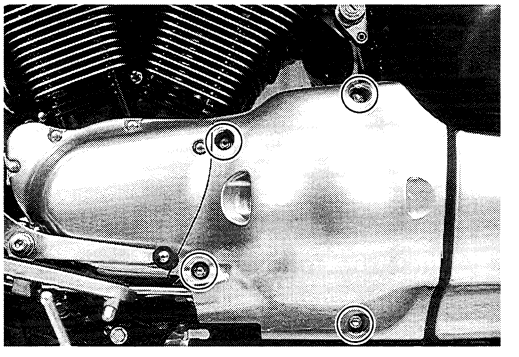

- Adjust the following items to the specification.

| | Page |
|---|---|
| * Engine oil | 2-6 |
| * Clutch | 2-11 |

# ENGINE LUBRICATION SYSTEM CHART

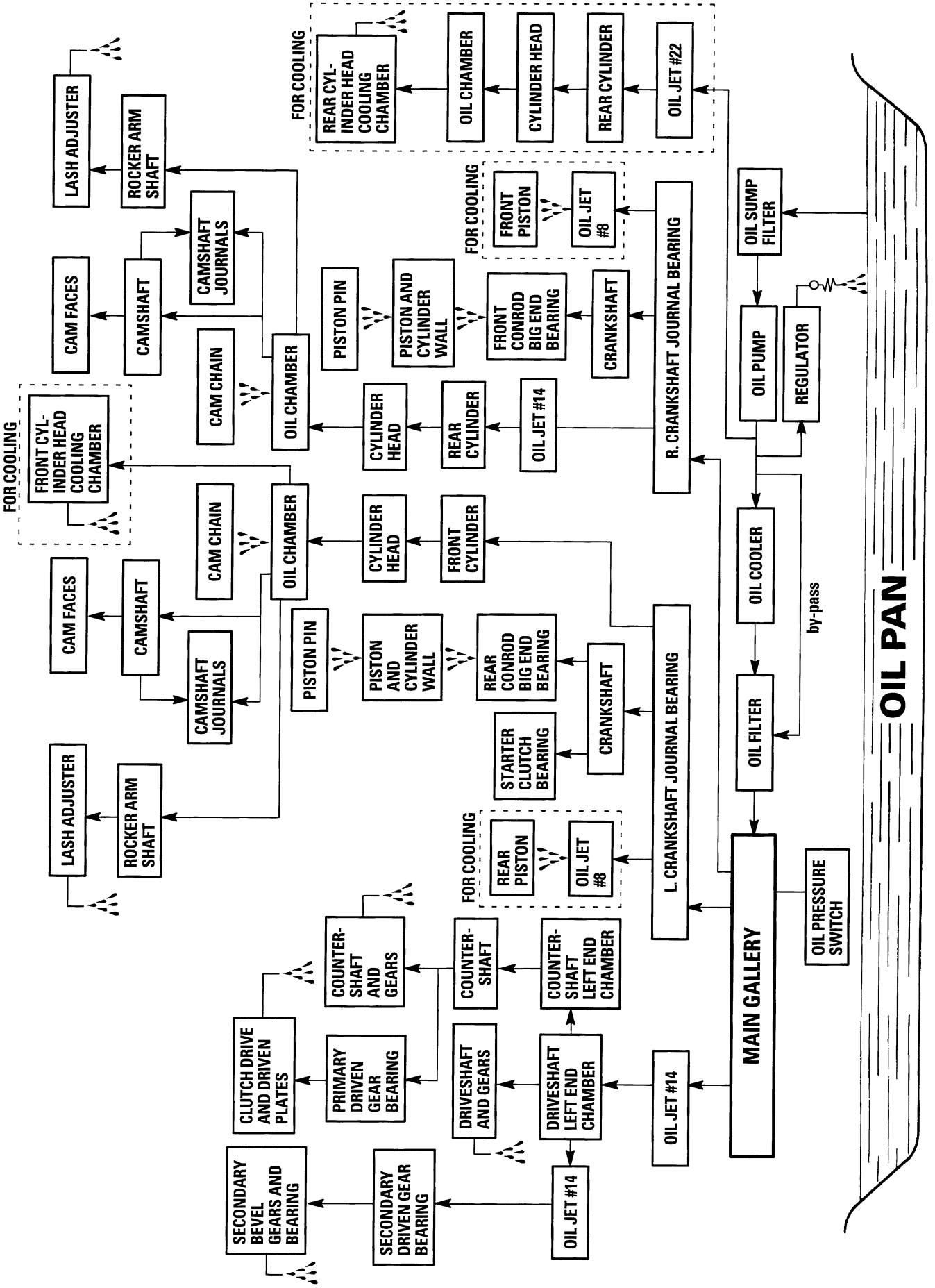

# ENGINE LUBRICATION SYSTEM

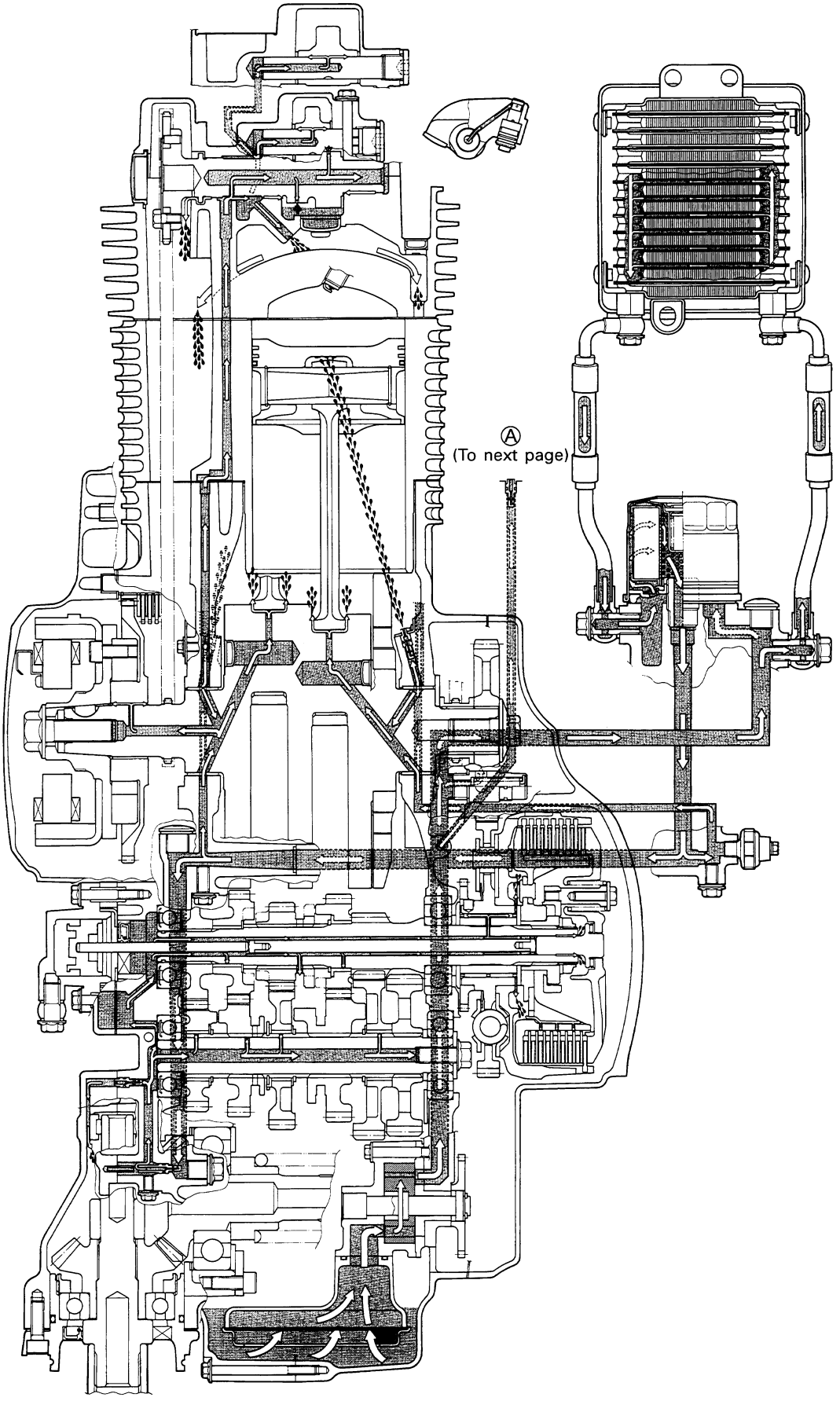

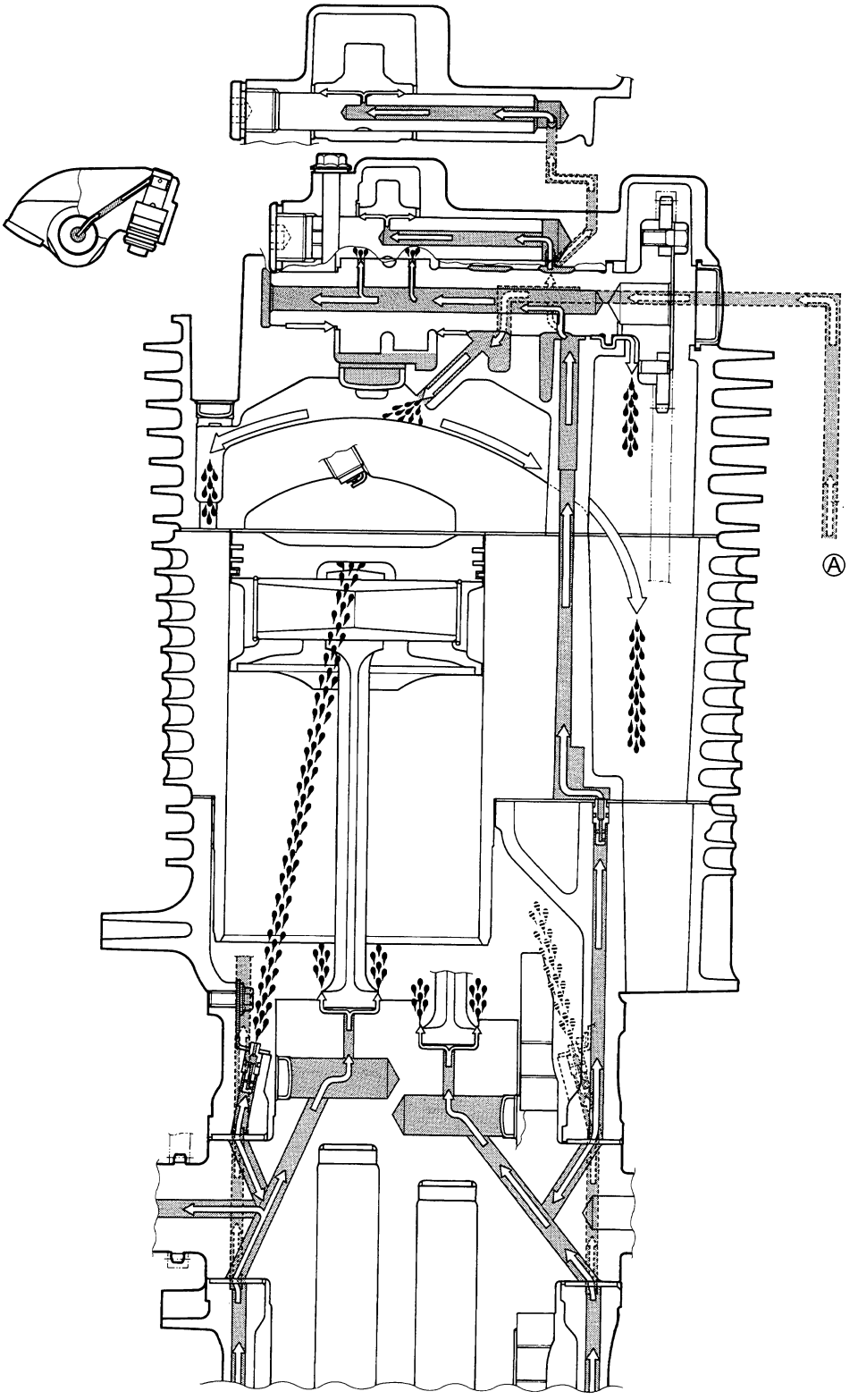


Rear cylinder

# CYLINDER HEAD COOLING SYSTEM CHART

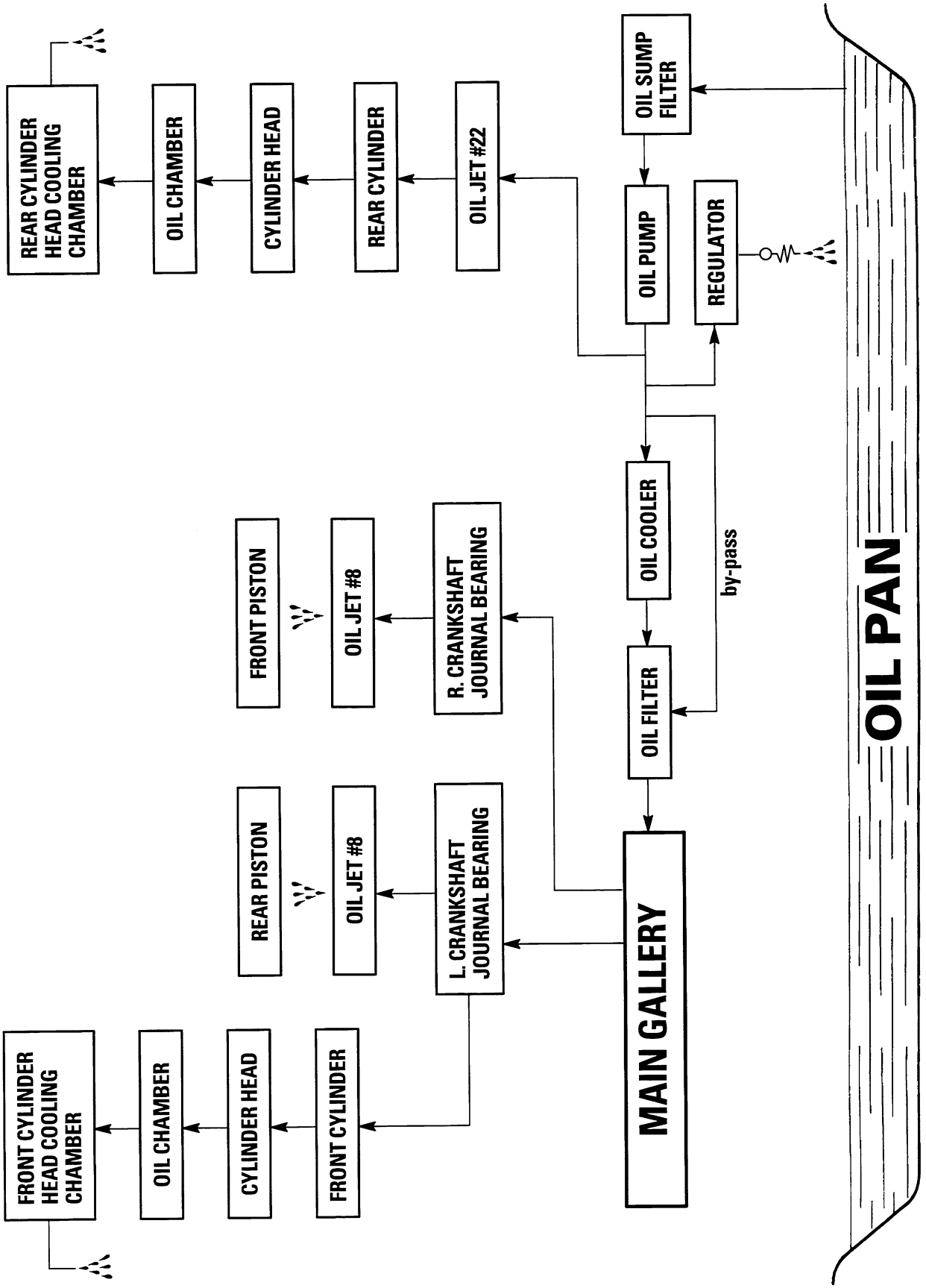

# CYLINDER HEAD COOLING SYSTEM

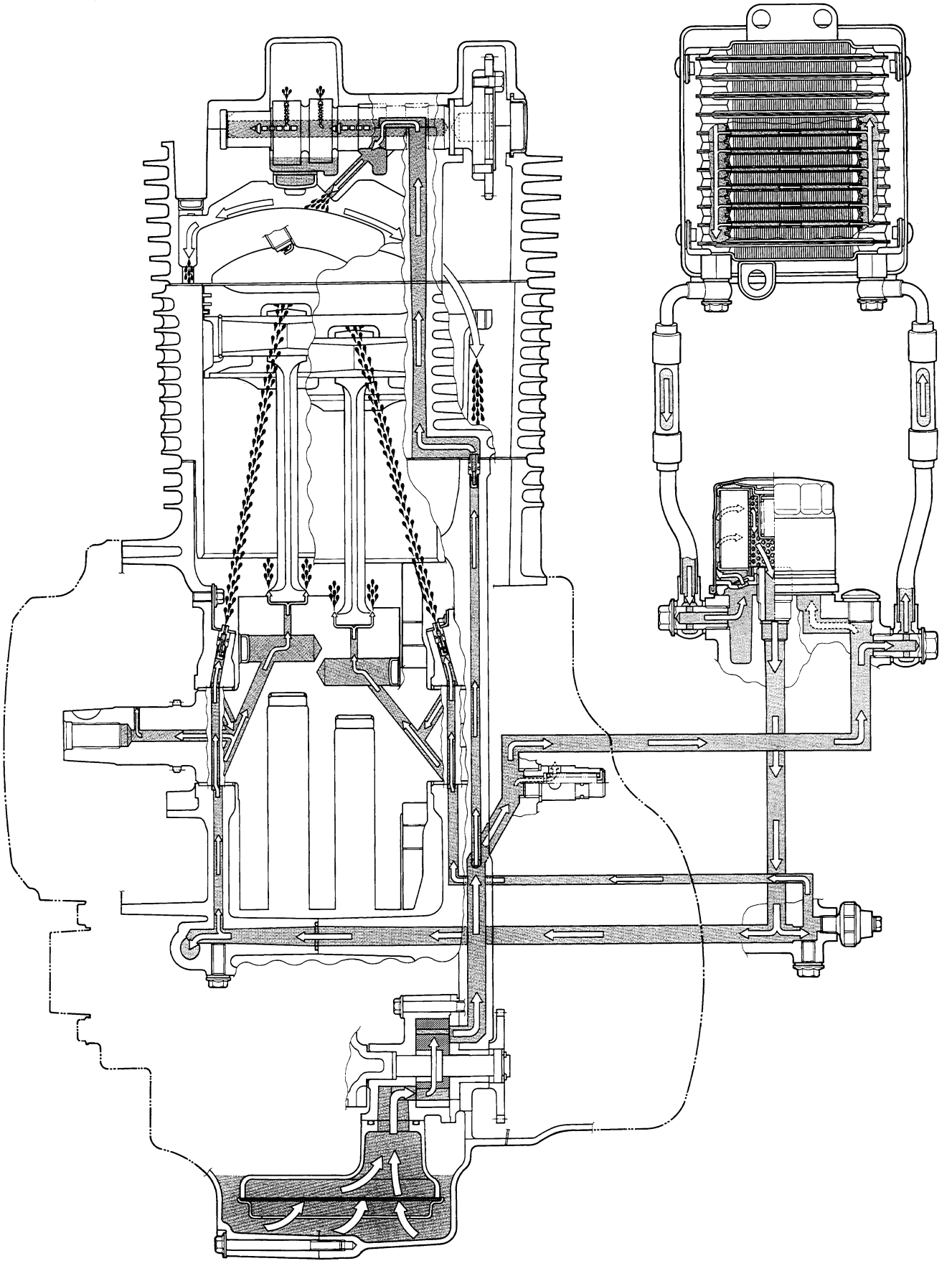

# SHAFT DRIVE

CONTENTS


SHAFT DRIVE ..... 4- 1
CONSTRUCTION ..... 4- 1
SECONDARY BEVEL GEARS ..... 4- 2
CONSTRUCTION ..... 4- 2
SECONDARY DRIVE BEVEL GEAR REMOVAL ..... 4- 4
SECONDARY DRIVE BEVEL GEAR DISASSEMBLY ..... 4- 4
SECONDARY DRIVEN BEVEL GEAR REMOVAL ..... 4- 5
INSPECTION ..... 4- 6
SECONDARY GEAR SHIMS ADJUSTMENT ..... 4- 6
SECONDARY DRIVEN BEVEL GEAR INSTALLATION ..... 4-10
SECONDARY DRIVE BEVEL GEAR REASSEMBLY ..... 4-11
SECONDARY DRIVE BEVEL GEAR INSTALLATION ..... 4-11
FINAL BEVEL GEARS ..... 4-12
CONSTRUCTION ..... 4-12
FINAL GEAR CASE BREATHER CIRCUIT ..... 4-14
FINAL GEAR CASE REMOVAL ..... 4-15
FINAL GEAR CASE DISASSEMBLY ..... 4-15
INSPECTION ..... 4-19
FINAL GEAR SHIMS ADJUSTMENT ..... 4-20
FINAL GEAR CASE REASSEMBLY ..... 4-23
FINAL GEAR CASE INSTALLATION ..... 4-27

# SHAFT DRIVE

## CONSTRUCTION

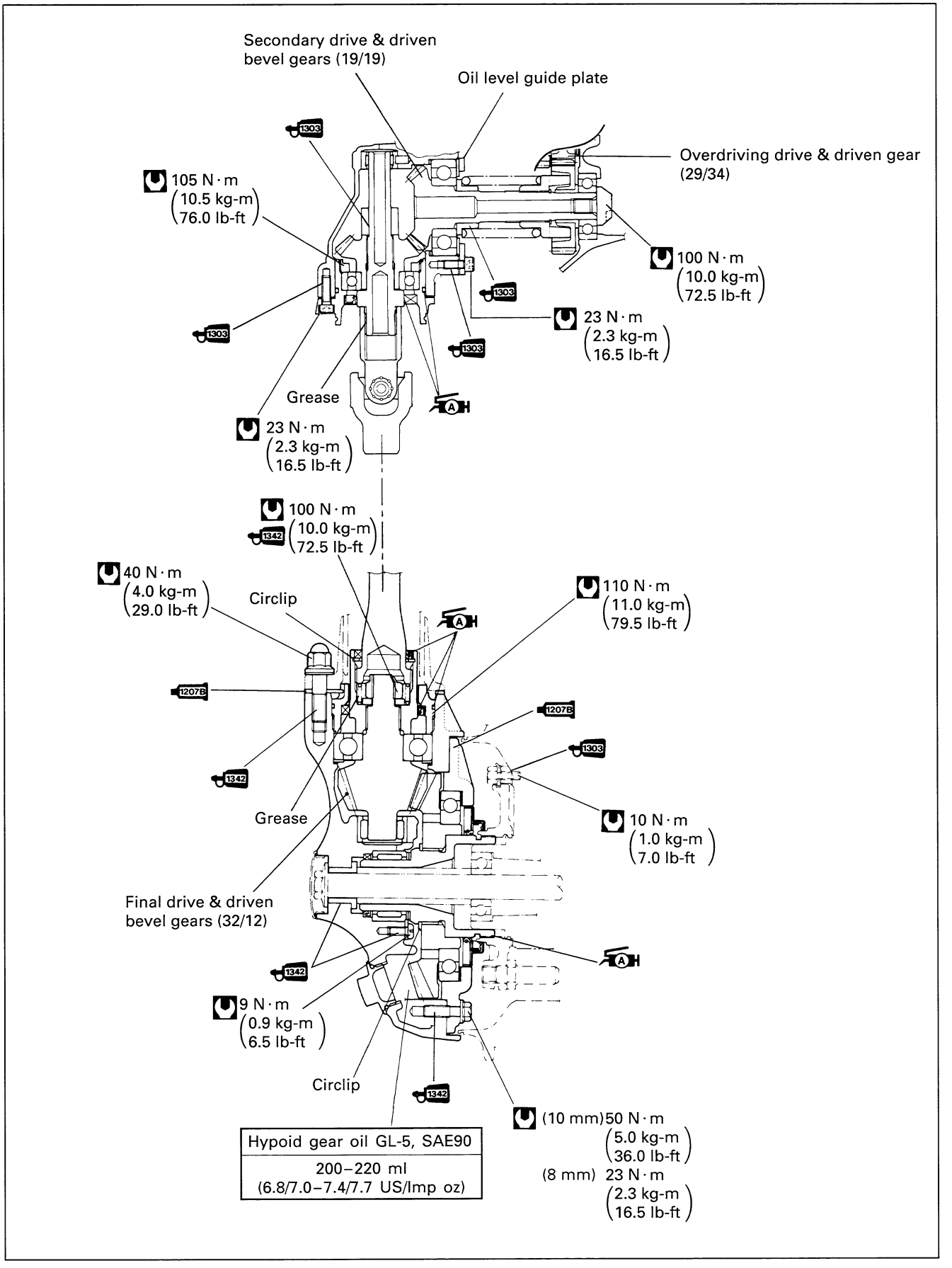

# SECONDARY BEVEL GEARS

## CONSTRUCTION

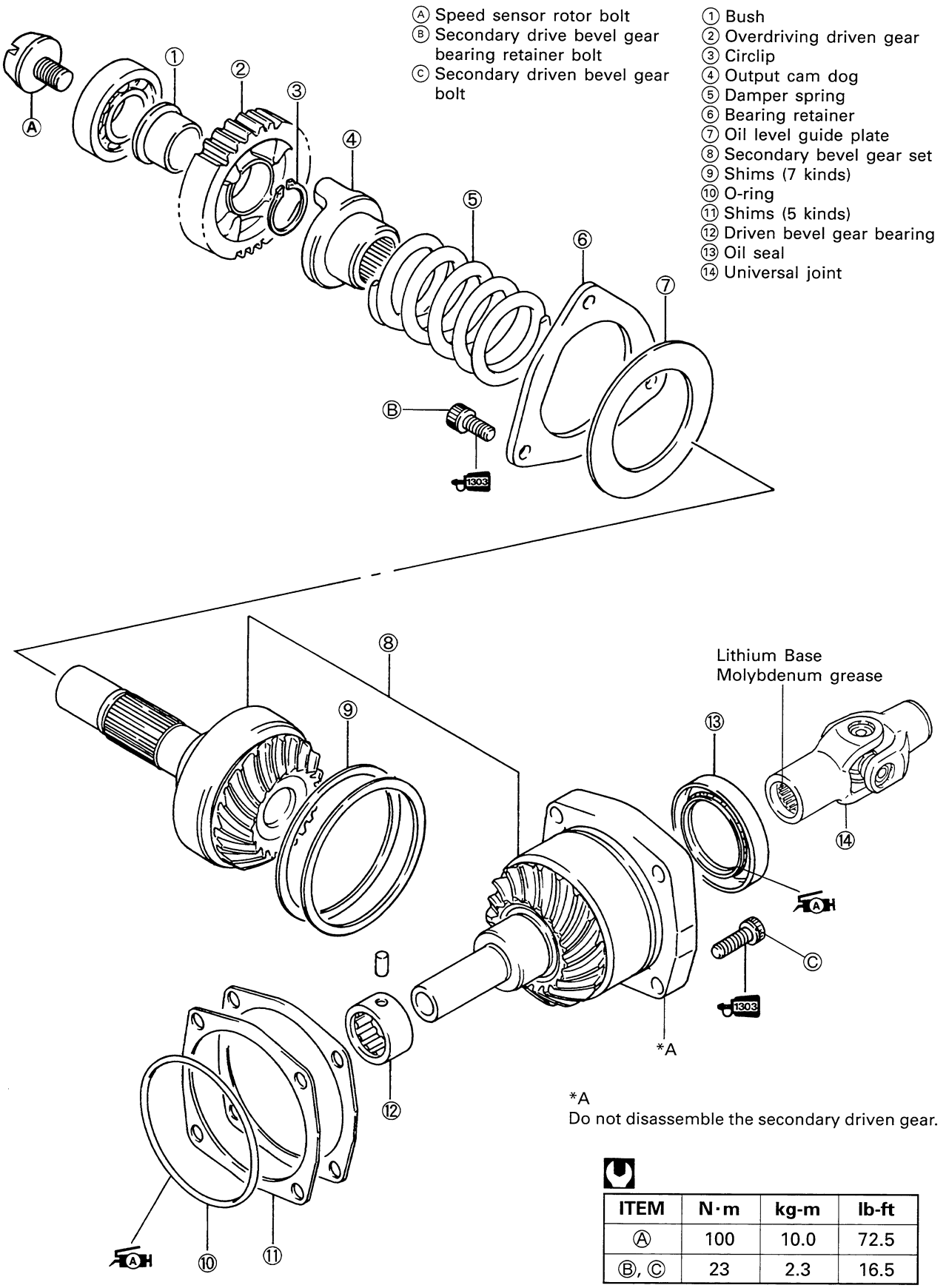


*A
Do not disassemble the secondary driven gear.

| ITEM | N·m | kg-m | lb-ft |
|---|---|---|---|
| Ⓐ | 100 | 10.0 | 72.5 |
| Ⓑ, Ⓒ | 23 | 2.3 | 16.5 |

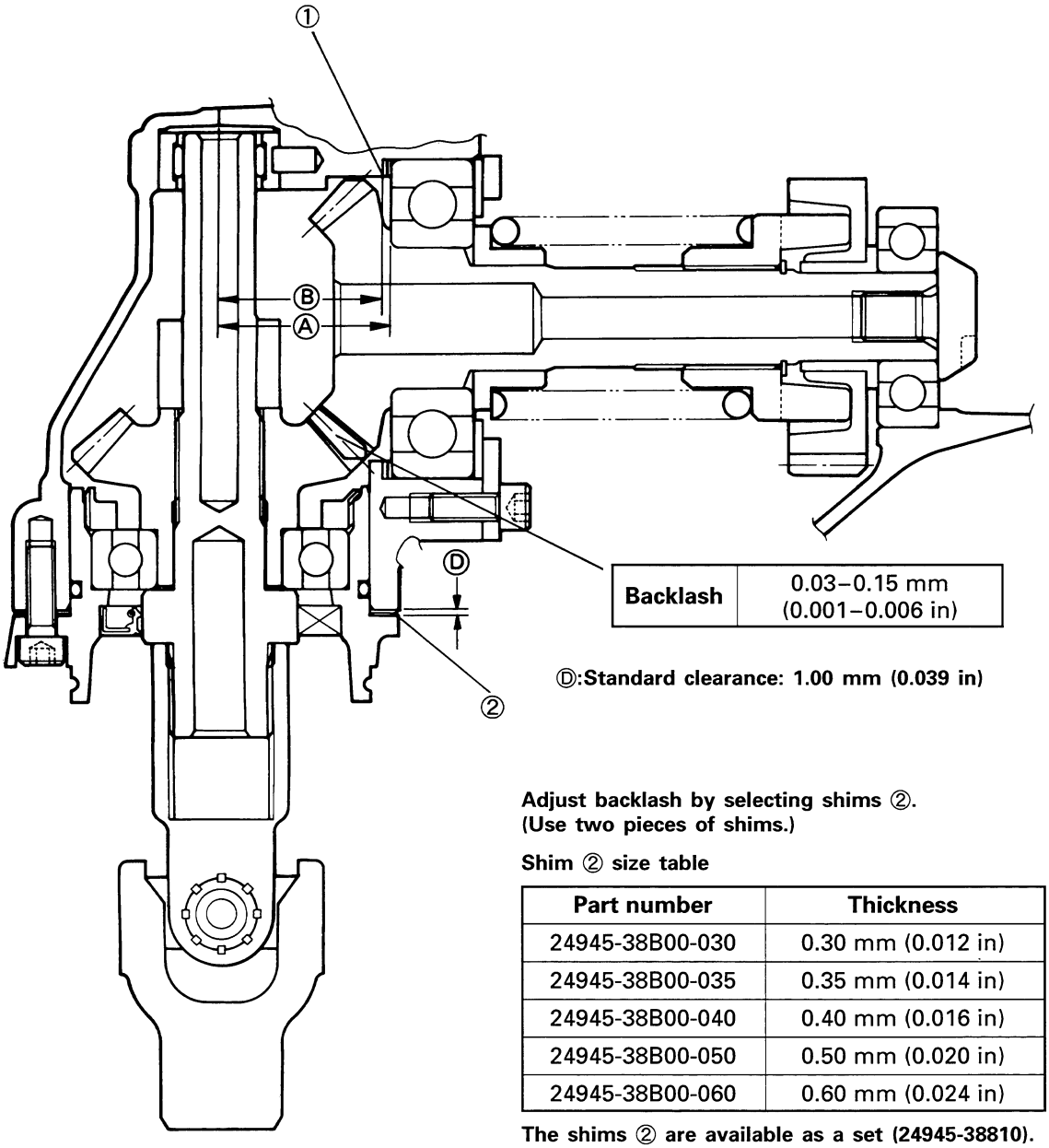


| Backlash | 0.03–0.15 mm (0.001–0.006 in) |
|---|---|

**Ⓓ:Standard clearance: 1.00 mm (0.039 in)**

**Adjust backlash by selecting shims ②.**
**(Use two pieces of shims.)**

**Shim ② size table**

| Part number | Thickness |
|---|---|
| 24945-38B00-030 | 0.30 mm (0.012 in) |
| 24945-38B00-035 | 0.35 mm (0.014 in) |
| 24945-38B00-040 | 0.40 mm (0.016 in) |
| 24945-38B00-050 | 0.50 mm (0.020 in) |
| 24945-38B00-060 | 0.60 mm (0.024 in) |

**The shims ② are available as a set (24945-38810).**

Ⓐ – Ⓑ – 0.1 = Ⓒ
(0.004)

Ⓐ:48mm (1.89 in)
Ⓑ:Measured distance
Ⓒ:Correct shim thickness
(Use two pieces of shims ①.)

**Shim ① size table**

| Part number | Thickness |
|---|---|
| 24935-38B00-110 | 1.10 mm (0.043 in) |
| 24935-38B00-115 | 1.15 mm (0.045 in) |
| 24935-38B00-120 | 1.20 mm (0.047 in) |
| 24935-38B00-125 | 1.25 mm (0.049 in) |
| 24935-38B00-130 | 1.30 mm (0.051 in) |
| 24935-38B00-135 | 1.35 mm (0.053 in) |
| 24935-38B00-140 | 1.40 mm (0.055 in) |

**The shims ① are available as a set (24935-38820).**

## SECONDARY DRIVE BEVEL GEAR REMOVAL

The crankcase must be separated to service the secondary drive bevel gear. The secondary drive bevel gear service requires engine removal and disassembly. Refer to the engine removal and the engine disassembly sections for secondary drive bevel gear assembly removal.

***ENGINE REMOVAL ..... See pp. 3-2 to -10.**
***ENGINE DISASSEMBLY ..... See pp. 3-16 to -30.**

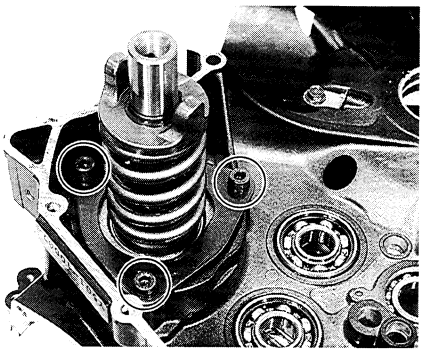

## SECONDARY DRIVE BEVEL GEAR DISASSEMBLY

- Compress the damper spring with a vice, and remove the circlip using the special tool.

**TOOL 09900-06107: Snap ring pliers**

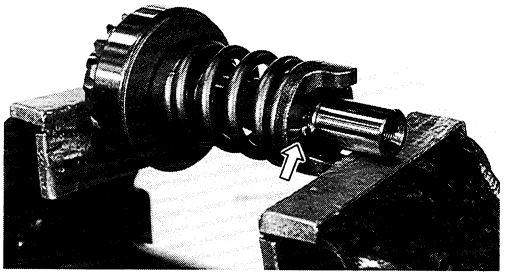

- Remove the cam dog ① and damper spring ②.

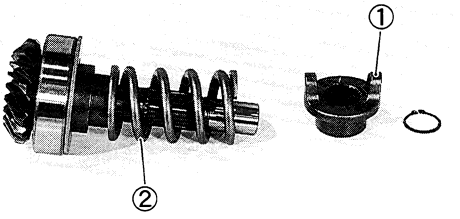


**⚠ CAUTION**

**Do not attempt to remove the secondary drive bevel gear bearing.**
**The secondary drive bevel gear and its bearing are available only as an assembly.**

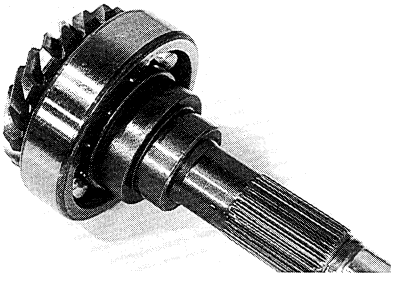

# SECONDARY DRIVEN BEVEL GEAR REMOVAL

The following components must be removed in the described order before removing the secondary driven bevel gear.

*NOTE:*
*Refer to the following pages for the details of each step.*

**Remove**

- Rear wheel (See p. 6-29.)
- Swingarm (See pp. 6-35 and -36.)

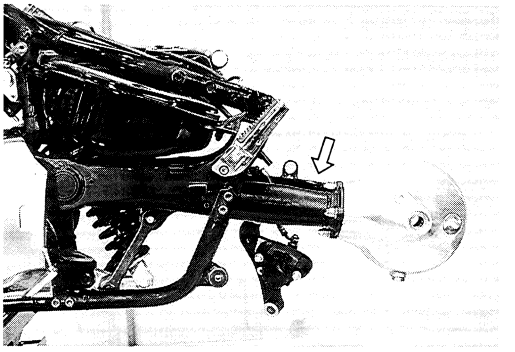

- Secondary gear case cover (See p. 3-7.)
- Boot
- Universal joint
- Secondary gear case (See pp. 3-24 and -25.)

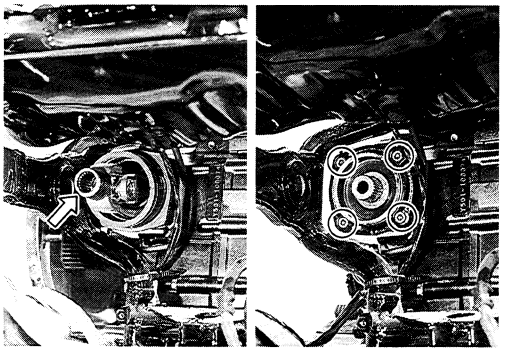

- Secondary driven bevel gear (See p. 3-25.)

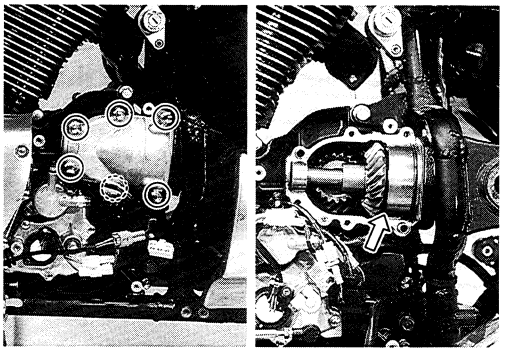

**⚠ CAUTION**

**Do not attempt to disassemble the secondary driven bevel gear assembly.**
**It is available only as an assembly.**

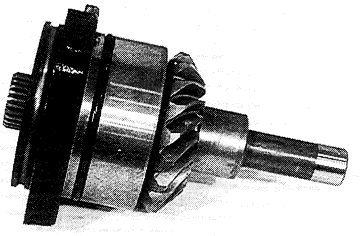

## INSPECTION

Inspect the removed parts for the following abnormalities.

* Drive and driven bevel gears damage or wear
* Improper tooth contact
* Abnormal noise of bearings
* Bearing damage or wear
* Oil seal damage or wear
* Output cam dog wear or damage
* Universal joint spline damage or wear

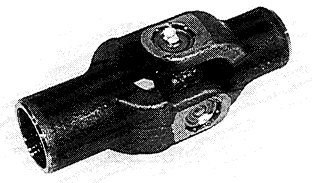

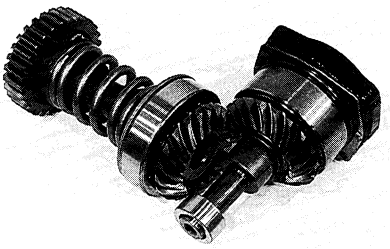

### DAMPER SPRING

Measure the free length of the damper spring. If the length is shorter than the service limit, replace the spring with a new one.

**Service limit**

**Damper spring free length: 88.4 mm (3.48 in)**

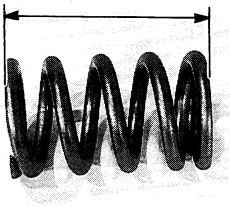

## SECONDARY GEAR SHIMS ADJUSTMENT

### BACKLASH

- When replacing the crankcases with new ones, measure the height Ⓑ with a surface plate and a vernier calipers. As the height Ⓐ is designed with 48.00 mm (1.890 in), calculate the difference Ⓒ between Ⓐ–Ⓑ.

Ⓐ – Ⓑ – 0.1 (0.004) = Ⓒ  Ⓐ: 48.00 mm (1.890 in)

- Select the two pieces of shims that the total thickness equals Ⓒ.

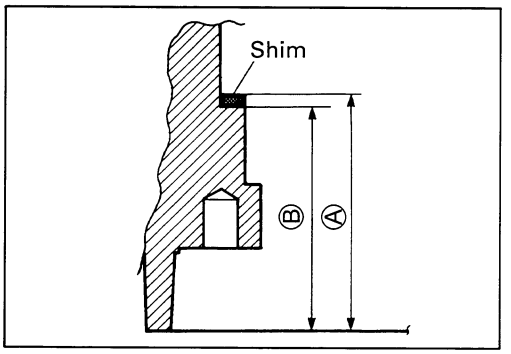


**Shim (Drive bevel gear side) specifications**

| Part No. | Thickness |
|---|---|
| 24935-38B00-110 | 1.10 mm (0.043 in) |
| 24935-38B00-115 | 1.15 mm (0.045 in) |
| 24935-38B00-120 | 1.20 mm (0.047 in) |
| 24935-38B00-125 | 1.25 mm (0.049 in) |
| 24935-38B00-130 | 1.30 mm (0.051 in) |
| 24935-38B00-135 | 1.35 mm (0.053 in) |
| 24935-38B00-140 | 1.40 mm (0.055 in) |

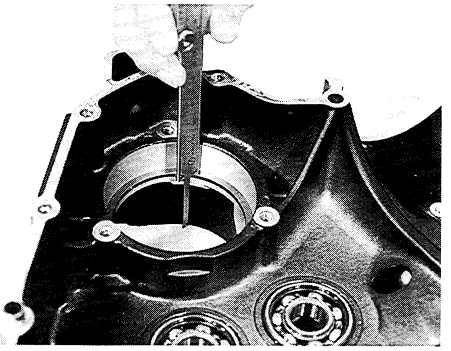

*NOTE:*

*The shims (drive bevel gear side) are available as a set (24935-38820).*

- Install the selected shims to the secondary drive bevel gear assembly and tighten the bolts ① to the specified torque.

**Secondary drive bevel gear bearing retainer bolt: 23 N·m (2.3 kg-m, 16.5 lb-ft)**

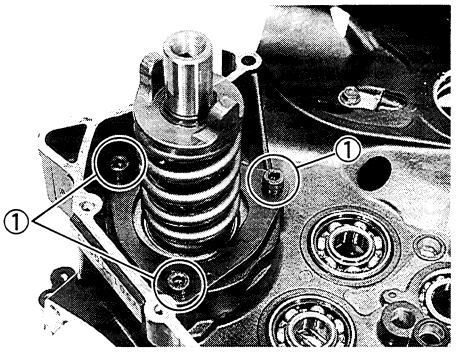


*NOTE:*
*When replacing the secondary drive and driven bevel gears, install the removed shims to the secondary drive bevel gear assembly and tighten the bolts ① to the specified torque.*

- Install the secondary driven bevel gear assembly with removed shims, the driven bevel gear bearing and secondary gear case.

*NOTE:*
*Do not install the O-ring on the driven gear housing at this stage. O-ring is installed after backlash and tooth contact are correct.*

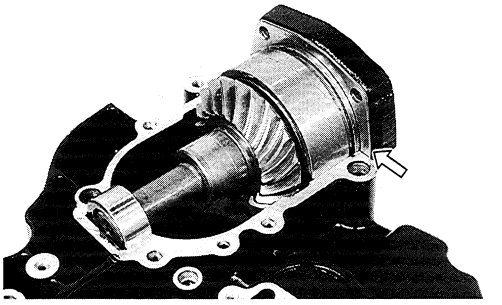

- Tighten the secondary bevel gear case bolts and secondary driven bevel gear bolts to the specified torque.

**Secondary bevel gear case bolts: 22 N·m (2.2 kg-m, 16.0 lb-ft)**
**Secondary driven bevel gear bolt: 23 N·m (2.3 kg-m, 16.5 lb-ft)**

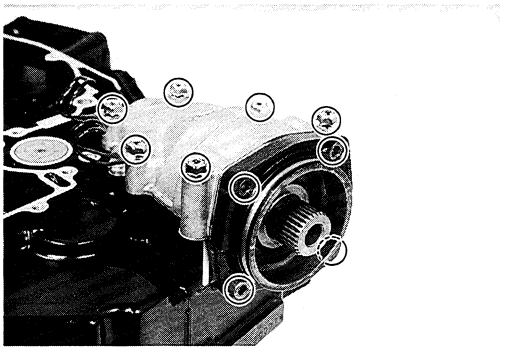

*NOTE:*
* *Hollow portion Ⓐ of the secondary driven bevel gear assembly faces inside.*
* *It is not necessary to apply SUZUKI BOND "1207B" to the matching surface at this stage.*

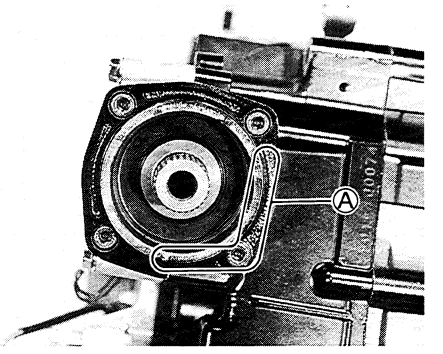


- Measure the backlash as follows.
- Set-up a dial gauge as shown in photo.

**TOOL 09900-20606: Dial gauge (1/100 mm, 10 mm)**
**09900-20701: Magnetic stand**

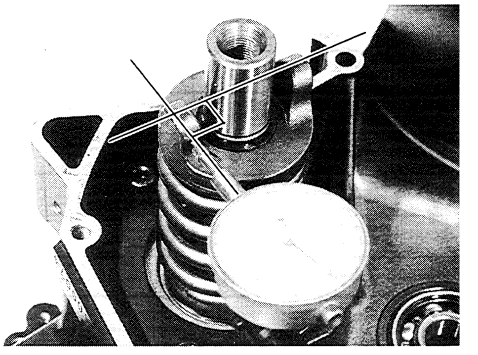

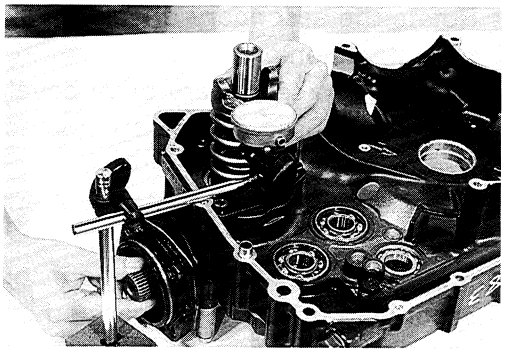

- Adjust the dial gauge so that it touches the secondary drive bevel gear cam dog; hold the driven bevel gear securely, and turn the drive bevel gear in each direction, reading the total backlash on the dial gauge.

**Standard**
**Secondary bevel gear backlash: 0.03–0.15 mm (0.001–0.006 in)**

*NOTE:*
*When measuring backlash, hold the left crankcase horizontally pull the secondary drive gear to take the bearing play out.*

- If the backlash is not within specification, the shims (Driven bevel gear side) must be changed and the backlash should be re-checked until correct.
  Refer to the chart for appropriate changes.

*NOTE:*
*When changing the shims (Driven bevel gear side), measure the thickness of old shims. Using the thickness of the old shims as a guide, adjust the backlash by referring to the chart.*

| Backlash | Shim adjustment |
|---|---|
| Under 0.03 mm (0.001 in) | Increase shim thickness |
| 0.03–0.15 mm (0.001–0.006 in) | Correct |
| Over 0.15 mm (0.006 in) | Decrease shim thickness |

**Shim (Driven bevel gear side) specifications**

| Part No. | Shim thickness |
|---|---|
| 24945-38B00-030 | 0.30 mm (0.012 in) |
| 24945-38B00-035 | 0.35 mm (0.014 in) |
| 24945-38B00-040 | 0.40 mm (0.016 in) |
| 24945-38B00-050 | 0.50 mm (0.020 in) |
| 24945-38B00-060 | 0.60 mm (0.024 in) |

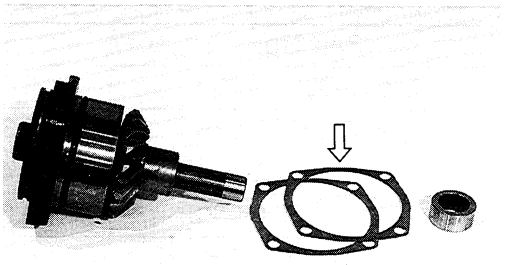

*NOTE:*
*The shims (driven bevel gear side) are available as a set (24945-38810).*

**TOOTH CONTACT**

After bringing the backlash within specification by changing the secondary driven bevel gear shims, it will be necessary to check tooth contact.

- Remove the drive bevel gear assembly from the crankcase.
- Clean and degrease the secondary drive bevel gear teeth, and apply a coating of machinist's layout dye or paste to several teeth.
- Reinstall the secondary drive bevel gear assembly, with correct shim, onto the secondary gear housing.

- Rotate the secondary driven bevel gear several turns in both directions.
- Remove the secondary drive bevel gear from the crankcase, and observe the tooth contact pattern made in the dye or paste.
- Compare the tooth contact pattern to the examples as shown in ①, ② and ③.
- If tooth contact is found to be incorrect, the shims of the secondary drive bevel gear and secondary driven bevel gear must be changed, tooth contact should be re-checked until correct.

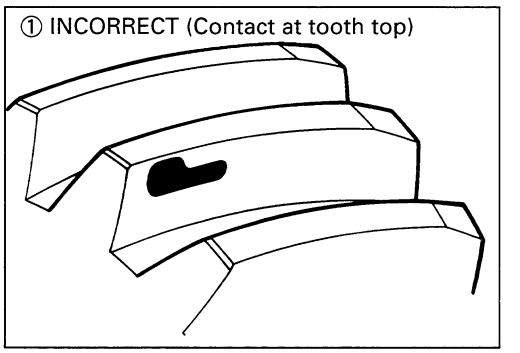


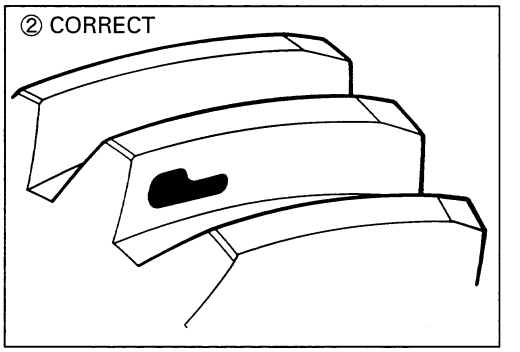


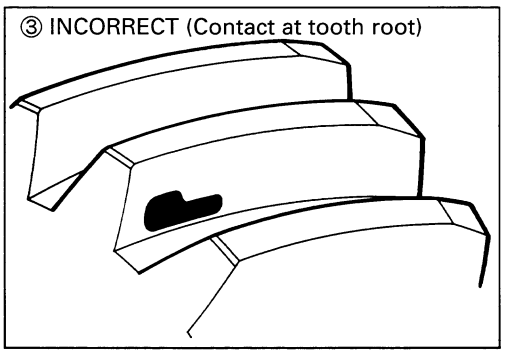


**⚠ CAUTION**

**After the tooth contact adjustment is made, the backlash must be re-checked, as it may change. Refer to the backlash checking sub-section, and readjust until both backlash and tooth contact are correct.**

| Tooth contact | Shim adjustment |
|---|---|
| Contact at tooth top ① | Decrease thickness of shims ④ or ⑤ |
| Contact at tooth root ③ | Increase thickness of shims ④ or ⑤ |

**Shim ④ (Driven bevel gear side) specifications**

| Part No. | Shim thickness |
|---|---|
| 24945-38B00-030 | 0.30 mm (0.012 in) |
| 24945-38B00-035 | 0.35 mm (0.014 in) |
| 24945-38B00-040 | 0.40 mm (0.016 in) |
| 24945-38B00-050 | 0.50 mm (0.020 in) |
| 24945-38B00-060 | 0.60 mm (0.024 in) |

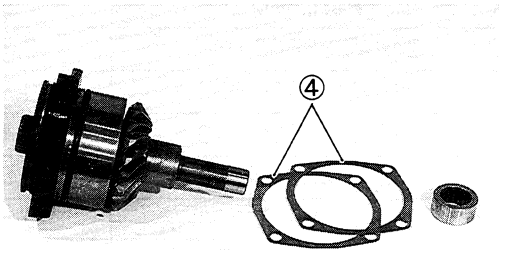


*NOTE:*
*The shims ④ are available as a set (24945-38810).*

**Shim ⑤ (Drive bevel gear side) specifications**

| Part No. | Shim thickness |
|---|---|
| 24935-38B00-110 | 1.10 mm (0.043 in) |
| 24935-38B00-115 | 1.15 mm (0.045 in) |
| 24935-38B00-120 | 1.20 mm (0.047 in) |
| 24935-38B00-125 | 1.25 mm (0.049 in) |
| 24935-38B00-130 | 1.30 mm (0.051 in) |
| 24935-38B00-135 | 1.35 mm (0.053 in) |
| 24935-38B00-140 | 1.40 mm (0.055 in) |

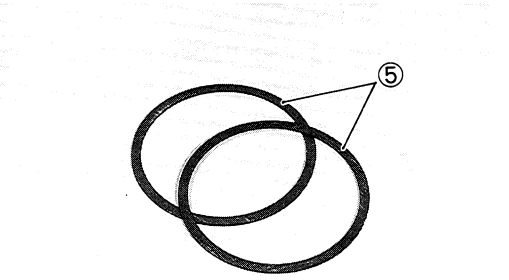


*NOTE:*
*The shims ⑤ are available as a set (24935-38820).*

## SECONDARY DRIVEN BEVEL GEAR INSTALLATION

Installation is in the reverse order of removal.

*NOTE:*
*Refer to the following pages for the details of each step.*

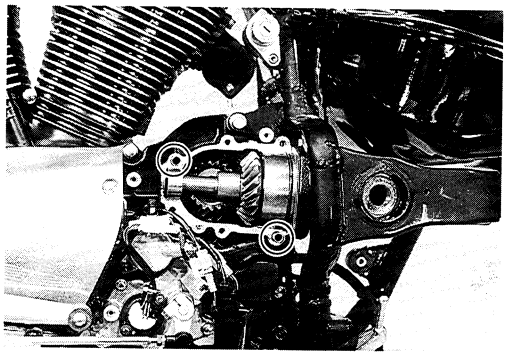

**⚠ CAUTION**

**When replacing the secondary driven bevel gear, replace the secondary drive bevel gear also, as a set and adjust the backlash and tooth contact.**

**Install:**

- Secondary driven bevel gear assembly (See p. 3-40.)
- Secondary bevel gear case (See pp. 3-41 and -42.)

*NOTE:*
*After installing the driven bevel gear, make sure that both gears turn smoothly without any hitch or bearing noise.*

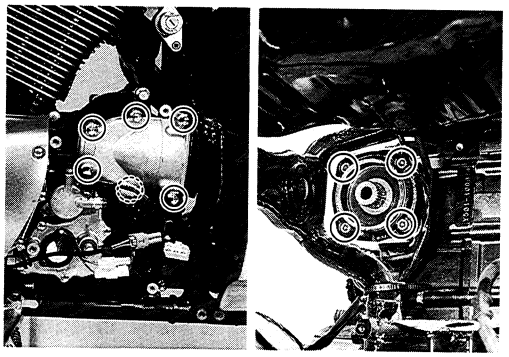

- Secondary gear case cover
- Universal joint
- Boot (See p. 6-40.)

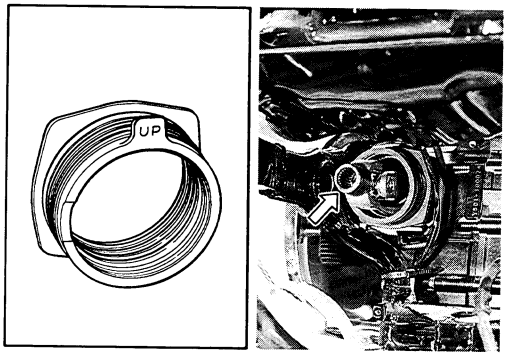


- Swingarm (See pp. 6-40 to -42.)

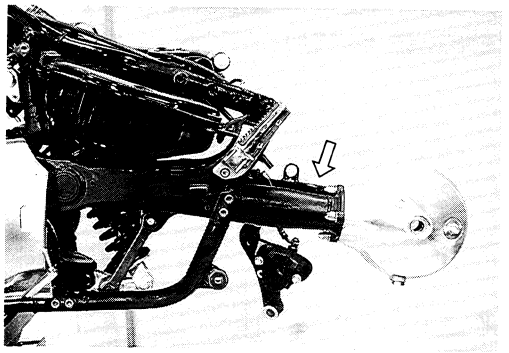

- Rear wheel (See p. 6-32.)

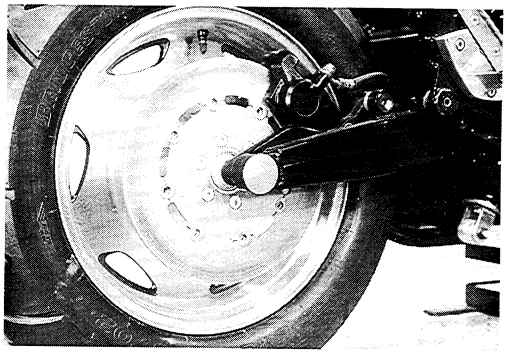

Adjust the following item to specification

| | Page |
|---|---|
| * Engine oil | 2-6 |

## SECONDARY DRIVE BEVEL GEAR REASSEMBLY

Reassemble the secondary drive bevel gear in the reverse order of disassembly. Pay attention to the following points.

- When installing a new circlip, pay attention to the direction of the circlip. Fit the circlip to the side where the thrust is, as shown in the illustration. The rounded side should be against the output cam dog surface.

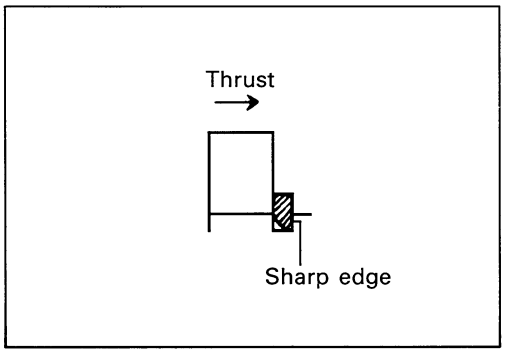


**⚠ CAUTION**

- **Never reuse a circlip. After a circlip has been removed from a shaft, it should be discarded and a new circlip must be installed.**
- **When installing a new circlip, do not expand the end gap larger than required to slip the circlip over the shaft.**
- **After installing a circlip, make sure that it is completely seated in its groove and securely fitted.**

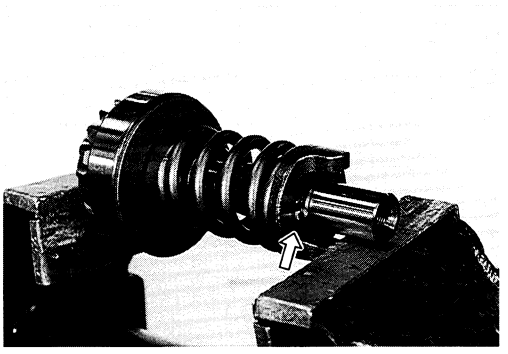

## SECONDARY DRIVE BEVEL GEAR INSTALLATION

Refer to the engine reassembly and the engine installation sections.

***ENGINE REASSEMBLY ..... See pp. 3-31 to -60.**
***ENGINE INSTALLATION ..... See pp. 3-11 to -15.**

# FINAL BEVEL GEARS

## CONSTRUCTION

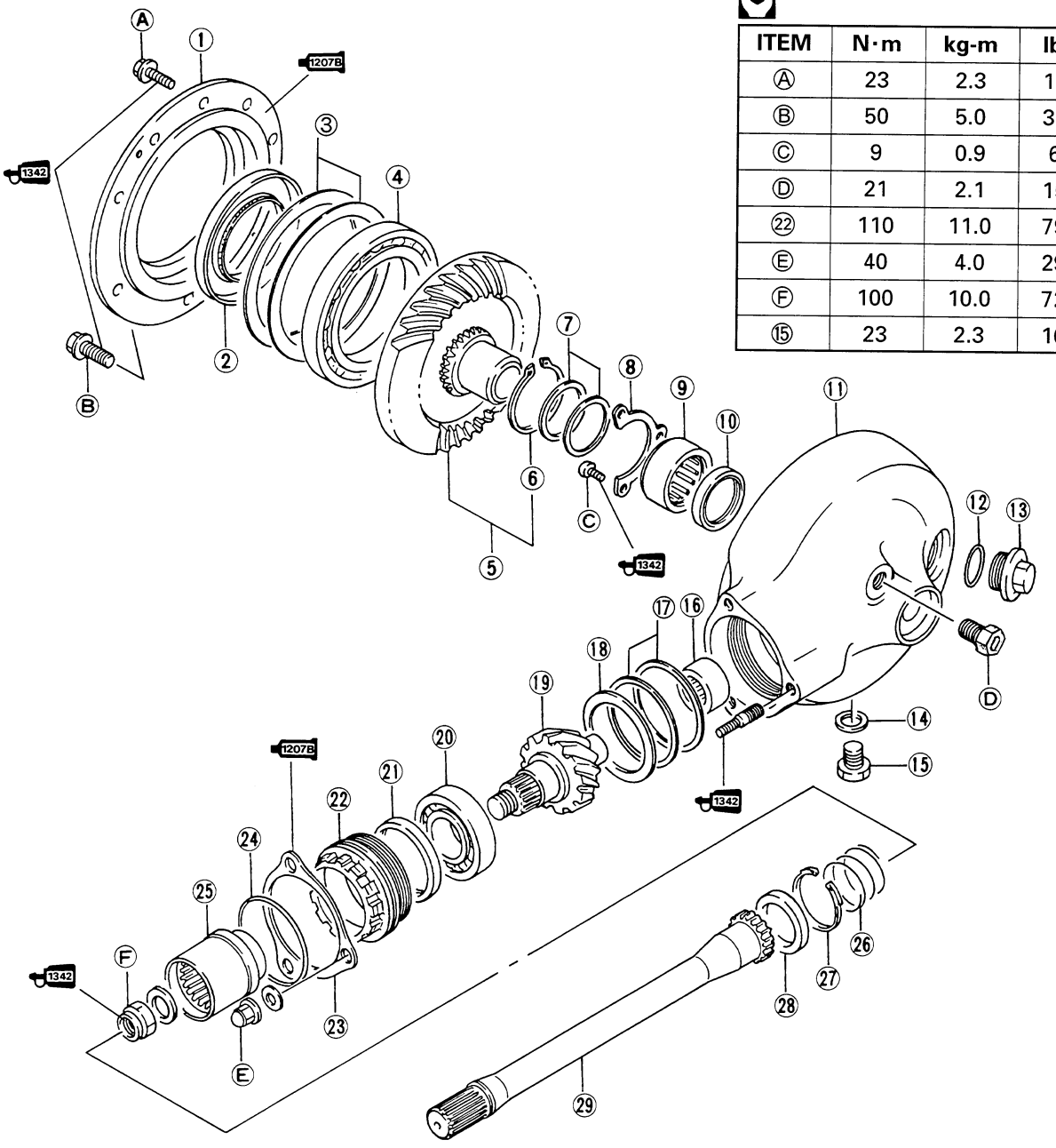


| ITEM | N·m | kg-m | lb-ft |
|---|---|---|---|
| Ⓐ | 23 | 2.3 | 16.5 |
| Ⓑ | 50 | 5.0 | 36.0 |
| Ⓒ | 9 | 0.9 | 6.5 |
| Ⓓ | 21 | 2.1 | 15.0 |
| ㉒ | 110 | 11.0 | 79.5 |
| Ⓔ | 40 | 4.0 | 29.0 |
| Ⓕ | 100 | 10.0 | 72.5 |
| ⑮ | 23 | 2.3 | 16.5 |

Ⓐ Final gear case bolt (8 mm)
Ⓑ Final gear case bolt (10 mm)
Ⓒ Final driven bevel gear bearing retainer screw
Ⓓ Plug
Ⓔ Final gear case mounting nut
Ⓕ Final driven bevel gear coupling nut

① Final gear bearing case
② Oil seal
③ Shims (4 kinds)
④ Final driven gear bearing
⑤ Final driven bevel gear
⑥ Circlip
⑦ Shims (9 kinds)
⑧ Bearing retainer
⑨ Final driven gear bearing
⑩ Oil seal
⑪ Final gear case
⑫ O-ring
⑬ Oil filler plug
⑭ Gasket
⑮ Oil drain plug

⑯ Final drive gear bearing
⑰ Shims (5 kinds)
⑱ Washer
⑲ Final drive bevel gear
⑳ Final drive bevel gear bearing
㉑ Oil seal
㉒ Bearing stopper
㉓ Stopper plate (2 kinds)
㉔ O-ring
㉕ Final drive coupling
㉖ Spring
㉗ Circlip
㉘ Oil seal
㉙ Propeller shaft

**Shim ③–Gear case cover clearance: 0.10 mm (0.004 in)**

**Shim ③ size table**

| Part number | Thickness |
|---|---|
| 27327-38B00-035 | 0.35 mm (0.014 in) |
| 27327-38B00-040 | 0.40 mm (0.016 in) |
| 27327-38B00-050 | 0.50 mm (0.020 in) |
| 27327-38B00-060 | 0.60 mm (0.024 in) |

**The shims ③ are available as a set (27327-38810).**

**Standard clearance Ⓐ: 1 mm (0.039 in)**

**Shim ① size table**

| Part number | Thickness |
|---|---|
| 27445-24A01-030 | 0.30 mm (0.012 in) |
| 27445-24A01-035 | 0.35 mm (0.014 in) |
| 27445-24A01-040 | 0.40 mm (0.016 in) |
| 27445-24A01-050 | 0.50 mm (0.020 in) |
| 27445-24A01-060 | 0.60 mm (0.024 in) |

**The shims ① are available as a set (27445-24810).**

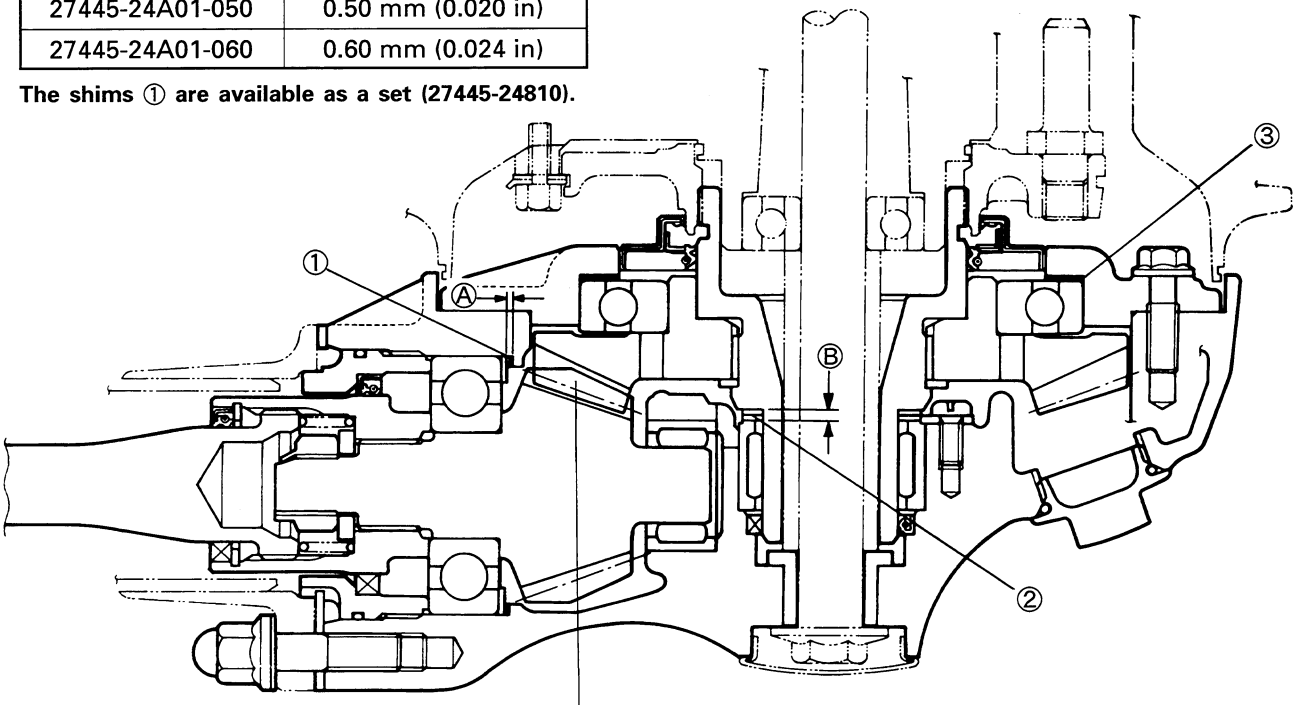


| | |
|---|---|
| **Backlash** | 0.03–0.64 mm (0.001–0.025 in) |

**Standard clearance Ⓑ: 2.8 mm (0.110 in)**

**Shim ② size table**

| Part number | Thickness |
|---|---|
| 09160-35008 | 0.95 mm (0.026 in) |
| 09181-35141 | 1.05 mm (0.041 in) |
| 09181-35144 | 1.10 mm (0.043 in) |
| 09181-35148 | 1.20 mm (0.047 in) |
| 09181-35151 | 1.25 mm (0.049 in) |
| 27326-45104 | 1.35 mm (0.053 in) |
| 09181-35154 | 1.40 mm (0.055 in) |
| 27326-45100-145 | 1.45 mm (0.057 in) |
| 09181-35156 | 1.50 mm (0.059 in) |

**The shims ② (1.05–1.50) are available as a set (27326-45811).**

# FINAL GEAR CASE BREATHER CIRCUIT

## BREATHER CIRCUIT

The final gear case breather circuit (passage) consists of the final gear case and final gear bearing case. Air/oil mixed gas, flows through the following routes.

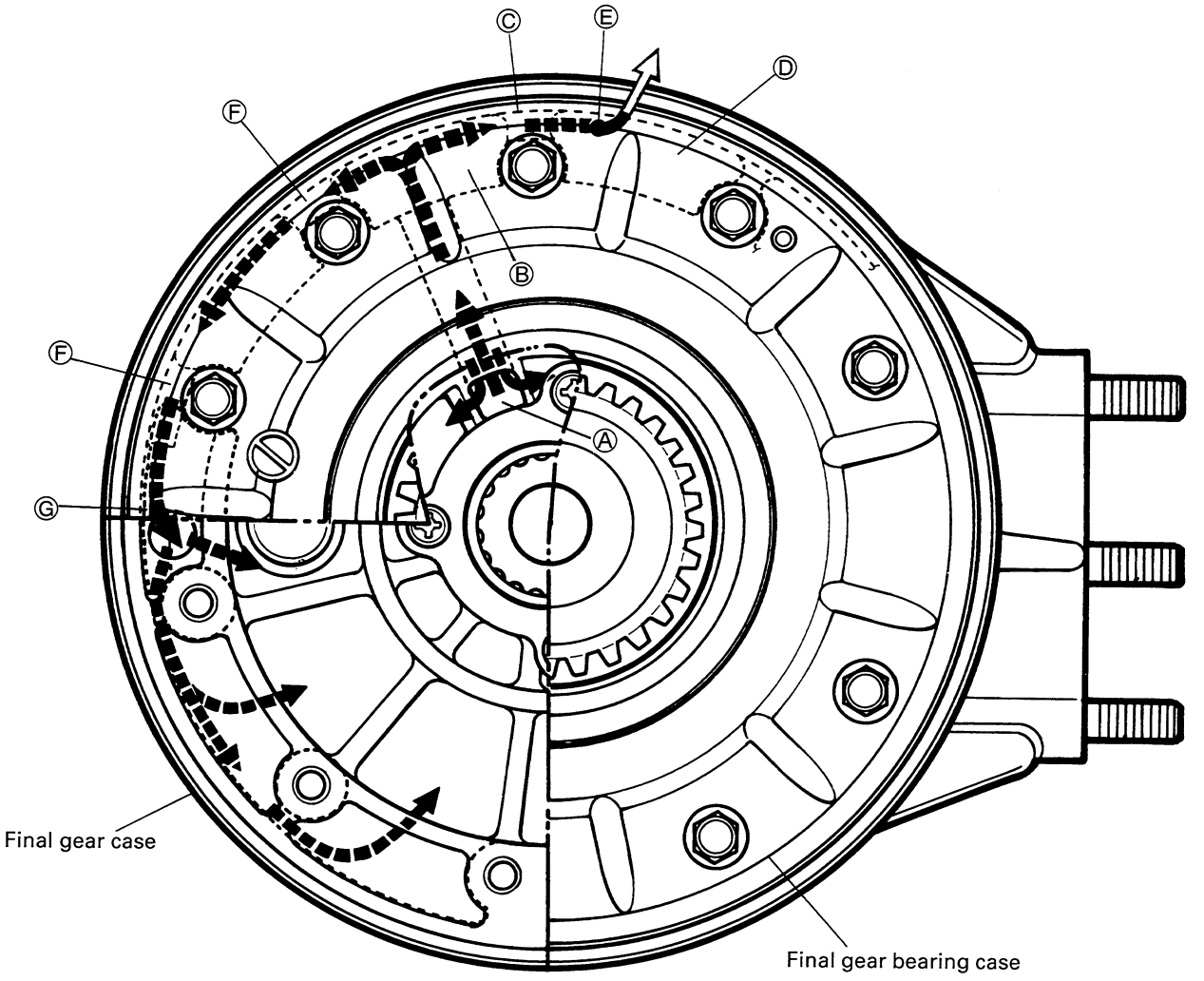


### AIR PASSAGE

When the air pressure in the final gear case becomes higher than atmospheric pressure, both air and oil flow in the following passages.

Air flows from hole Ⓐ to chamber Ⓑ and passes through the hole Ⓒ and chamber Ⓓ to the atmosphere through the breather hole Ⓔ.

### OIL PASSAGE

When the final gear case pressure rises abruptly or when the gear case oil level changes during cornering, the gear oil may sometime flow out into the air passage.

- In this case, the gear oil which has traveled into hole Ⓐ goes into chamber Ⓑ, where the oil is separated from the air.
- The air flows through hole Ⓒ and chamber Ⓓ, and goes out through the breather hole Ⓔ.
- The gear oil, however, flows through the passage Ⓕ and returns to the gear case from gear oil return port Ⓖ.

## FINAL GEAR CASE REMOVAL

After draining final gear oil, the following components must be removed in the described order before removing the final gear case.

*NOTE:*
*Refer to the following pages for the details of each step.*

**Drain:**
- Final gear oil (See p. 2-14.)

**Remove:**
- Rear wheel (See p. 6-29.)

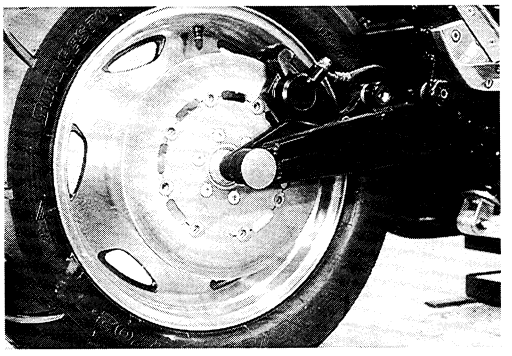

- Final gear case

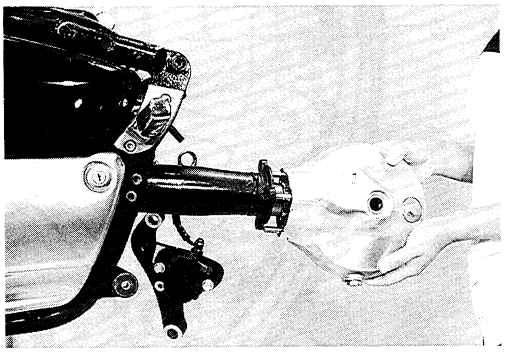

## FINAL GEAR CASE DISASSEMBLY

- Remove the plate.
- Remove the oil seal.

**⚠ CAUTION**

**The removed oil seal must be replaced with a new one.**

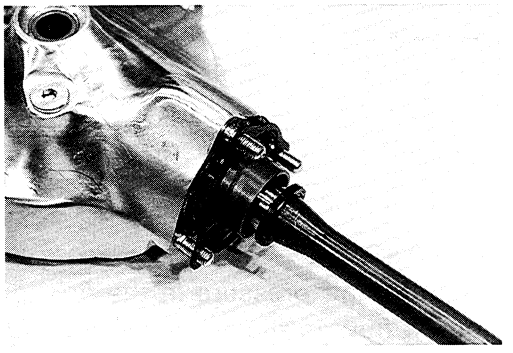

- Remove the circlip by using the special tool and take off the propeller shaft and spring.

**TOOL 09900-06108: Snap ring pliers**

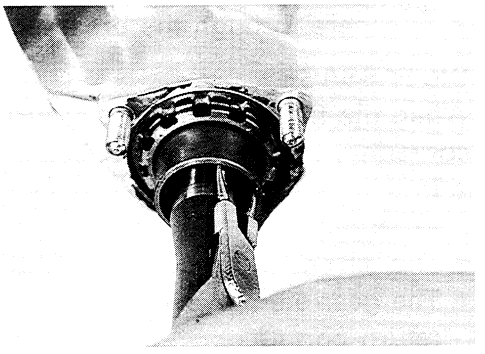

① Spring
② Propeller shaft
③ Circlip

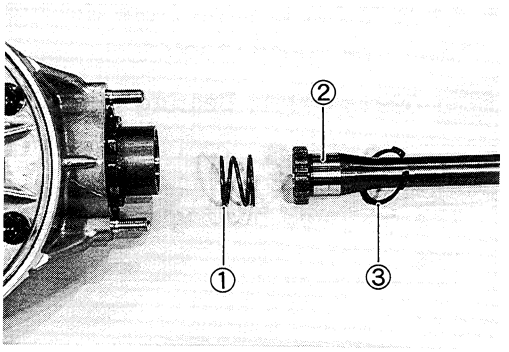


- Using a chisel, unlock the nut.
- Remove the final drive bevel gear coupling nut by using the special tool.

**TOOL 09924-64510: Final drive gear coupling holder**

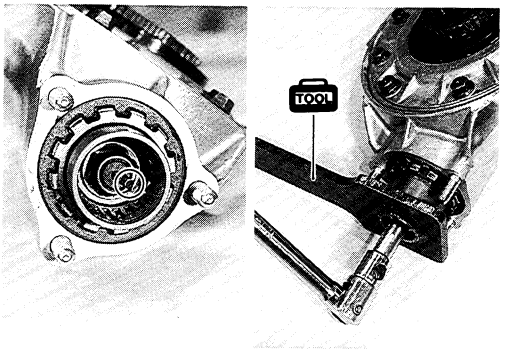


- Remove the washer and the final drive coupling.

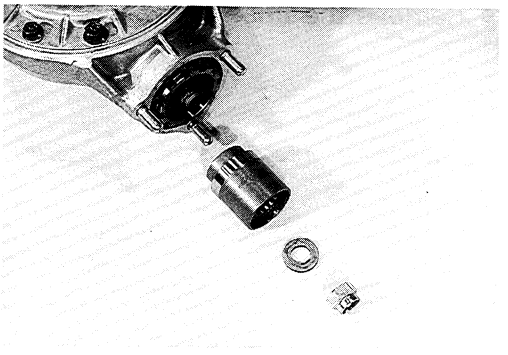

- Remove the bearing stopper by using the special tool.

**TOOL 09924-62410: Final drive gear bearing holder wrench**

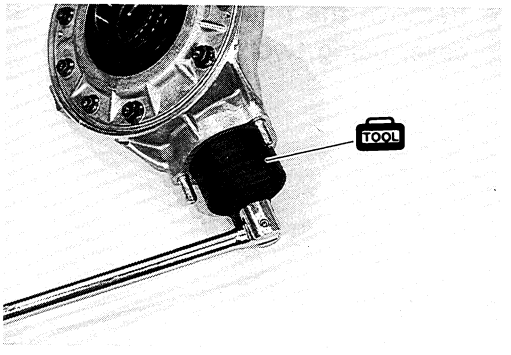


- Remove the final drive bevel gear and shims.

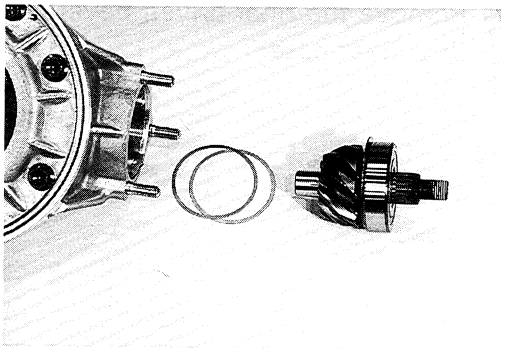

- Remove the bearing from the final drive bevel gear by using the special tool.

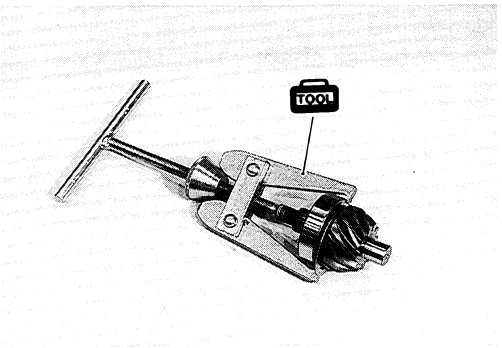


**TOOL 09913-60910: Bearing puller**

**⚠ CAUTION**

**The removed bearing must be replaced with a new one.**

*NOTE:*
*If no abnormal noise, the bearing removal is not necessary.*

① Final drive bevel gear
② Washer
③ Bearing
④ Inner races

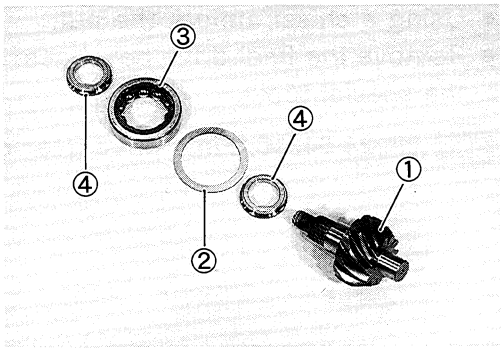


- Remove the final gear bearing case bolts.

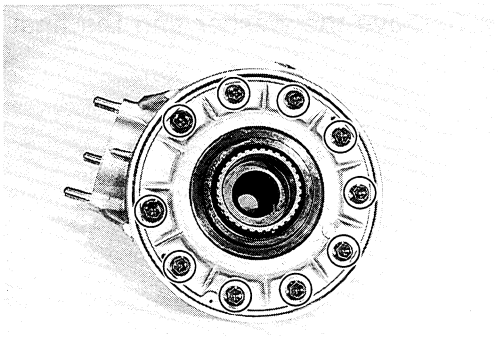

- Remove the final gear bearing case from the final gear case, using two 5 mm screws.

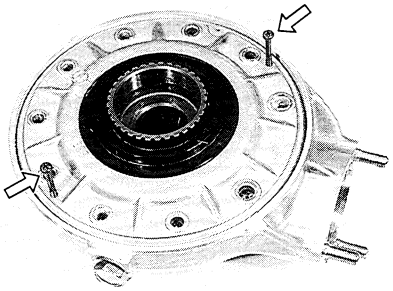

- Remove the final driven bevel gear and shims from the final gear case.

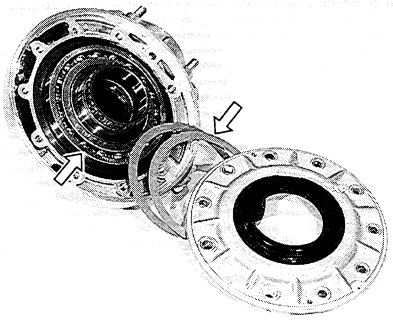

- Remove the final driven bevel gear shims.

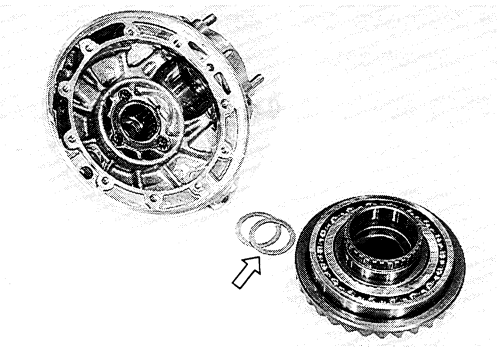

- Using the snap ring pliers, remove the circlip from the final driven bevel gear shaft.

**TOOL 09900-06107: Snap ring pliers**

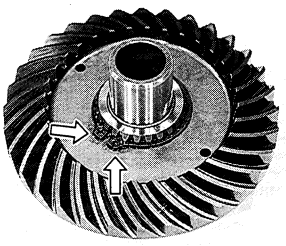

- Using two bolts or suitable drift, remove the final driven bevel gear bearing from the bevel gear.

*NOTE:*
*If no abnormal noise the bearing removal is not necessary.*

**▲ CAUTION**

**The removed bearing must be replaced with a new one.**

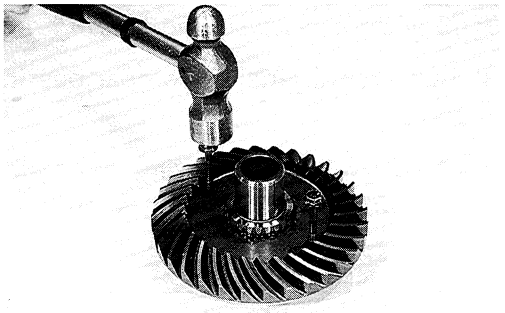

- Remove the gear from the shaft by using the special tool.

**TOOL 09924-74570: Final driven gear remover/installer**

*NOTE:*
*The final driven bevel gear and the shaft are available as a set.*

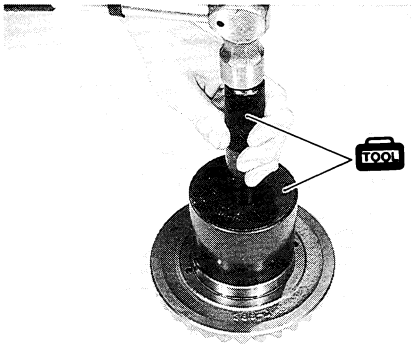


- Remove the oil seal from the final gear bearing case.

*NOTE:*
*If no oil leakage, the oil seal removal is not necessary.*

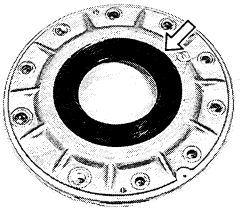

- Remove the bearing retainer screws, using an impact driver set.

**TOOL 09900-09004: Impact driver set**

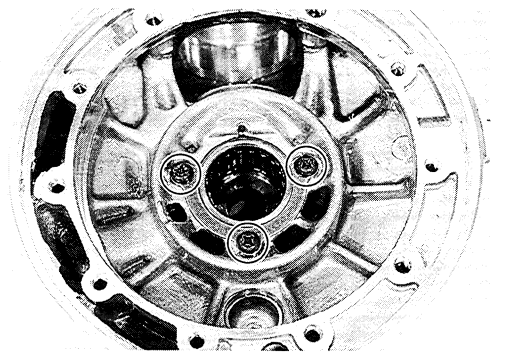

- Remove the final driven gear bearing and oil seal by using the special tools.

**TOOL 09941-64511: Bearing remover**
**09930-30102: Sliding shaft**

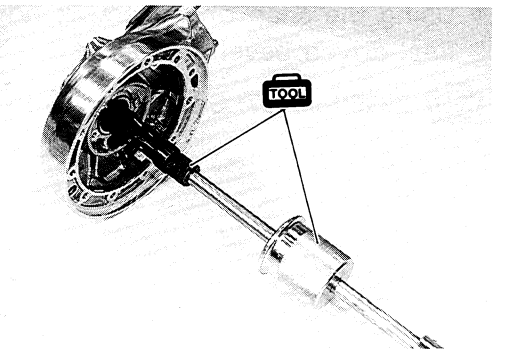


**⚠ CAUTION**

**The removed bearing and oil seal must be replaced with new ones.**

*NOTE:*
*If no abnormal noise, the bearing removal is not necessary.*

- Remove the final drive gear bearing by using the special tools.

**TOOL 09923-74510: Bearing remover**
**09930-30102: Sliding shaft**

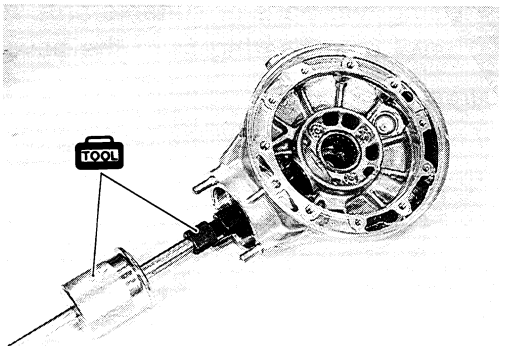


**⚠ CAUTION**

**The removed bearing must be replaced with a new one.**

*NOTE:*
*If no abnormal noise, the bearing removal is not necessary.*

- Remove the oil seal ① and O-ring ② from the bearing stopper.

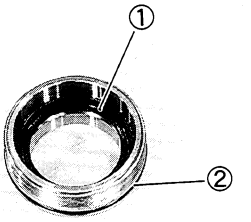


**⚠ CAUTION**

**The removed oil seal and O-ring must be replaced with new ones.**

*NOTE:*
*If no oil leakage, the oil seal removal is not necessary.*

## INSPECTION

Inspect the removed parts for the following abnormalities.

* Drive and driven bevel gear damage or wear
* Improper tooth contact
* Abnormal noise of bearings
* Bearing damage or wear
* Oil seal damage or wear
* Propeller shaft spline damage or wear

# FINAL GEAR SHIMS ADJUSTMENT

## FINAL GEAR BEARING CASE SHIM CLEARANCE

- Install the final driven gear, shims (① and ②) and final gear bearing case to the final gear case.

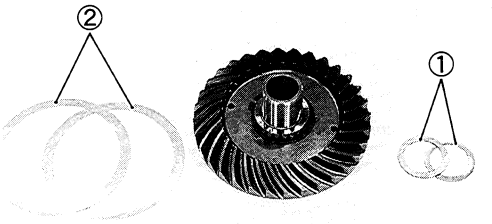


- Tighten the final gear case bolts to the specified torque.

**Final gear case bolt (8 mm) : 23 N·m (2.3 kg-m, 16.5 lb-ft)**
**(10 mm): 50 N·m (5.0 kg-m, 36.0 lb-ft)**

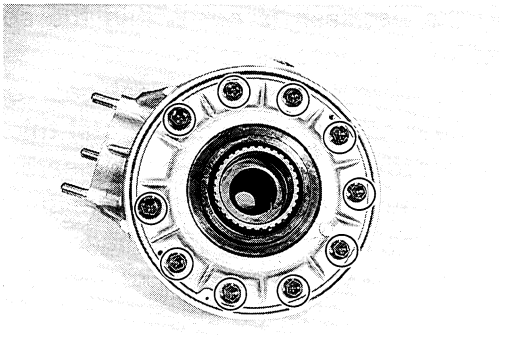

*NOTE:*
*It is not necessary to apply SUZUKI BOND "1207B" to the matching surface at this stage.*

- Measure the clearance between the shims and bearing. If it is not within the specification, the shims must be changed.

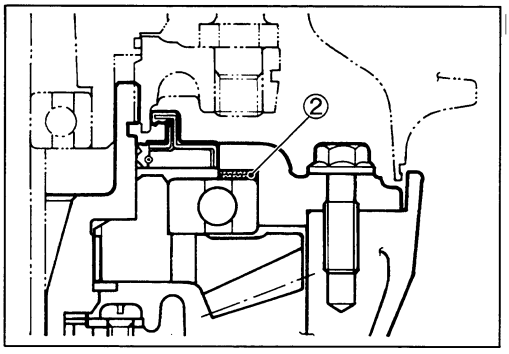


**Standard**
**Final gear case shim clearance: 0.10 mm (0.004 in)**

**Shims ② specifications**

| Part No. | Shim thickness |
|---|---|
| 27327-38B00-035 | 0.35 mm (0.014 in) |
| 27327-38B00-040 | 0.40 mm (0.016 in) |
| 27327-38B00-050 | 0.50 mm (0.020 in) |
| 27327-38B00-060 | 0.60 mm (0.024 in) |

*NOTE:*
*The shims ② are available as a set (27327-38810).*

## BACKLASH

After assembling the final gear case (See pp. 4-23 to -27.), measure the final bevel gear backlash as follows.

- Install the backlash measuring tool on the drive bevel gear coupling, and set-up a dial gauge as shown in Fig.

**TOOL 09924-34510: Backlash measuring tool (27–50 mm)**
**09900-20606 : Dial gauge (1/100 mm, 10 mm)**
**09900-20701 : Magnetic stand**

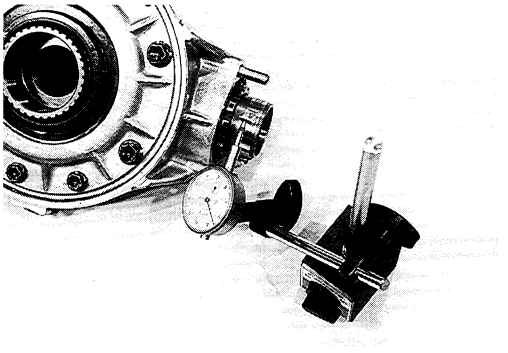

- Adjust the dial gauge so that it touches the backlash measuring tool arm at the mark; hold the final driven bevel gear securely, and turn the final drive bevel gear coupling slightly in each direction, reading the total backlash on the dial gauge.

**Standard**
**Final bevel gear backlash: 0.03–0.64 mm (0.001–0.025 in)**

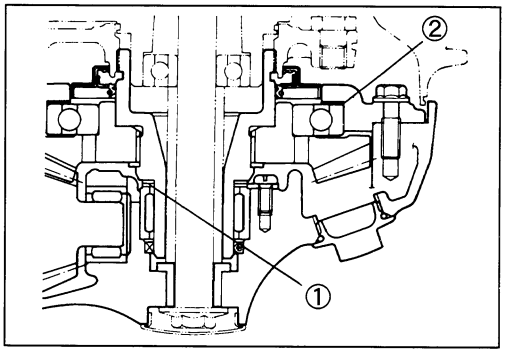


If the backlash is not within the specification, adjust the shim thickness as follows:

- Remove shims from final gear bearing case and final gear case, and measure total thickness.
- In order not to change the clearance between final driven bevel gear and bearing, the total thickness of the shims installed after a change is made must equal the original total thickness of shims.
- If backlash is too large:
  a) Install a thinner shim pack ① between final driven bevel gear and final gear case.
  b) Increase thickness of shims ② between final driven bevel gear bearing and bearing case by an amount equal to decrease above.
- If backlash is too small:
  a) Install a thicker shim pack ① between final driven bevel gear and final gear case.
  b) Decrease thickness of shims ② between final driven gear bearing and bearing case by an amount equal to increase above.

**EXAMPLE:**
Final gear to case shims ①; 1.45 mm+1.40 mm=2.85 mm
Final gear bearing to bearing case shims ②,
0.35 mm+0.60 mm=0.95 mm
Original total measurement=3.80 mm

**Backlash too large:**
Final gear to case shims ①; 1.35 mm+1.45 mm=2.80 mm
Final gear bearing to bearing case shims ②,
0.60 mm+0.40 mm=1.00 mm
Total thickness=3.80 mm

**Backlash too small:**
Final gear to case shims ①; 1.50 mm+1.40 mm=2.90 mm
Final gear bearing to bearing case shims ②;
0.50 mm+0.40 mm=0.90 mm
Total thickness=3.80 mm

**Shims ① specifications**

| Part No. | Shim thickness |
|---|---|
| 09160-35008 | 0.95 mm (0.026 in) |
| 09181-35141 | 1.05 mm (0.041 in) |
| 09181-35144 | 1.10 mm (0.043 in) |
| 09181-35148 | 1.20 mm (0.047 in) |
| 09181-35151 | 1.25 mm (0.049 in) |
| 27326-45104 | 1.35 mm (0.053 in) |
| 09181-35154 | 1.40 mm (0.055 in) |
| 27326-45100-145 | 1.45 mm (0.057 in) |
| 09181-35156 | 1.50 mm (0.059 in) |

**The shims ① (1.05–1.50) are available as a set (27326-45811).**

**Shims ② specifications**

| Part No. | Shim thickness |
|---|---|
| 27327-38B00-035 | 0.35 mm (0.014 in) |
| 27327-38B00-040 | 0.40 mm (0.016 in) |
| 27327-38B00-050 | 0.50 mm (0.020 in) |
| 27327-38B00-060 | 0.60 mm (0.024 in) |

**The shims ② are available as a set (27327-38810).**

## TOOTH CONTACT

After backlash adjustment is carried out, the tooth contact must be checked.

- Remove the 10 bolts from the final gear bearing case, and remove the case, using the two 5 mm screws. (See p. 4-17.) Do not misplace the shims. Remove the final driven bevel gear.
- Clean and de-grease several teeth on the final driven bevel gear. Coat these teeth with machinist's dye or paste, preferably of a light color.
- Re-install the final driven bevel gear with shims in place, positioning the coated teeth so that they are centered on the final drive bevel gear.
- Re-install the final gear bearing case and bolts, and tighten to specification.

**Final gear case bolt (8 mm) : 23 N·m (2.3 kg-m, 16.5 lb-ft)**
**(10 mm): 50 N·m (5.0 kg-m, 36.0 lb-ft)**

- Using a socket and handle on the final drive bevel gear coupling nut, rotate the final drive bevel gear several turns in each direction, while loading the final driven bevel gear. This will provide a contact pattern on the coated teeth of the driven bevel gear.
- Remove the final gear bearing case and final driven bevel gear, and inspect the coated teeth of the driven bevel gear. The contact patch should be as shown at right:
- If the tooth contact pattern is incorrect, as shown in ①, a thinner shim ④ is needed between the final drive bevel gear bearing and final gear case.
- If the tooth contact pattern is incorrect, as shown in ③, a thicker shim ④ is needed between the final drive bevel gear bearing and final gear case.
- If the tooth contact pattern is incorrect for either reason, the appropriate shim must be installed, and the tooth contact pattern rechecked by repeating the tooth coating procedure above.

*NOTE:*
*If it is necessary to adjust the shim thickness between final drive bevel gear bearing and final gear case, the final gear backlash may change, and should be re-checked according to the procedure outlined under the Backlash Measurement sub-section. Both adjustments may be needed until both backlash and tooth contact are correct.*

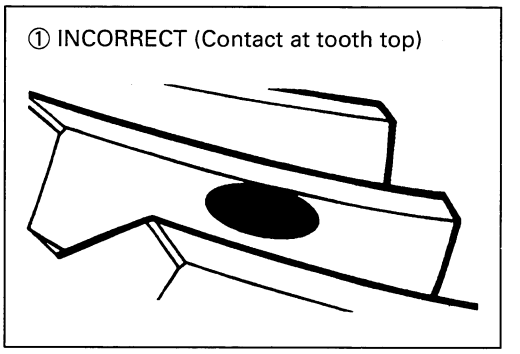


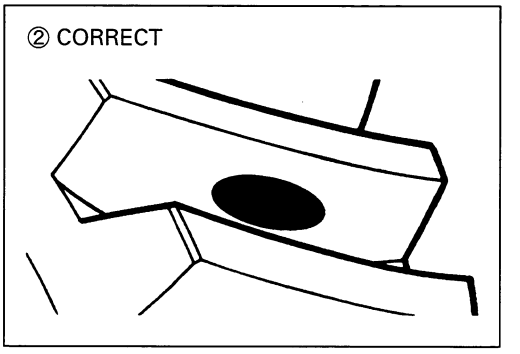


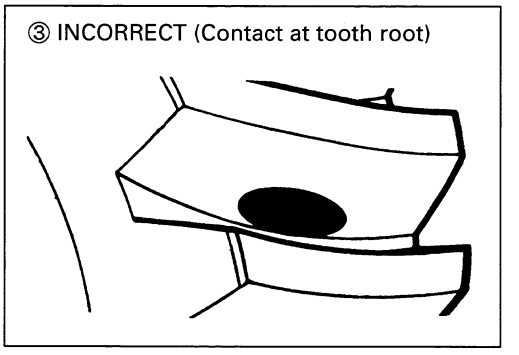


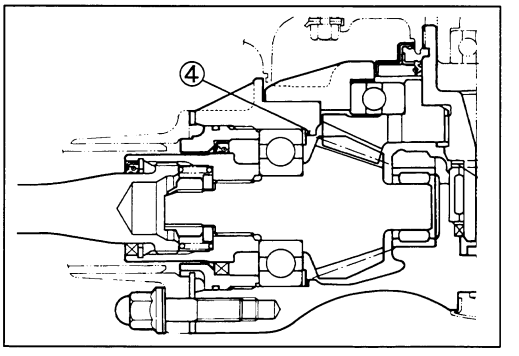


**Shims ④ specification**

| Part No. | Shim thickness |
|---|---|
| 27445-24A01-030 | 0.30 mm (0.012 in) |
| 27445-24A01-035 | 0.35 mm (0.014 in) |
| 27445-24A01-040 | 0.40 mm (0.016 in) |
| 27445-24A01-050 | 0.50 mm (0.020 in) |
| 27445-24A01-060 | 0.60 mm (0.024 in) |

**The shims ④ are available as a set (27445-24810).**

## FINAL GEAR CASE REASSEMBLY

Reassemble the final gear case in the reverse order of disassembly. Pay attention to the following points.

- Install a new O-ring and oil seal to the bearing stopper.

**⚠ CAUTION**

**Use new O-ring and oil seat to prevent oil leakage.**

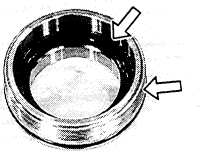

- Install the bearing ① to the final drive bevel gear by using the special tool.

**TOOL 09913-84510: Bearing installer**

**⚠ CAUTION**

**When replacing the drive bevel gear, replace the driven bevel gear also, as they must be replaced together.**

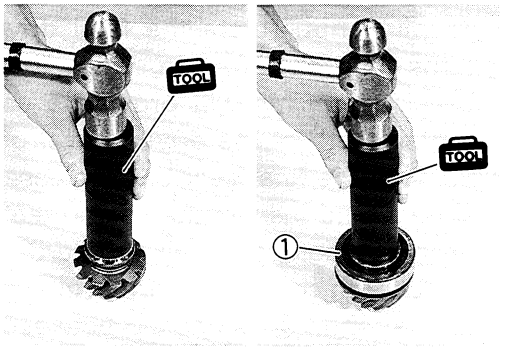


- Install the needle roller bearing for the final drive bevel gear into the final gear case by using the special tool.

**TOOL 09913-75821 : Bearing installer**

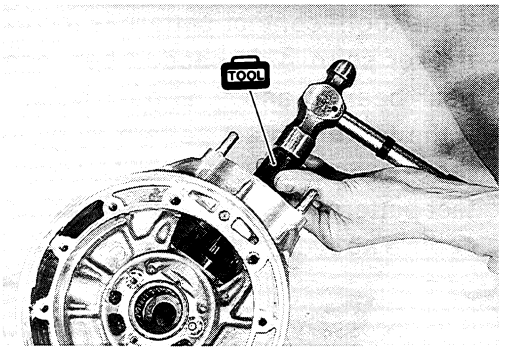


- Install the oil seal into the final gear case.

**⚠ CAUTION**

*** Use a new oil seal to prevent oil leakage.**
*** The lip and spring of the oil seal should face to the driven bevel gear side.**

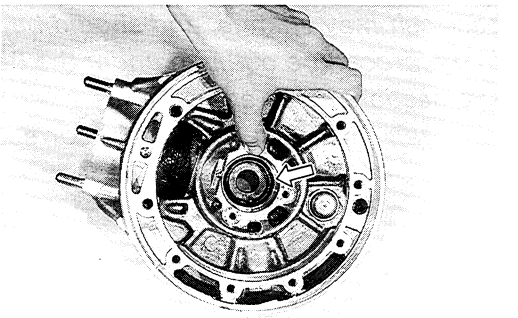

- Install the needle roller bearing for the final driven bevel gear into the final gear case by using the special tool.

**TOOL 09913-76010: Bearing installer**

*NOTE:*
*The stamped ward on the bearing end should face to the driven bevel gear side.*

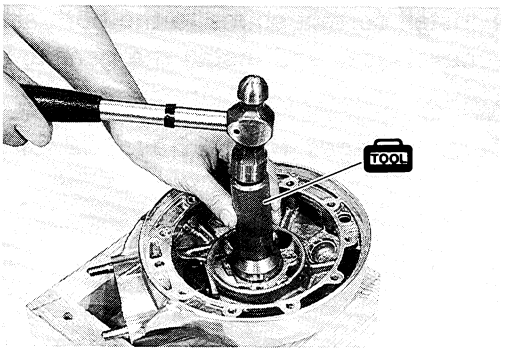


- Install the bearing retainer. Apply a small quantity of the THREAD LOCK "1342" on the screws, and tighten them to the specified torque.

**1342 99000-32050: THREAD LOCK "1342"**

**Bearing retainer bolt: 9 N·m (0.9 kg-m, 6.5 lb-ft)**

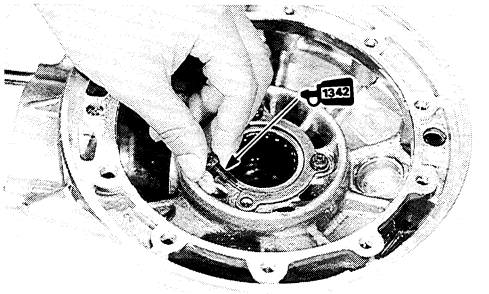


- Install a new oil seal to the final gear bearing case.
- Apply final gear oil to the lip of the oil seal.

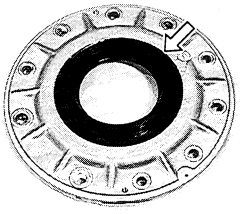

- Install the final driven gear to the shaft by using the special tool.
- Install a new circlip properly.

**TOOL 09900-06107: Snap ring pliers**
**09924-74570: Final driven gear bearing installer/ remover**

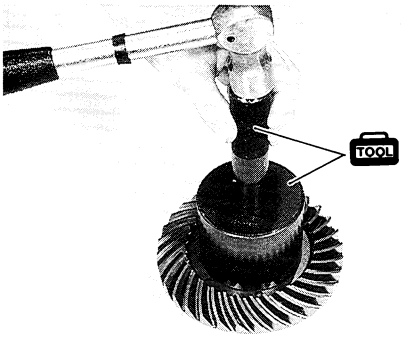


- Install the final driven bevel gear bearing to the bevel gear.

*NOTE:*
*The stamped mark Ⓐ on the bearing faces out.*

**⚠ CAUTION**

**Do not tap the bearing outer race.**

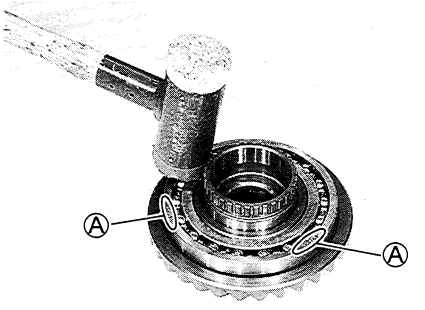

- Install correct shims to the both sides of the final driven bevel gear and install the gear to the final gear case.

*NOTE:*
*Refer to pages 4-20, -21 and -22 for shim adjustment.*

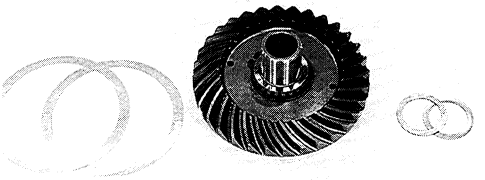

- Apply SUZUKI BOND "1207B" to the mating surface of the final gear case and final gear bearing case.

**⚠ CAUTION**

**Do not block the breather passage when applying SUZUKI BOND "1207B".**

**1207B 99000-31140: SUZUKI BOND "1207B"**

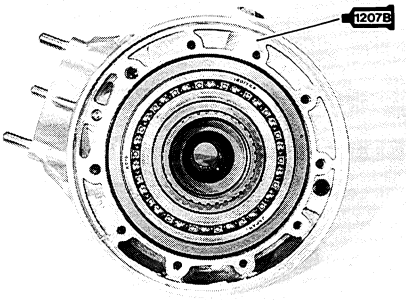


- Apply THREAD LOCK "1342" to the final gear case bolts and tighten them to the specified torque.

**1342 99000-32050: THREAD LOCK "1342"**

**Final gear case bolt (8 mm) : 23 N·m (2.3 kg-m, 16.5 lb-ft)**
**(10 mm): 50 N·m (5.0 kg-m, 36.0 lb-ft)**

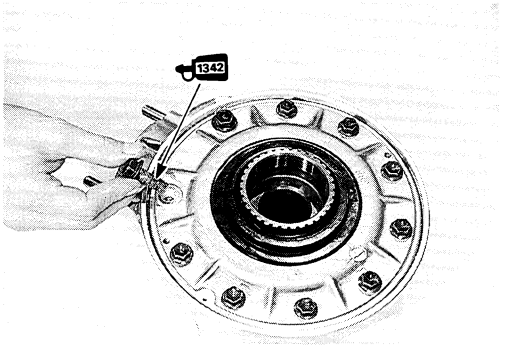


- Install the correct shims to the final drive bevel gear and install the bevel gear to the final gear case.

*NOTE:*
*Refer to pages 4-20, -21 and -22 for shim adjustment.*

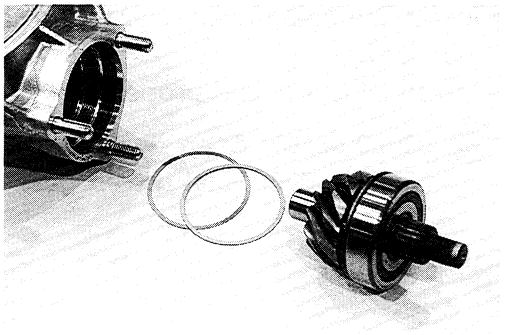

- Apply oil to the O-ring and the oil seal.
- Tighten the bearing stopper to the specified torque by using the special tool.

**TOOL 09924-62410: Final drive gear bearing holder wrench**

**Final drive bevel gear bearing stopper: 110 N·m (11.0 kg-m, 79.5 lb-ft)**

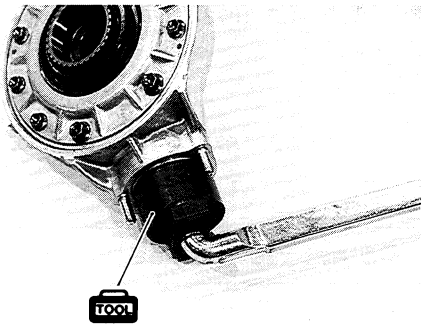

- Apply a small quantity of the THREAD LOCK "1342" to the final drive bevel gear coupling nut.

**99000-32050: THREAD LOCK "1342"**

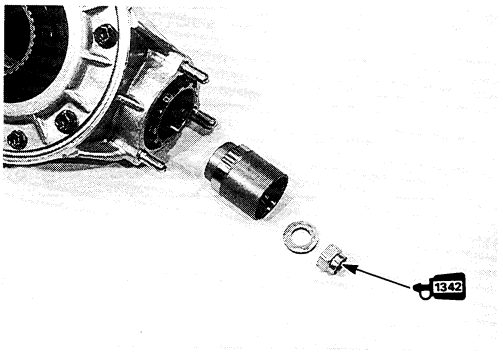


- Tighten the nut to the specified torque.

**09924-64510: Final drive gear coupling holder**

**Final drive bevel gear coupling nut: 100 N·m (10.0 kg-m, 72.5 lb-ft)**

- Lock the final drive bevel gear coupling nut with a center punch.

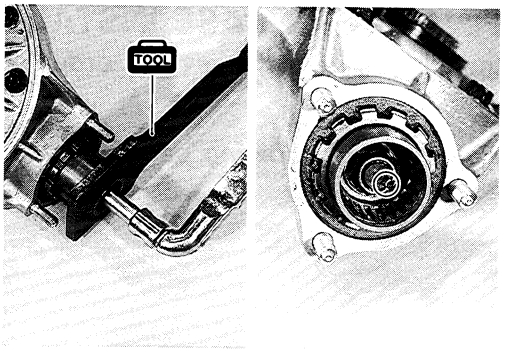


- Apply Lithium Base Molybdenum grease (NLGI #2) to the propeller shaft splines and final drive bevel gear coupling.

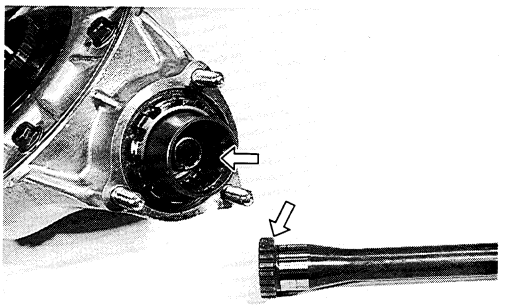

- Install the spring ①, propeller shaft ② and circlip ③ in that order.

**09900-06108: Snap ring pliers**

- After installing the propeller shaft with a new circlip, make sure that the propeller shaft turns smoothly without any hitch or bearing noise.

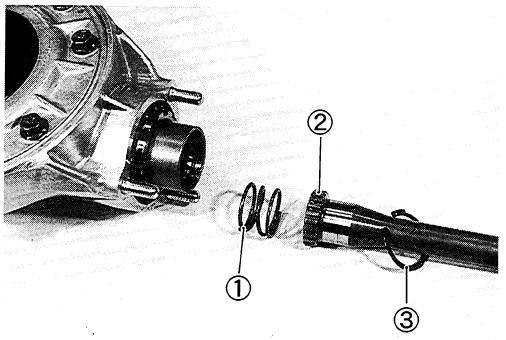


- Apply grease to the lip of the oil seal and install it to the final drive bevel gear coupling.

**⚠ CAUTION**

**Use a new oil seal to prevent oil leakage.**

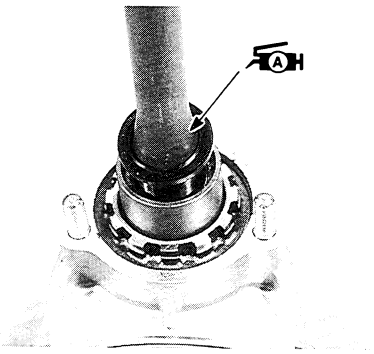

- Install the stopper plate.

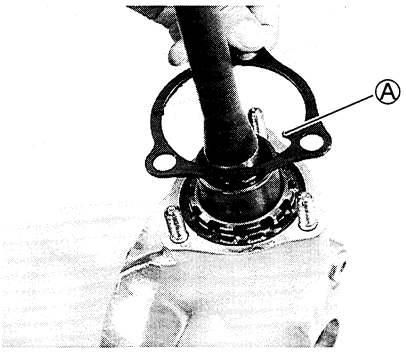


**⚠ CAUTION**

**When installing the plate, fit the protrusion Ⓐ of plate to the one of the bearing stopper grooves.**

*NOTE:*
*Two kinds of plates are available to lock the stopper at the proper position.*

## FINAL GEAR CASE INSTALLATION

Installation is in the reverse order of removal.

*NOTE:*
*Refer to the following pages for the details of each step.*

**Install:**

- Final gear case (See p. 6-41 and -42)

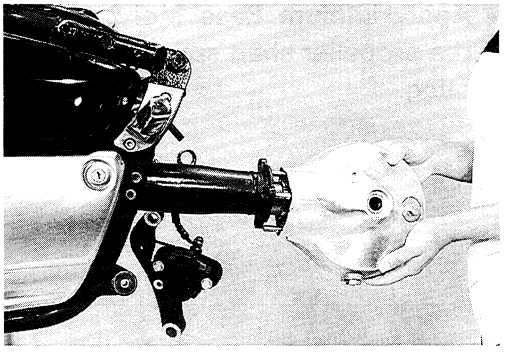

- Rear wheel (See p. 6-32.)

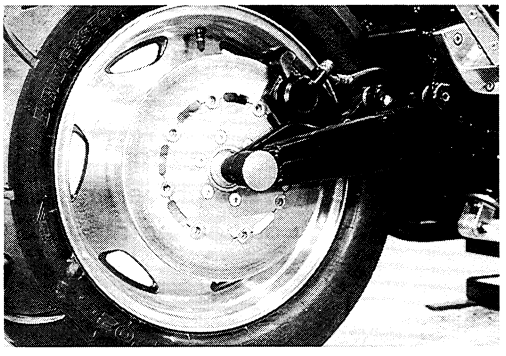

Adjust the following item to specification.

| | Page |
|---|---|
| * Final gear oil page | 2-14 |

# FUEL SYSTEM

CONTENTS


FUEL SYSTEM ..... 5- 1
FUEL TANK ..... 5- 2
REMOVAL ..... 5- 2
REMOUNTING ..... 5- 3
FUEL PUMP ..... 5- 4
REMOVAL ..... 5- 4
INSPECTION ..... 5- 5
REMOUNTING ..... 5- 5
FUEL STRAINER ..... 5- 5
REMOVAL ..... 5- 5
INSPECTION ..... 5- 6
INSTALLATION ..... 5- 6
FUEL LEVEL GAUGE ..... 5- 6
REMOVAL ..... 5- 6
INSPECTION ..... 5- 6
INSTALLATION ..... 5- 6
FUEL-VAPOR SEPARATOR/FUEL SHUT-OFF VALVE ..... 5- 7
REMOVAL ..... 5- 7
INSPECTION ..... 5- 7
INSTALLATION ..... 5- 7
FUEL TANK INLET VALVE ..... 5- 7
REMOVAL ..... 5- 7
INSPECTION ..... 5- 8
INSTALLATION ..... 5- 8
TPC (TANK PRESSURE CONTROL) VALVE ..... 5- 8
REMOVAL ..... 5- 8
INSPECTION ..... 5- 8
INSTALLATION ..... 5- 8
CARBURETOR ..... 5- 9
CONSTRUCTION ..... 5- 9
SPECIFICATION ..... 5-10
I.D. NO. LOCATION ..... 5-11
DIAPHRAGM AND PISTON OPERATION ..... 5-12
SLOW SYSTEM ..... 5-13
TRANSIENT ENRICHMENT SYSTEM ..... 5-13
MAIN SYSTEM ..... 5-14
STARTER (ENRICHER) SYSTEM ..... 5-15
FLOAT SYSTEM ..... 5-15
REMOVAL ..... 5-16
DISASSEMBLY ..... 5-17
CARBURETOR CLEANING ..... 5-22
CARBURETOR INSPECTION ..... 5-22
REASSEMBLY AND REMOUNTING ..... 5-23
CARBURETOR SYNCHRONIZATION ..... 5-27

# FUEL SYSTEM

The fuel system consists of the fuel tank, fuel pump, fuel strainer, fuel tank inlet valve, fuel-vapor separator/fuel shut-off valve, fuel catch tank, TPC (Tank Pressure Control) valve and carburetors.
The fuel pump located behind the left side upper cover runs on electricity from the battery. When the engine stop switch "RUN" position and turning the ignition switch ON, the fuel pump operates to pump up the carburetor float chamber. (After a few seconds, the fuel pump will stop unless depressing the starter button.)
The fuel inlet valve located inside of the fuel tank prevents sudden rising of the fuel level when refueling. The fuel-vapor separator/fuel shut-off valve separate fuel from vapor. And also it prevents fuel from flowing out the fuel tank when rising the fuel level because of acceleration, deceleration or falling down.

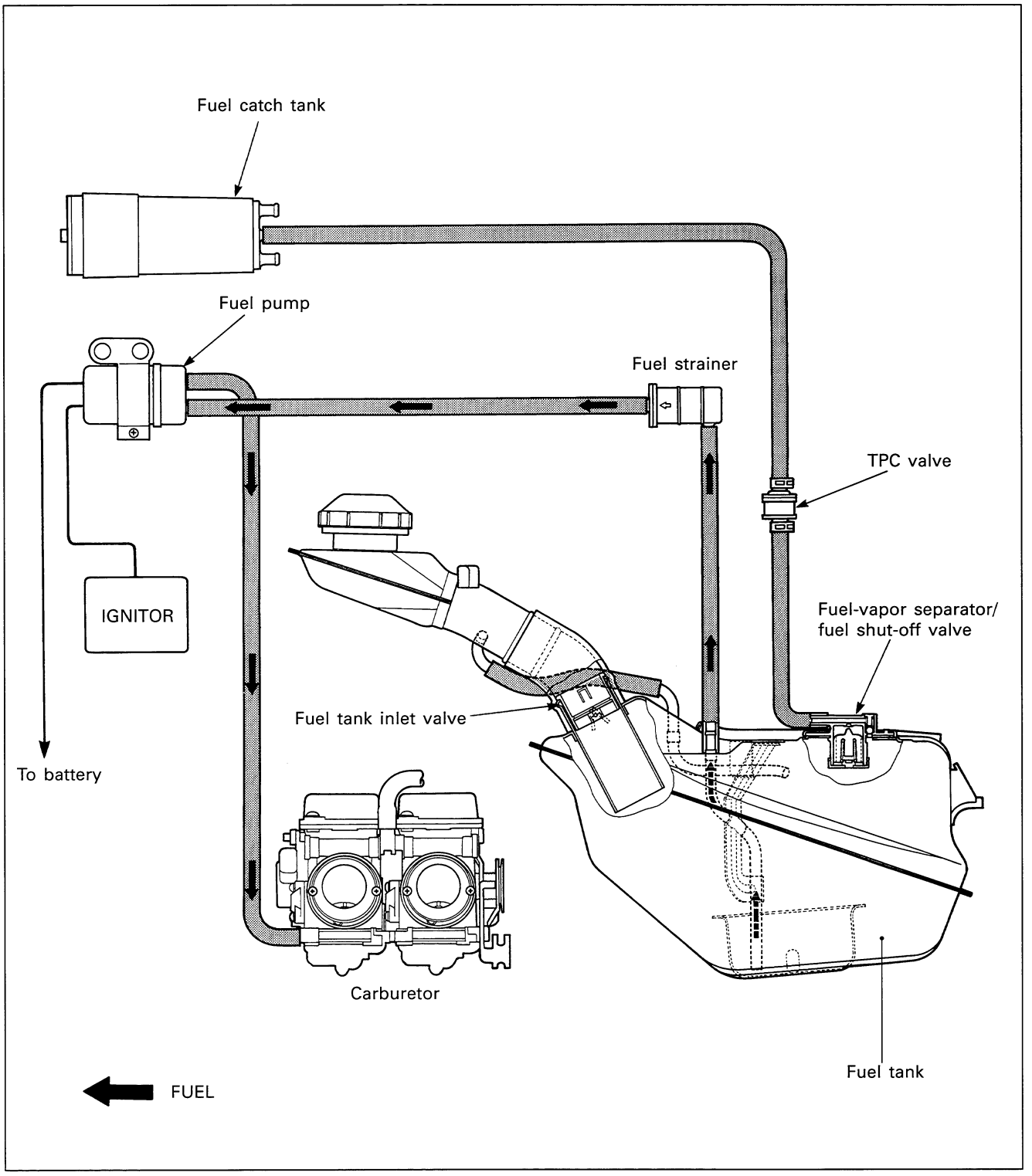

# FUEL TANK

## REMOVAL

- Remove the seat ①. (See p. 6-2.)
- Remove the meter and fuel inlet cover ②. (See pp. 6-3 and -4.)
- Remove the frame head covers ③ and the upper covers ④. (See p. 6-3.)
- Remove the frame covers ⑤. (See p. 6-2.)

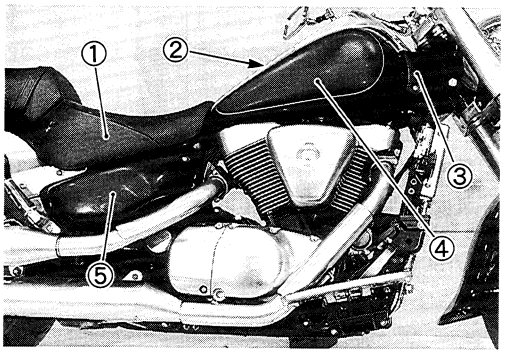


- Remove the engine side box. (See p. 3-3.)
- Remove the exhaust pipes and mufflers ⑥. (See p. 3-5.)

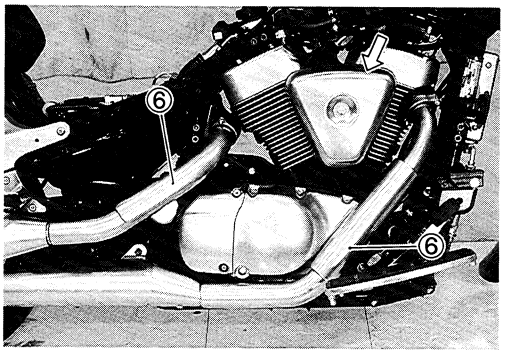


- Remove the frame handle grip ⑦.

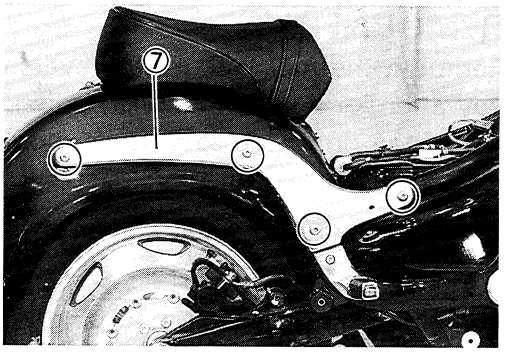


- Remove the fuel tank mounting bolts.
- Remove the heat shield bolt.
- Remove the seat frame ⑧ by removing its mounting bolts and nuts.

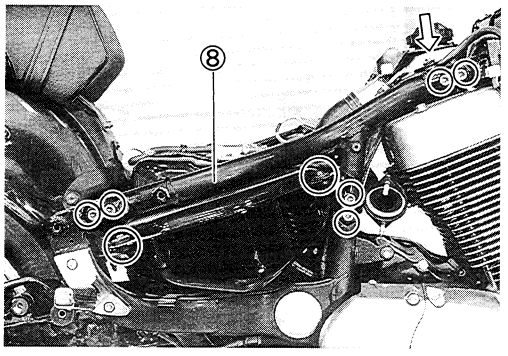


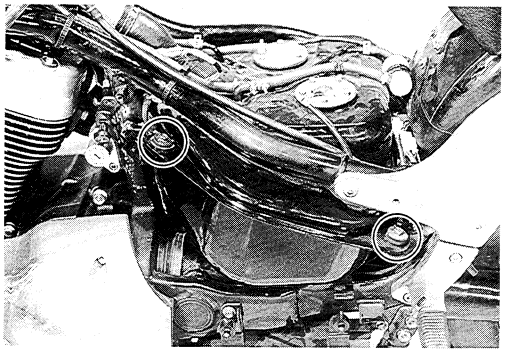

- Disconnect the fuel hose ①, fuel tank breather hose ② and fuel level gauge lead wire coupler ③.

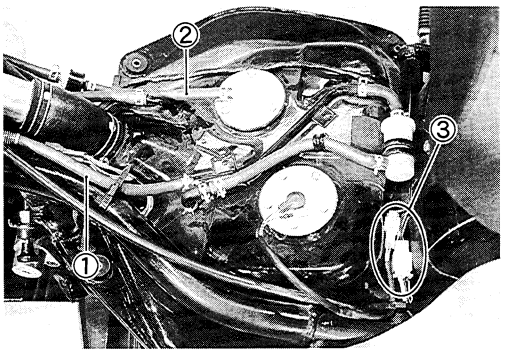


**⚠WARNING**

**Gasoline is highly flammable and explosive.**
**Keep heat, spark and flame away.**

- Disconnect the brake light/Taillight and turn signal light lead wire couplers ③.

- Remove the fuel tank.

*NOTE:*
* *Refer to page 5-6 for the fuel level gauge removal.*
* *Refer to page 5-5 for the fuel strainer removal.*
* *Refer to pages 5-7 for the fuel tank inlet valve removal.*
* *Refer to page 5-7 for the fuel-vapor separator/fuel shut-off valve removal.*

## REMOUNTING

Remount the fuel tank in the reverse order of removal.
Pay attention to the following points.

- Tighten right side seat frame mounting bolts and nut ① to the specified torque.

**Frame mounting bolt and nut ①: 50 N·m (5.0 kg-m, 36.0 lb-ft)**

- Tighten the fuel tank mounting bolts securely.

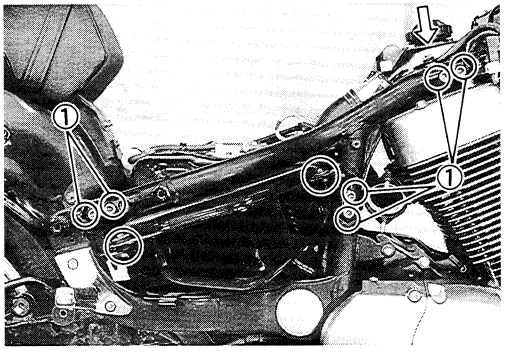


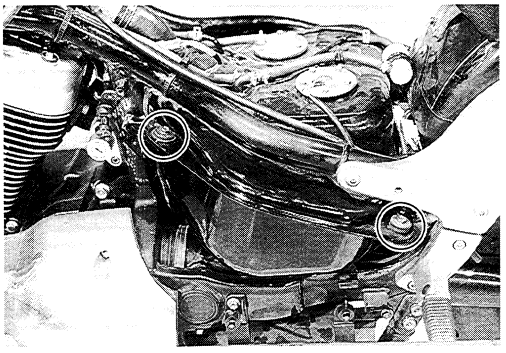

- Apply a small quantity of the THREAD LOCK SUPER "1303" to the frame handle grip bolts and tighten them to the specified torque.

**1303 99000-32030: THREAD LOCK SUPER "1303"**

**Frame handle grip mounting bolt: 50 N·m (5.0 kg-m, 36.0 lb-ft)**

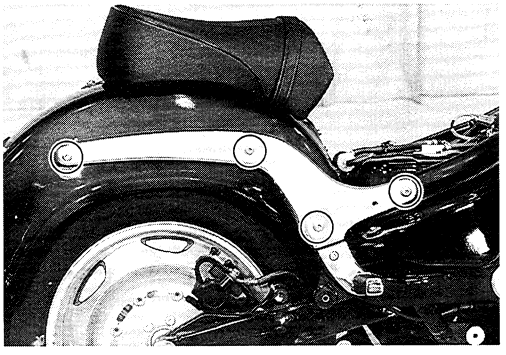

- Install the exhaust pipes and mufflers. (See p. 3-15.)

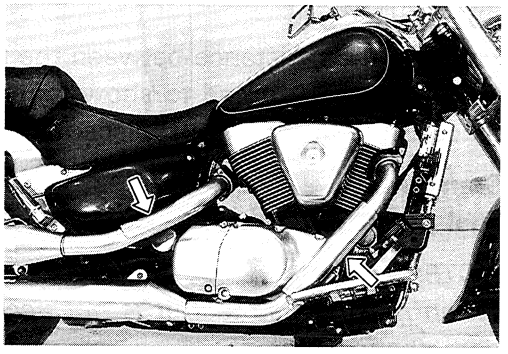

# FUEL PUMP

## REMOVAL

- Remove the seat. (See p. 6-2.)
- Remove the meter and fuel inlet cover ①. (See pp. 6-3 and -4.)
- Remove the left side frame head cover ② and upper cover ③. (See p. 6-3.)

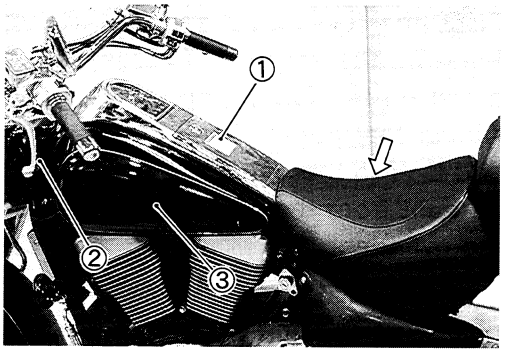


- Disconnect the fuel hoses (④, ⑤) from the fuel pump.
  ④: Outlet hose
  ⑤: Inlet hose

**⚠WARNING**

**Gasoline is highly flammable and explosive.**
**Keep heat, spark and flames away from gasoline.**

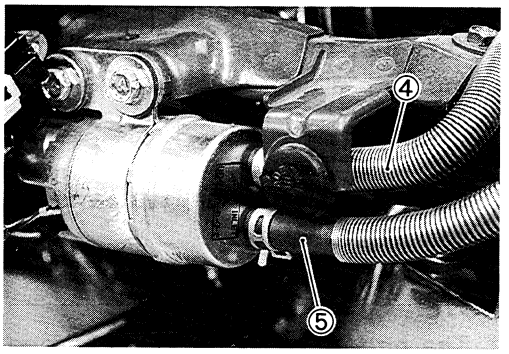


- Disconnect the fuel pump lead wire coupler.
- Remove the fuel pump by removing its mounting bolts.

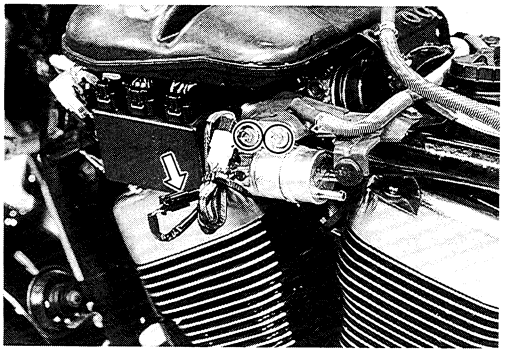

## INSPECTION

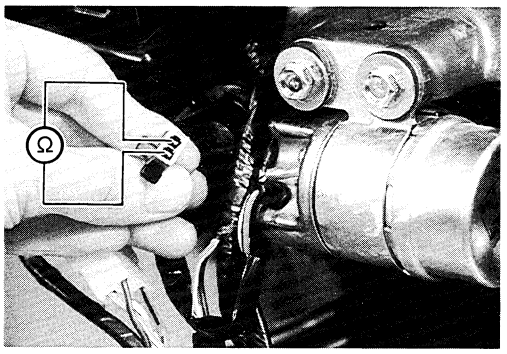


Measure the resistance between the fuel pump lead wires. If the resistance noted to show infinity or too low a resistance value, it must be replaced.

**Standard**
**Fuel pump resistance: 1–2.5 Ω**

*NOTE:*
*When making this test, it is not necessary to remove the combination meter.*

Place the fuel pump and battery as shown in the figure. Measure the amount of kerosene discharged and conduct a test on the fuel pump.
Attach fuel pump harness Br/B to the battery ⊕ terminal and B/W to the battery ⊖ terminal. Measure the discharge amount from the fuel pump for 1 minute using a measuring cylinder.

**Standard**
**Discharge amount: Over 600 ml (1.27/1.06 US/Imp pt)**

If the discharge amount is less than the specification, it means that the fuel pump is defective. Replace the fuel pump with a new unit.

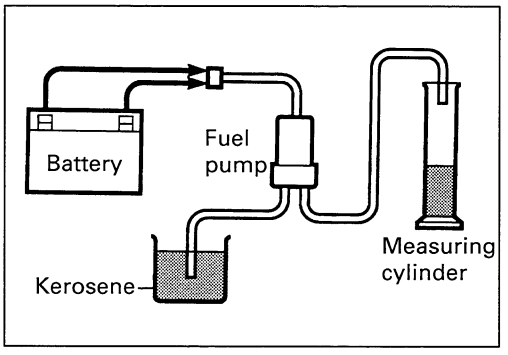


**⚠WARNING**

**Do not use gasoline, which is extremely flammable and explosive.**

*NOTE:*
* *The battery must be fully charged.*
* *Upon completion of the test, all the kerosene should be drained from the fuel pump.*

## REMOUNTING

Remount the fuel tank in the reverse order of removal.

*NOTE:*
*Refer to the page 8-16 for the fuel system hose routing.*

# FUEL STRAINER

## REMOVAL

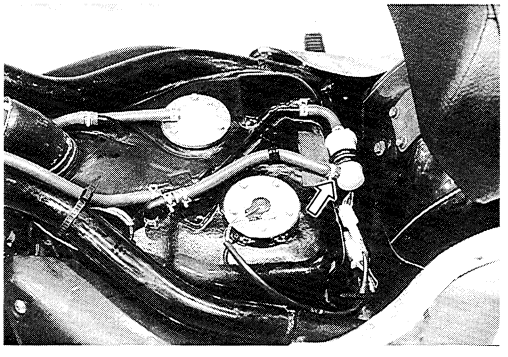

- Remove the seat. (See p. 6-2.)
- Remove the rear fender. (See p. 6-4.)
- Remove the fuel strainer

**⚠WARNING**

**Gasoline is highly flammable and explosive.**
**Keep heat, spark and flames away from gasoline.**

## INSPECTION

Inspect the fuel strainer for any damage or clogging.
If the fuel strainer is dirty with sediment or rust, fuel will not flow smoothly and loss in engine power may result. Replace it with a new one.

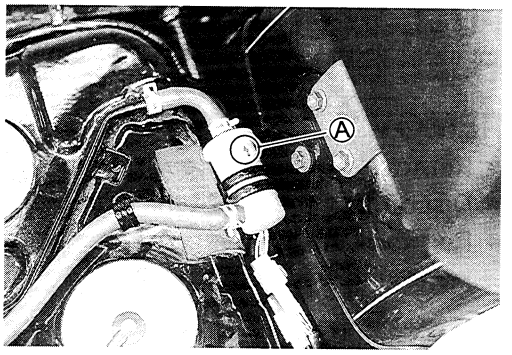


## INSTALLATION

Install the fuel strainer in the reverse order of removal.

*NOTE:*
*When installing the fuel strainer, be sure to face the arrow mark Ⓐ on it to the fuel pump side.*

- Install the rear fender. (See p. 6-4.)

*NOTE:*
*Refer to the page 8-16 for the fuel system hose routing.*

# FUEL LEVEL GAUGE

## REMOVAL

- Remove the seat. (See p. 6-2.)
- Disconnect the fuel level gauge lead wire.
- Remove the fuel level gauge by removing its mounting bolts.

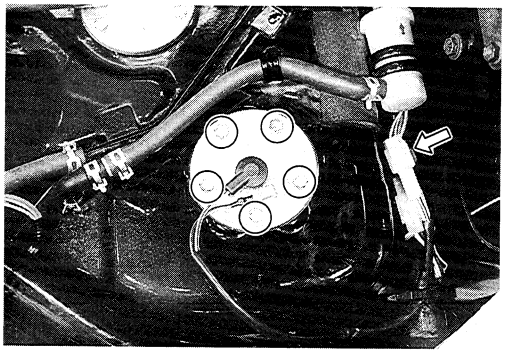

**⚠ WARNING**

**Gasoline is highly flammable and explosive.**
**Keep heat, spark and flames away from gasoline.**

## INSPECTION

*NOTE:*
*Refer to page 7-31 for the fuel level gauge inspection.*

## INSTALLATION

Install the fuel level gauge in the reverse order of removal. When installing the fuel level gauge, lightly tighten all the fuel level gauge mounting bolts and then tighten them to the specified torque in the ascending order of numbers.

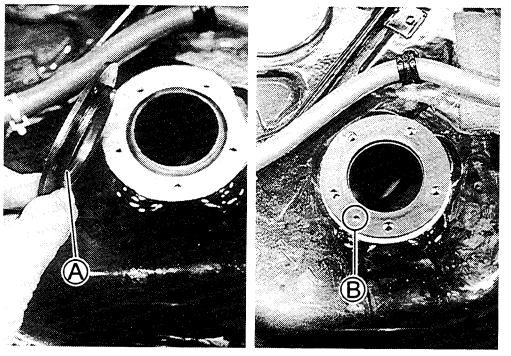


**Fuel level gauge mounting bolt: 4 N·m (0.4 kg-m, 3.0 lb-ft)**

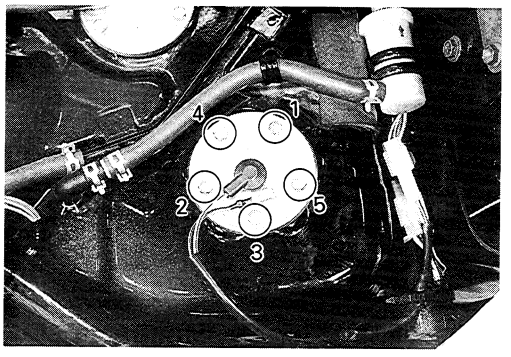


*NOTE:*
* *The flange portion Ⓐ of the gasket faces to the fuel tank side.*
* *The hole Ⓑ of the gasket faces right side as shown.*

**⚠ CAUTION**

**Use a new gasket to prevent fuel leakage.**

*NOTE:*
*Refer to the page 8-16 for the fuel system hose routing.*

# FUEL-VAPOR SEPARATOR/ FUEL SHUT-OFF VALVE

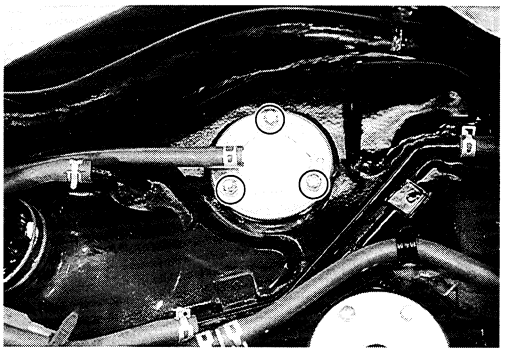

## REMOVAL

- Remove the seat. (See p. 6-2.)
- Disconnect the fuel tank breather hose.
- Remove the fuel-vapor separator/fuel shut-off valve by removing its mounting bolts.

**⚠WARNING**

**Gasoline is highly flammable and explosive.**
**Keep heat, spark and flames away from gasoline.**

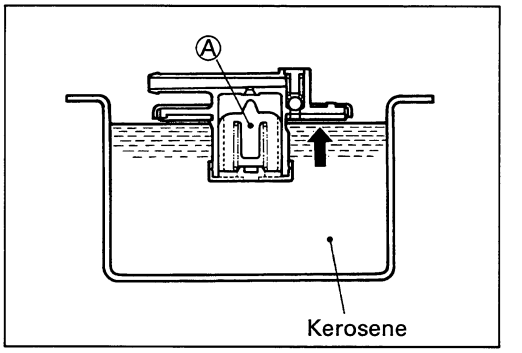


## INSPECTION

- Check the fuel-vapor separator/fuel shut-off valve for damage.
- Put the fuel-vapor separator/fuel shut-off valve in kerosene and check that the float Ⓐ moves smoothly to contact valve seat.
  If the float Ⓐ does not move smoothly, replace it with a new one.

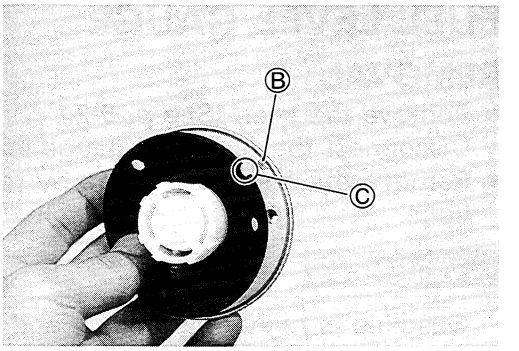


## INSTALLATION

When installing the fuel-vapor separator/fuel shut-off valve, lightly tighten all its mounting bolts and tighten them to the specified torque.

**Fuel-vapor separator/fuel shut-off valve mounting bolt: 4 N·m (0.4 kg-m, 3.0 lb-ft)**

*NOTE:*

** Align the portion Ⓑ on the fuel-vapor separator/fuel shut-off valve to the groove Ⓒ of the gasket.*

** Refer to the page 8-16 for the fuel system hose routing.*

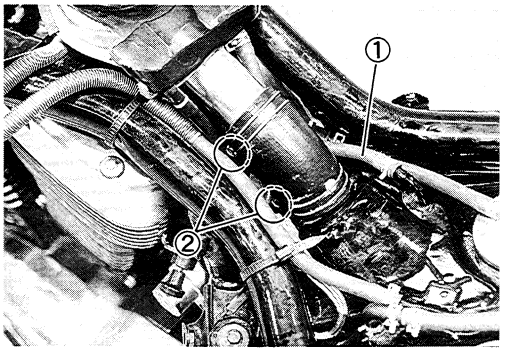


# FUEL TANK INLET VALVE

## REMOVAL

- Remove the seat. (See p. 6-2.)
- Remove the meter and fuel inlet cover and upper cover. (See pp. 6-3 and 6-4.)
- Remove the frame cover. (See p. 6-2.)
- Disconnect the air vent hose ①.
- Remove the fuel inlet hose from the fuel tank by loosening the clamp ②.
- Remove the fuel tank inlet valve.

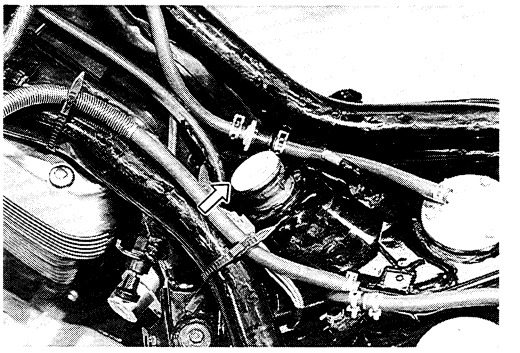

**⚠WARNING**

**Gasoline is highly flammable and explosive.**
**Keep heat, spark and flames away from gasoline.**

## INSPECTION

- Check the fuel tank inlet valve for damage.
- Put the fuel tank inlet valve in kerosene and check that the butterflies Ⓐ move smoothly, if the butterflies Ⓐ do not move smoothly, replace it with a new one.

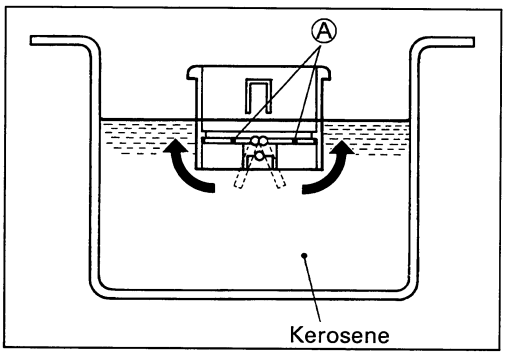


## INSTALLATION

Install the fuel tank inlet valve in the reverse order of removal. Pay attention to the following point.

- Tighten the fuel inlet hose clamp to the specified torque.

**Fuel inlet hose clamp: 2 N·m (0.2 kg-m, 1.5 lb-ft)**

*NOTE:*

** The ends of the clamp faces down.*

** Refer to the page 8-16 for the fuel system hose routing.*

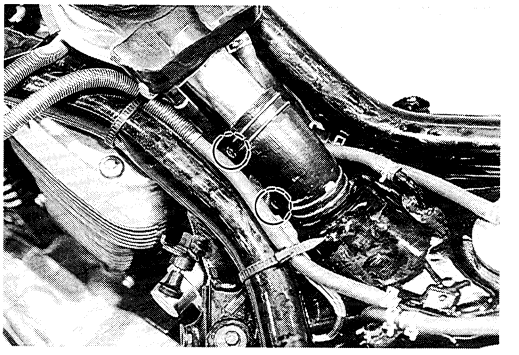

# TPC (TANK PRESSURE CONTROL) VALVE

## REMOVAL

- Remove the seat. (See p. 6-2.)
- Remove the meter and fuel inlet cover and upper cover. (See pp. 6-3 and -4.)
- Remove the TPC valve ①.

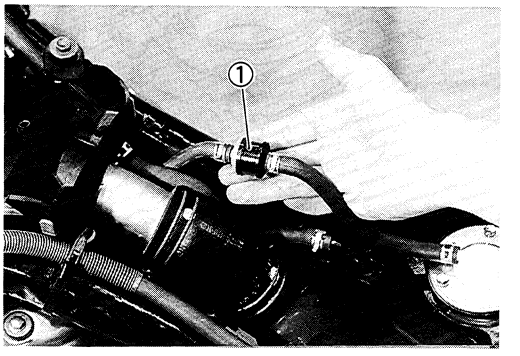


## INSPECTION

- Blow the TPC valve from the orange color side. If air flow out, it is in sound condition.
- Also, blow the TPC valve from opposite side. If you feel large resistance, the check valve in sound condition.
- If the operation is in correct, replace the check valve with a new one.

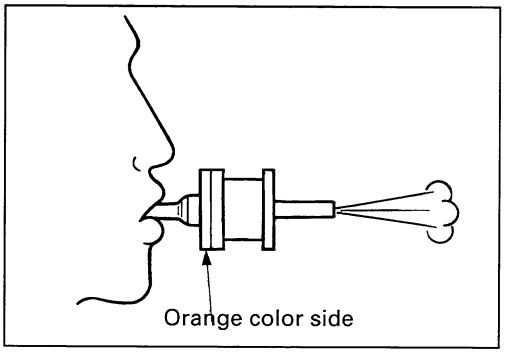


## INSTALLATION

When installing the TPC valve, the orange color side faces to the catch tank side.

*NOTE:*

*Refer to the page 8-16 for the fuel system hose routing.*

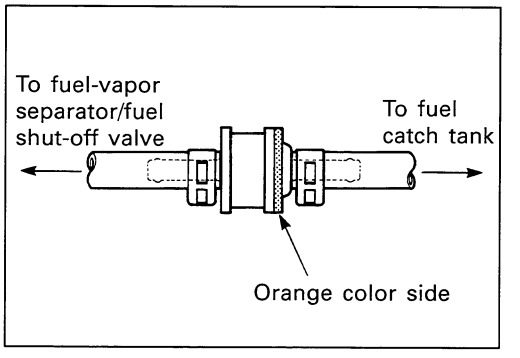

# CARBURETOR

## CONSTRUCTION

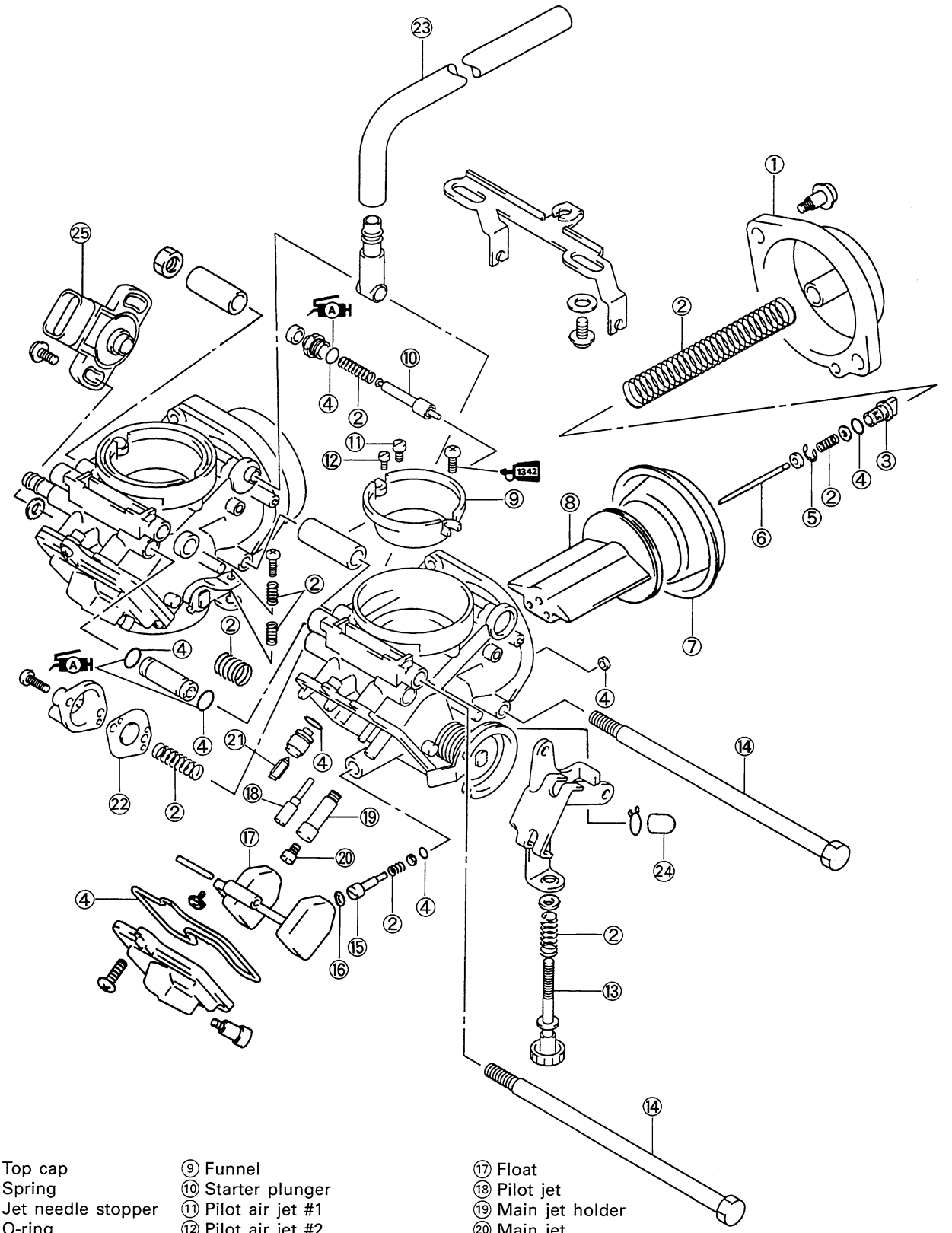


① Top cap
② Spring
③ Jet needle stopper
④ O-ring
⑤ E-ring
⑥ Jet needle
⑦ Diaphragm
⑧ Piston valve
⑨ Funnel
⑩ Starter plunger
⑪ Pilot air jet #1
⑫ Pilot air jet #2
⑬ Throttle stop screw
⑭ Carburetor connecting bolt
⑮ Pilot screw
⑯ Plug (For E-18, 33)
⑰ Float
⑱ Pilot jet
⑲ Main jet holder
⑳ Main jet
㉑ Needle valve
㉒ Coasting valve
㉓ Air vent hose
㉔ Inlet cap
㉕ Throttle position sensor

## SPECIFICATIONS

| ITEM | SPECIFICATION | |
|---|---|---|
| | E-02, 04, 25, 34 | E-03, 28 |
| Carburetor type | BDSR36 | ← |
| Bore size | 36.5 mm | ← |
| I.D. No. | 10F0 | 10F1 |
| Idle r/min. | 1 000 ± 100 r/min. | ← |
| Float height | 7.0 ± 0.5 mm<br>(0.28 ± 0.02 in) | ← |
| Main jet (M.J.) | F: #112.5<br>R: #110 | F: #112.5<br>R: #110 |
| Jet needle (J.N.) | F: 5D94-56-3<br>R: 5E8-56-3 | F: 5D95-56<br>R: 5E9-56 |
| Needle jet (N.J.) | P-0 | P-0M |
| Throttle valve (Th.V.) | #90 | ← |
| Pilot jet (P.J.) | #32.5 | #32.5 |
| Pilot screw (P.S.) | PRE-SET<br>(F: 2 turns back<br>R: 2 turns back) | PRE-SET<br>(F: $2^1/_4$ turns back<br>R: $2^1/_8$ turns back) |
| Throttle cable play | 2.0–4.0 mm<br>(0.08–0.16 in) | ← |

| ITEM | SPECIFICATION | |
|---|---|---|
| | E-17, 22, 24 | E-18 |
| Carburetor type | BDSR36 | ← |
| Bore size | 36.5 mm | ← |
| I.D. No. | 10F2 | 10F3 |
| Idle r/min. | 1 000 ± 100 r/min. | 1 000 ± 50 r/min. |
| Float height | 7.0 ± 0.5 mm<br>(0.28 ± 0.02 in) | ← |
| Main jet (M.J.) | F: #112.5<br>R: #110 | ← |
| Jet needle (J.N.) | F: 5D94-56-3<br>R: 5E8-56-3 | ← |
| Needle jet (N.J.) | P-0 | ← |
| Throttle valve (Th.V.) | #90 | ← |
| Pilot jet (P.J.) | #32.5 | ← |
| Pilot screw (P.S.) | PRE-SET<br>(F: 2 turns back<br>R: 2 turns back) | PRE-SET<br>(F: $2^1/_2$ turns back<br>R: $2^5/_8$ turns back) |
| Throttle cable play | 2.0–4.0 mm<br>(0.08–0.16 in) | ← |

| ITEM | | SPECIFICATION |
|---|---|---|
| | | E-33 |
| Carburetor type | | BDSR36 |
| Bore size | | 36.5 mm |
| I.D. No. | | 10F4 |
| Idle r/min. | | 1 000 ± 100 r/min. |
| Float height | | 7.0 ± 0.5 mm<br>(0.28 ± 0.02 in) |
| Main jet | (M.J.) | F: #112.5<br>R: #110 |
| Jet needle | (J.N.) | F: 5D95-56<br>R: 5E9-56 |
| Needle jet | (N.J.) | P-0M |
| Throttle valve | (Th.V.) | #90 |
| Pilot jet | (P.J.) | #32.5 |
| Pilot screw | (P.S.) | PRE-SET |
| Throttle cable play | | 2.0–4.0 mm<br>(0.08–0.16 in) |

## I.D. NO. LOCATION

Each carburetor has I.D. Number Ⓐ stamped on the carburetor body according to its specifications.

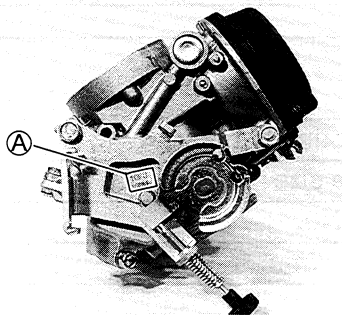

## DIAPHRAGM AND PISTON OPERATION

The carburetor is a variable-venturi type, whose venturi cross sectional area is increased or decreased automatically by the piston valve ①. The piston valve moves according to the negative pressure present on the downstream side of the venturi Ⓐ. Negative pressure is admitted into the diaphragm chamber ② through an orifice ③ provided in the piston valve ①.
Rising negative pressure overcomes the spring ④ force, causing the piston valve ① to rise into the diaphragm chamber and prevent the air velocity from increasing. Thus, air velocity in the venturi passage is kept relatively constant for improved fuel atomization and the precise air/fuel mixture.

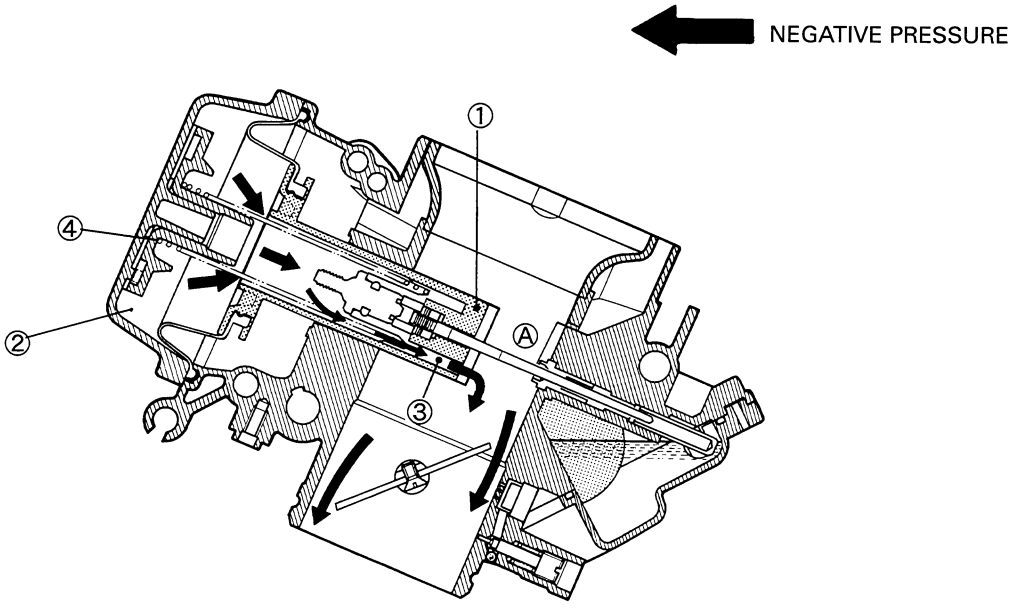


**LOWER POSITION OF THE PISTON VALVE**

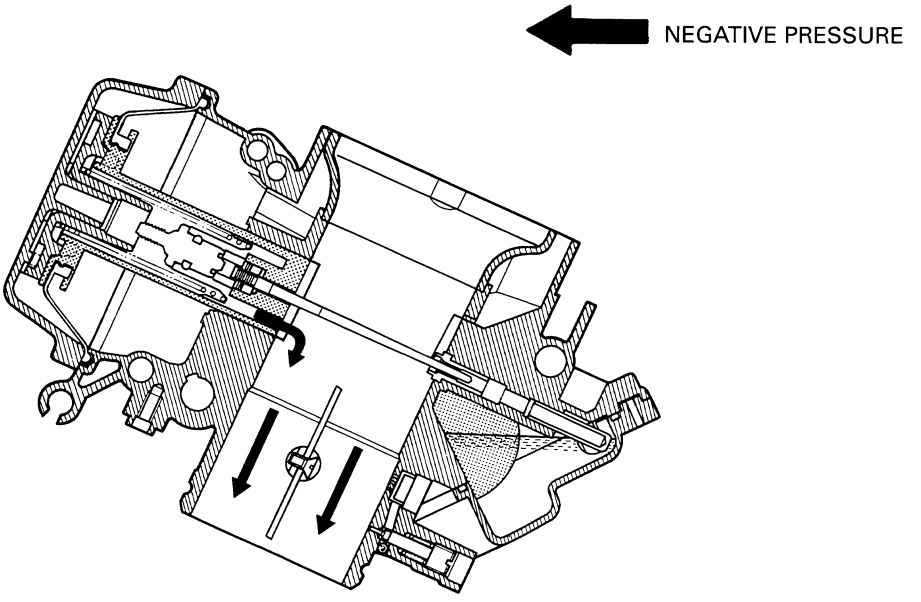


**UPPER POSITION OF THE PISTON VALVE**

## SLOW SYSTEM

This system supplies fuel to the engine during engine operation with throttle valve ① closed or slight opened. The fuel from the float chamber ② is first passage and metered by the pilot jet ③ where it mixes with air coming in through #1 pilot air jet ④ and #2 pilot air jet ⑤.
This mixture, rich with fuel, then goes up through pilot pipe to pilot screw ⑥. A part of the mixture is discharged into the main bore out of by-pass ports ⑦. The remainder is then metered by pilot screw and sprayed out into the main bore through pilot outlet ⑧.

## TRANSIENT ENRICHMENT SYSTEM

The transient enrichment system is a device which keeps fuel/air mixture ratio constant in order not to generate unstable combustion when the throttle grip is returned suddenly during high speed driving. For normal operation, sum of the air from the #1 pilot air jet ④ and #2 pilot air jet ⑤ keeps proper fuel/air mixture ratio. But when the throttle valve is closed suddenly, a large negative pressure generated on cylinder side works on to a diaphragm ⑨. The ball ⑩ held by the diaphragm ⑨ closes the air passage from #2 pilot air jet ⑤, therefore, the fuel/air mixture becomes rich with fuel.
This system is to keep the combustion condition constant by varying the fuel/air mixture ratio by controlling air flow from the pilot air jet.

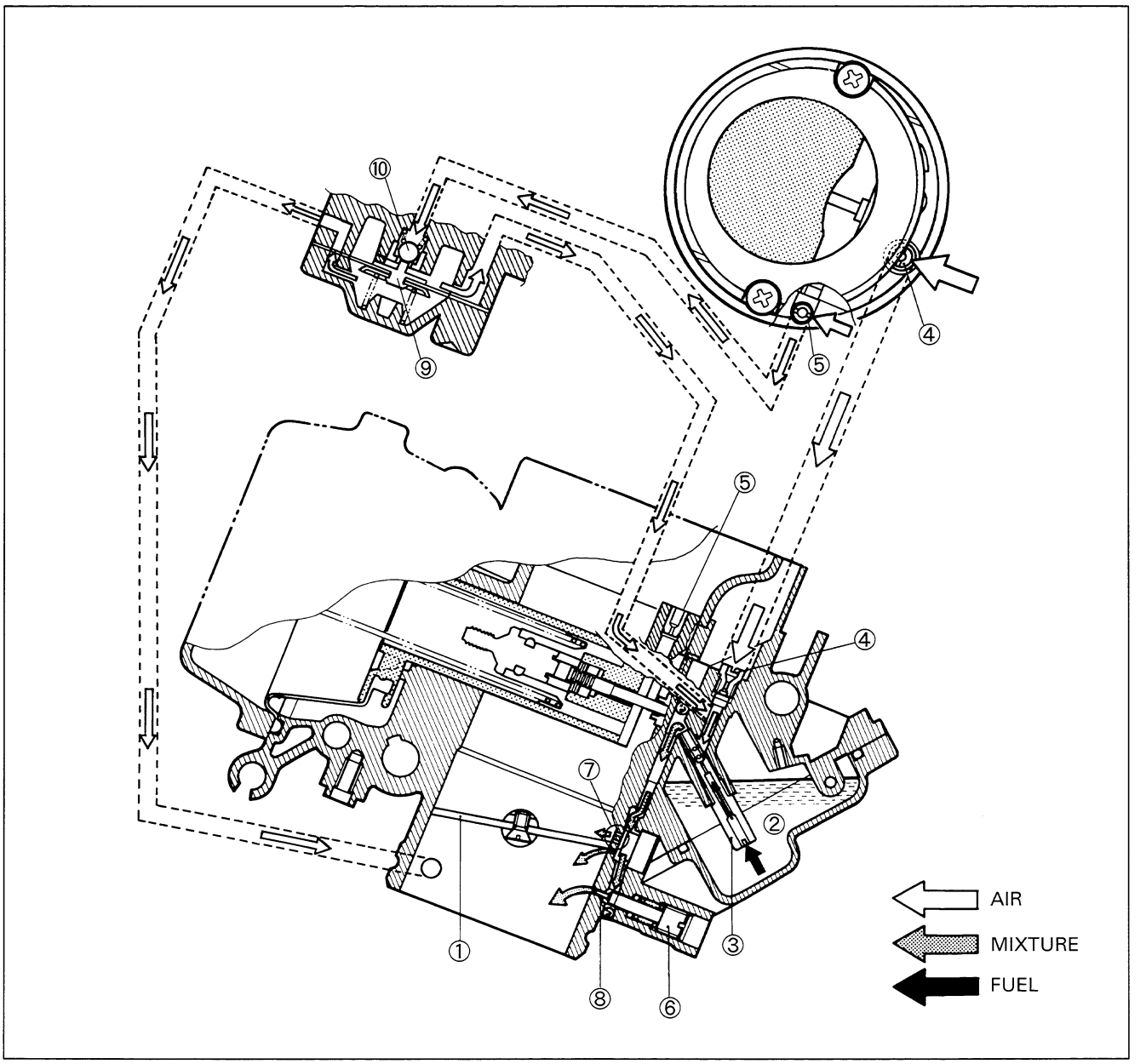

## MAIN SYSTEM

As the throttle valve ① is opened, engine speed rises and negative pressure in the venturi Ⓐ increases. This causes the piston valve ② moves upward.

The fuel in the float chamber ③ is metered by the main jet ④. The metered fuel passes around main air bleed pipe ⑤, mixes with the air admitted through main air jet ⑥ to form an emulsion and emulsion fuel enters needle jet ⑦.

The emulsified fuel then passes through the clearance between the needle jet ⑦ and jet needle ⑧ and is discharged into the venturi Ⓐ, where it meets the main air stream being drawn by the engine.

Mixture proportioning is accomplished in the needle jet ⑦. The clearance through which the emulsified fuel must flow ultimately depends on throttle position.

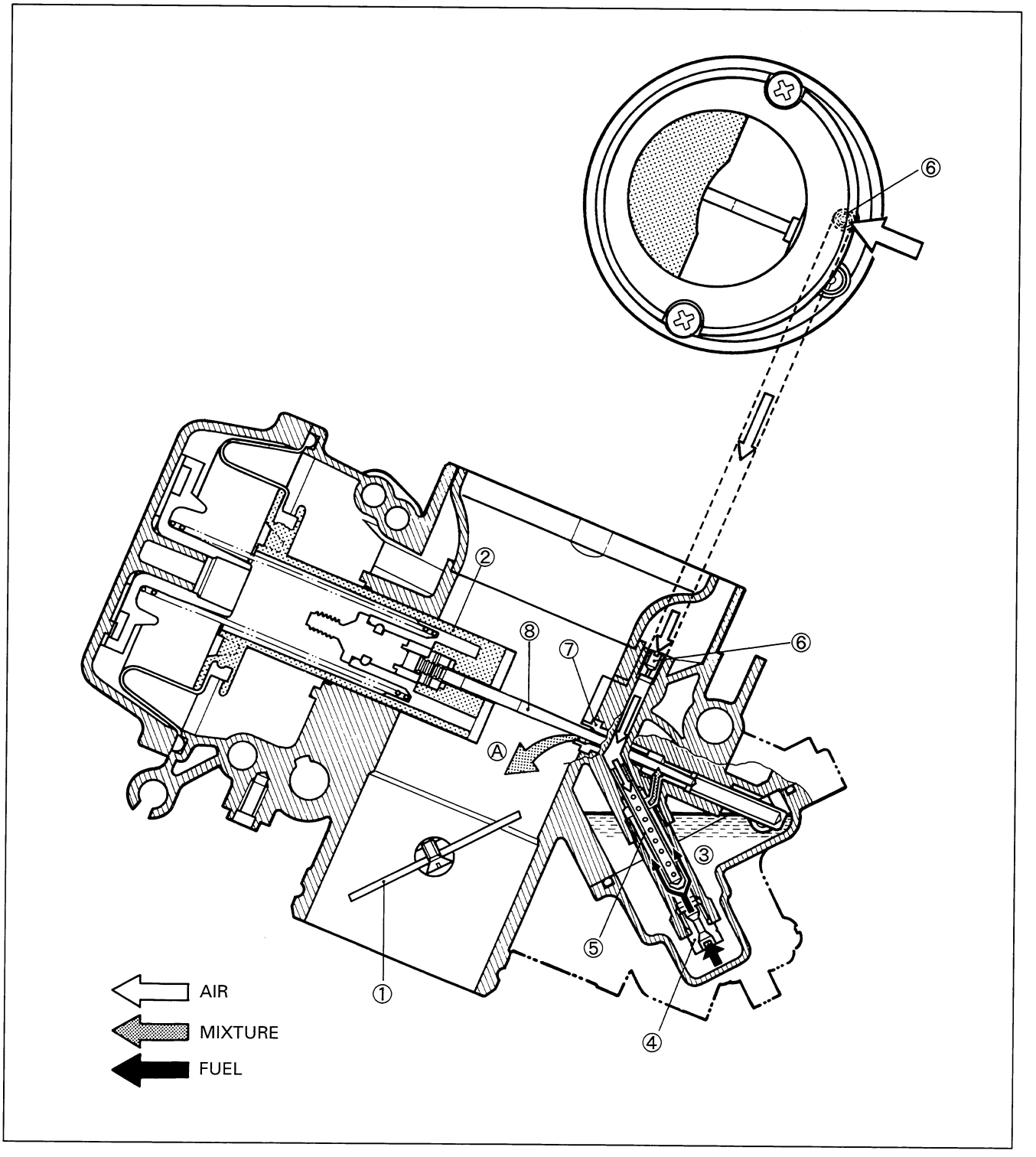

## STARTER (ENRICHER) SYSTEM

Pulling the starter (enricher) plunger ① causes fuel to be drawn into the starter circuit from the float chamber ②.

The starter jet ③ meters this fuel. The fuel then flows into the fuel pipe ④ and mixes with the air coming from the float chamber ②. The mixture, rich in fuel, reaches starter plunger ① and mixes again with the air coming through starter air jet ⑥ from the diaphragm chamber.

The three successive mixings of the fuel with the air provided the proper fuel/air mixture for starting. This occurs when the mixture is sprayed through the starter outlet port ⑤ into the main bore.

*NOTE:*

*A starter (enricher) system is operated almost the same way as a choke.*

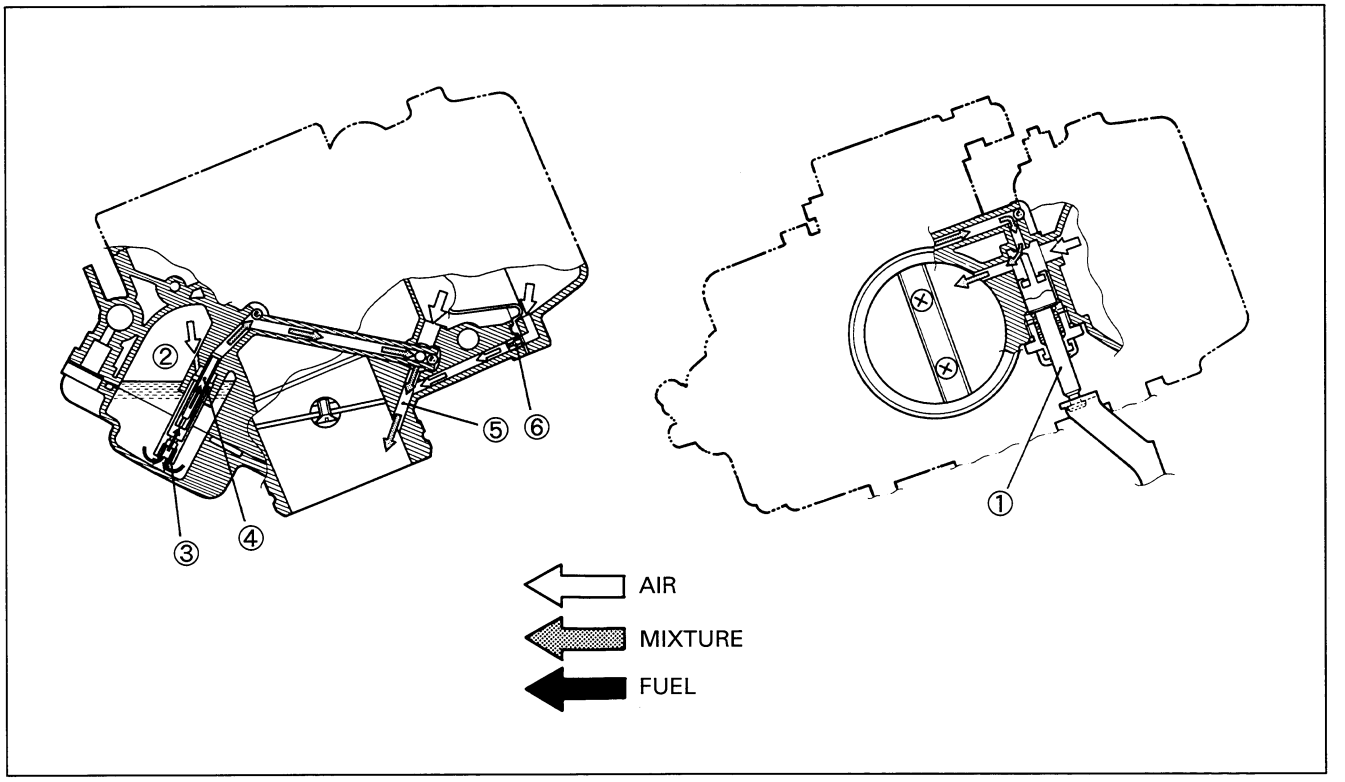


## FLOAT SYSTEM

The float ① and needle valve ② work in conjunction with one another. As the float ① moves up and down, so does the needle valve ②.

When there is a high fuel level in float chamber ③, the float ① rises and the needle valve ② pushes up against the valve seat. When this occurs, no fuel enters the float chamber ③.

As the fuel level falls, the float ① lowers and the needle valve ② unseats itself; admitting fuel into the float chamber ③.

In this manner, the needle valve ② admits and shuts off fuel to maintain the appropriate fuel level inside the float chamber ③.

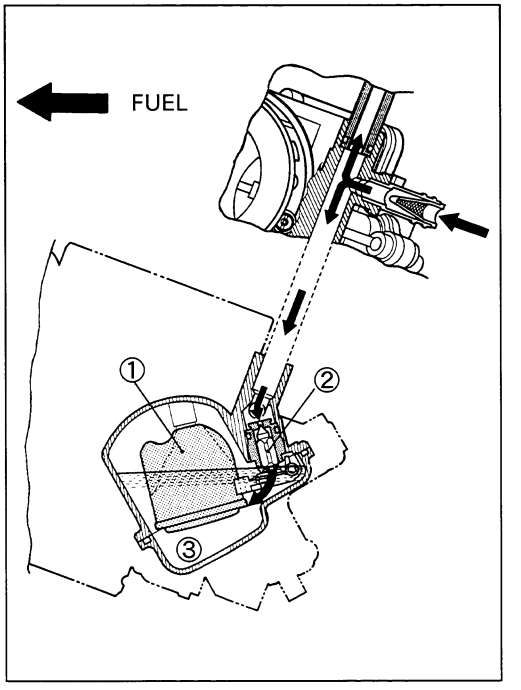

## REMOVAL

- Remove the seat ①. (See p. 6-2.)
- Remove the meter and fuel inlet cover ②. (See pp. 6-3 and -4.)
- Remove the frame head covers ③ and the upper covers ④. (See pp. 6-2 and -3.)

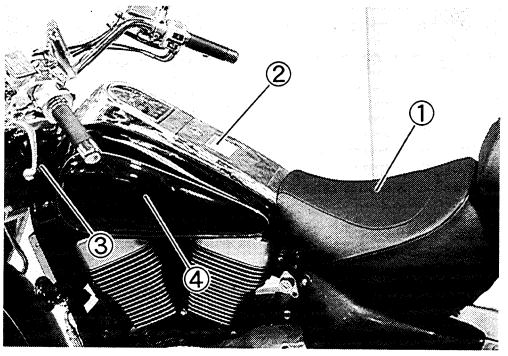


- Loosen the carburetor clamp screws (air cleaner side).

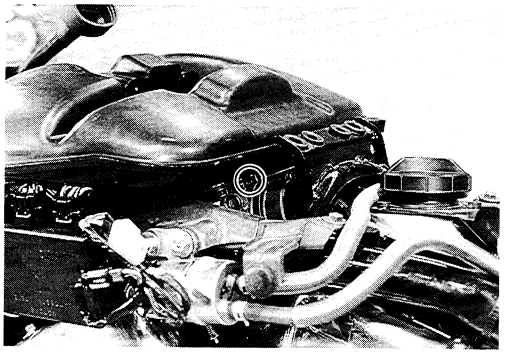

- Disconnect the breather hose.
- Remove the air cleaner box.

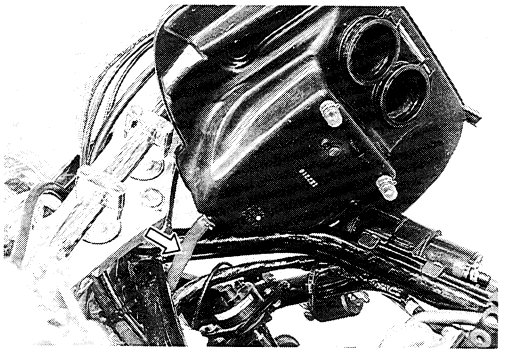

- Disconnect the fuel hose and the throttle position sensor coupler.
- Remove the throttle cables.

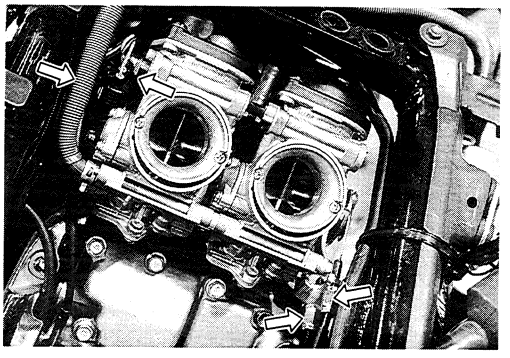

- Loosen the carburetor clamp screws (Engine side).

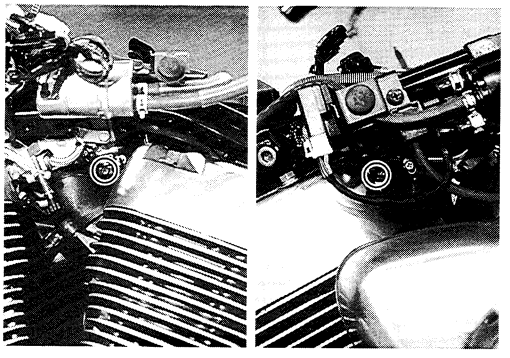

- Disconnect the starter cable.
- Remove the carburetor assembly.

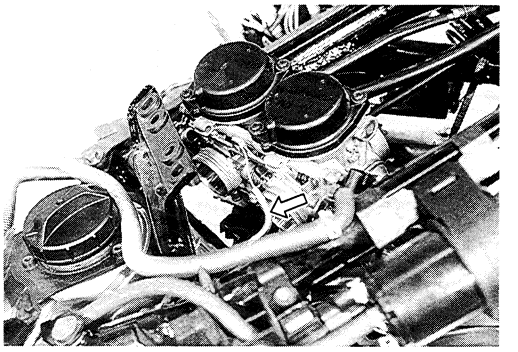

## DISASSEMBLY

Before disassembly, prepare a clean and well lit work place where carburetor components can be laid out neatly and will not get lost. Study the service manual carburetor diagram and familiarize yourself with component locations and the different fuel circuits and their routing through the carburetor.

**⚠ CAUTION**

**Prior to disassembly, mark with a paint or notch the initial position of the throttle sensor which is PRE-SET accurately at the factory.**
**Avoid removing the throttle position sensor from the carburetor body unless you really need to do so.**

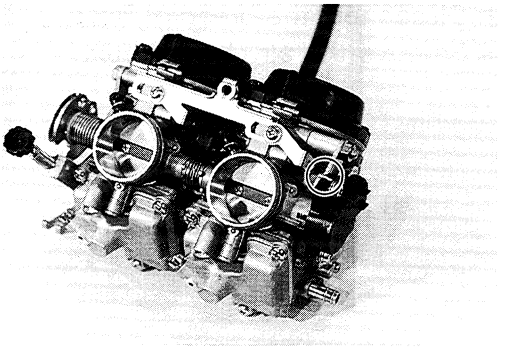

- Disconnect the air vent hoses ①.

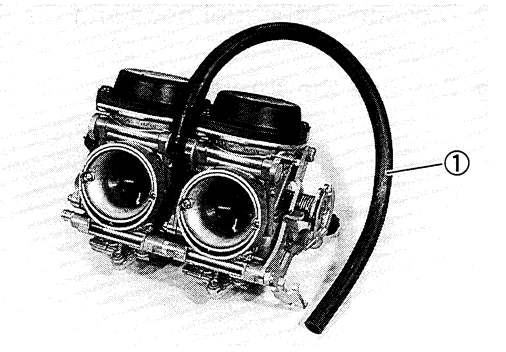

- Remove the starter (enricher) plate ① by removing the fitting screws.

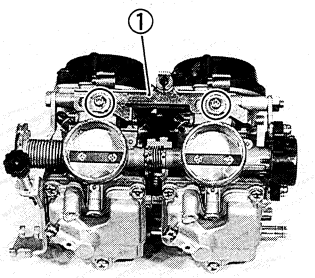


- Remove the upper and lower carburetor connecting bolts and nut.
- Separate the carburetor assembly.

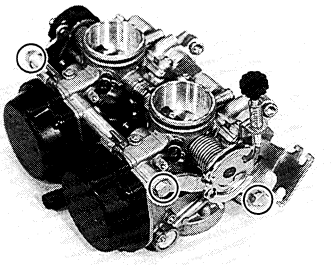

- Remove the carburetor top cap ②.

**⚠ CAUTION**

**Do not use compressed air on the carburetor body, before removing the diaphragm; this may damage the diaphragm.**

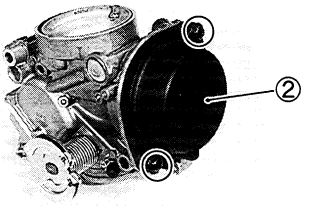


- Remove the spring ③ and the piston valve along with its diaphragm ④.
- Remove the O-ring ⑤.

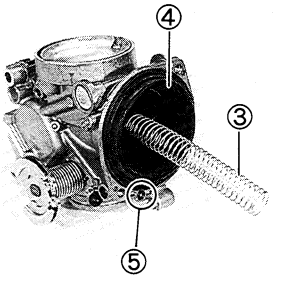


- Remove the jet needle from the piston valve.

⑥ Piston valve
⑦ Jet needle
⑧ Spacer
⑨ E-ring
⑩ Washer
⑪ Spring
⑫ O-ring
⑬ Jet needle stopper

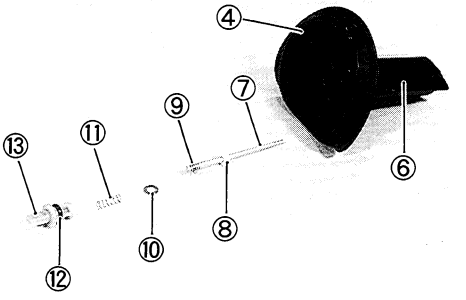

- Remove the float chamber ①.

**TOOL 09900-09004: Impact driver set**

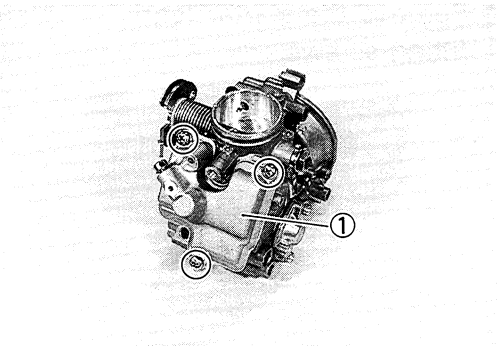


- Remove the O-ring ②.

**⚠ CAUTION**

**Use a new O-ring to prevent fuel leakage.**

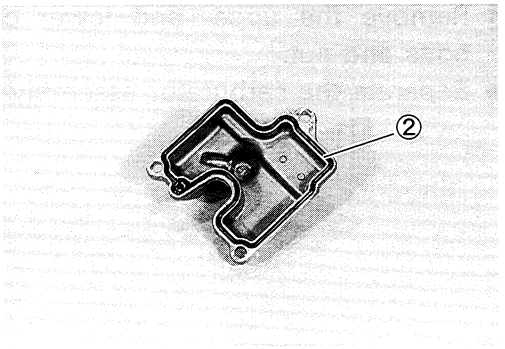


- Remove the float ③ and needle valve ④ by removing the float pin.

**⚠ CAUTION**

**Do not use a wire to clean the valve seat.**

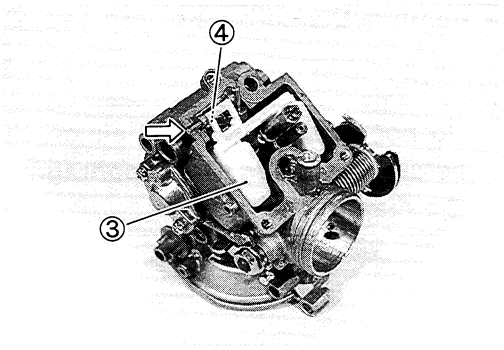


- Remove the main jet ⑤, main jet holder ⑥, valve seat ⑦ and pilot jet ⑧.

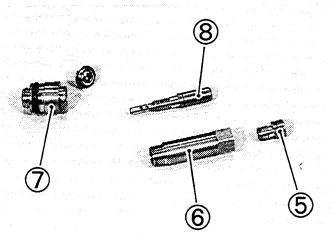


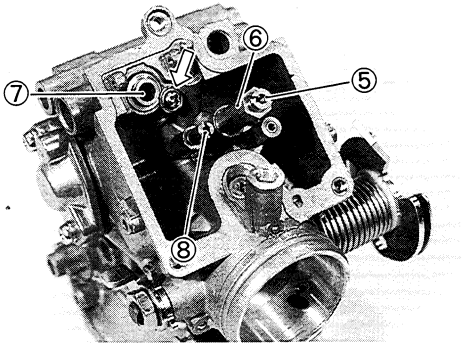


- Remove the starter (enricher) plunger assembly ⑨.

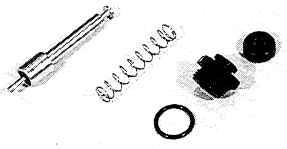

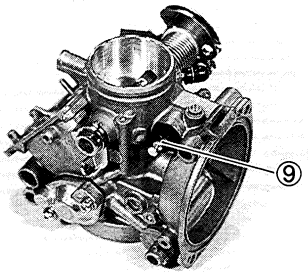

- Use a 1/8" size drill bit with a drill-stop to remove the pilot screw plug. Set the drill-stop 6 mm from the end of the bit to prevent drilling into the pilot screw. Carefully drill through the plug.
  Thread a self-tapping sheet metal screw into the plug. Pull on the screw head with pliers to remove the plug. Carefully clean any metal shavings from the area. (For E-18 and 33 models)

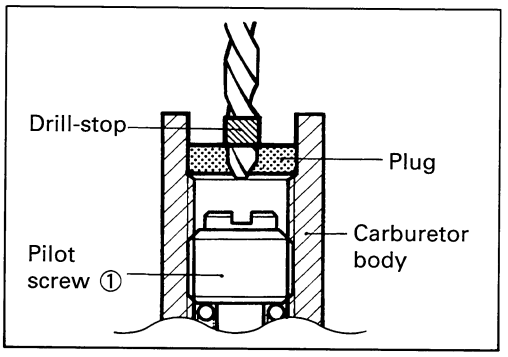


**▲ CAUTION**

**Replace the plug with a new one.**

- Slowly turn the pilot screw ① in clockwise and count the number of turns until the screw is lightly seated. Make a note of how many turns were made so the screw can be reset correctly after cleaning.

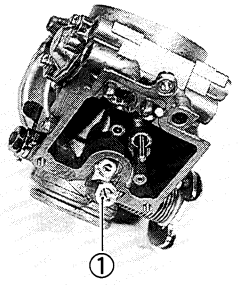


- Remove the pilot screw ① with the spring ②, washer ③, and O-ring ④.

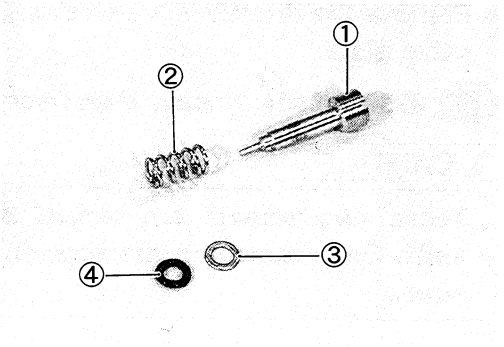


- Remove the funnel ⑤.

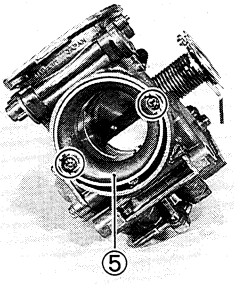


- Remove the pilot air jets ⑥.

**▲ CAUTION**

**Do not use a wire for cleaning the passage and jets.**

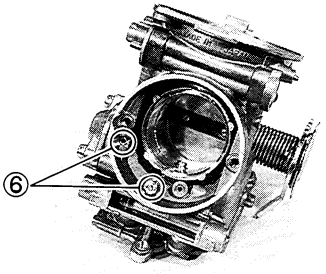

- Remove the casting valve cover.

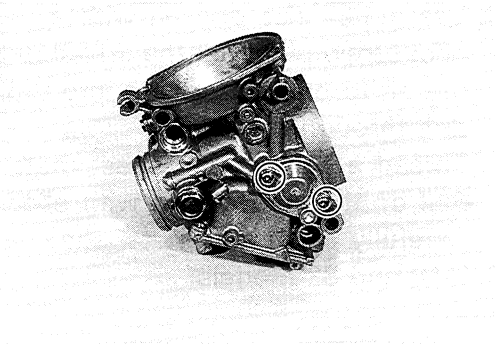

- Remove the casting valve ① and the spring ②.

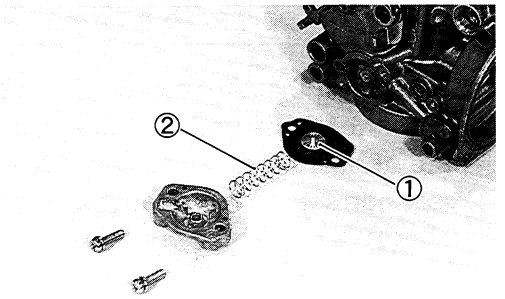


- Remove the throttle valve screws ③ and pull out throttle valve plate.

**TOOL 09900-09004: Impact driver set**

**⚠ CAUTION**

**These two screws are locked by punching these ends. Once removing the screws, they will be damaged.**

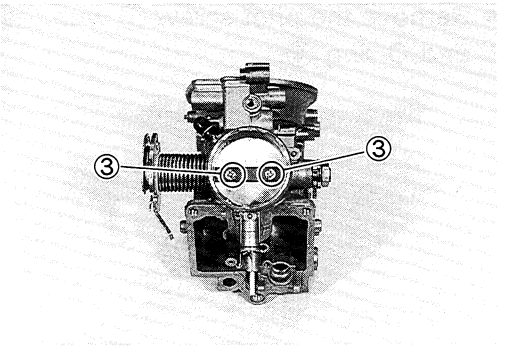

## CARBURETOR CLEANING

**⚠WARNING**

**Some carburetor cleaning chemicals, especially dip-type soaking solutions, are very corrosive and must be handled carefully. Always follow the chemical manufacturer's instructions on proper use, handling and storage.**

- Clean all jets with a spray-type carburetor cleaner and dry them using compressed air.
- Clean all circuits of the carburetor thoroughly – not just the perceived problem area. Clean the circuits in the carburetor body with a spray-type cleaner and allow each circuit to soak if necessary to loosen dirt and varnish. Blow the body dry using compressed air.

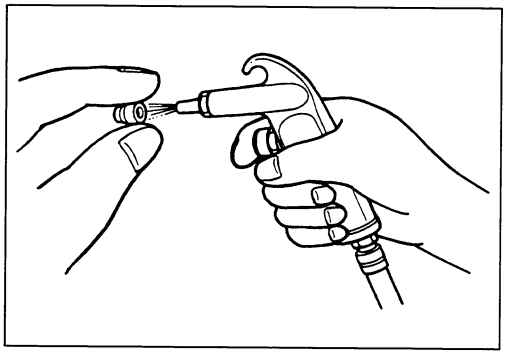

**⚠ CAUTION**

**Do not use a wire to clean the jets or passageways. A wire can damage the jets and passageways. If the components cannot be cleaned with a spray cleaner, it may be necessary to use a dip-type cleaning solution and allow them to soak. Always follow the chemical manufacturer's instructions for proper use and cleaning of the carburetor components.**

- After cleaning, reassemble the carburetor with new seals and gaskets.

## CARBURETOR INSPECTION

Check the following items for any damage or clogging.

* Pilot jet
* Main jet
* Main air jet
* Pilot air jets
* Needle jet air bleeding hole
* Float
* Needle valve
* Jet needle
* Valve seat
* Piston valve
* Starter (enricher) jet
* Gasket and O-ring
* Throttle shaft oil seal
* Pilot outlet and by-pass ports
* Coasting valve

### NEEDLE VALVE INSPECTION

If foreign matter is caught between the valve seat and the needle valve, the gasoline will continue flowing and overflow. If the valve seat and needle valve are worn beyond the permissible limits, similar trouble will occur. Conversely, if the needle valve sticks, the gasoline will not flow into the float chamber. Clean the float chamber and float parts with gasoline. If the needle valve is worn, as shown in the illustration, replace it along with a new valve seat. Clean the fuel passage of the mixing chamber using compressed air.

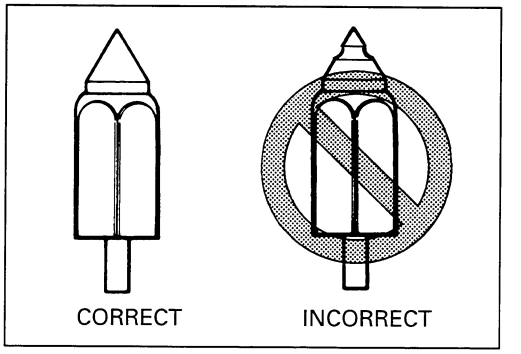

### FLOAT HEIGHT ADJUSTMENT

- Measure the float height Ⓐ by using a calipers with the carburetor slanting at an angle of 45° (as shown in the right illustration) and the float arm just contacting the needle valve.
- Bend the tongue Ⓑ of the float arm as necessary to bring the height Ⓐ to the specified value.

**Float height Ⓐ: 7.0±0.5 mm (0.28±0.02 in)**

**TOOL 09900-20102: Vernier calipers**

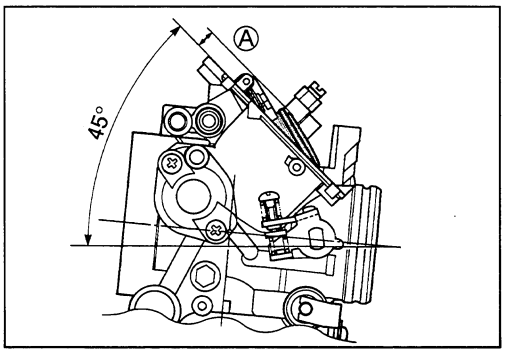


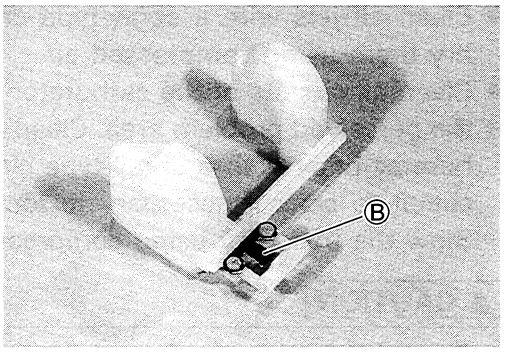


### THROTTLE POSITION SENSOR INSPECTION

Using a tester, measure the resistance between the terminals as shown in the right illustration.

**Throttle position sensor resistance: 3.5–6.5 kΩ**

*NOTE:*
*When making above test, it is not necessary to remove the throttle position sensor.*

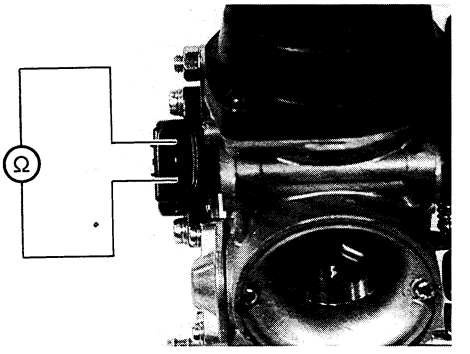


## REASSEMBLY AND REMOUNTING

Reassemble and remount the carburetors in the reverse order of disassembly and removal. Pay attention to the following points:

### THROTTLE VALVE

- Set each throttle valve in such a way that its bottom end ① meets the foremost by-pass ②. This is accomplished by turning the throttle stop screw and throttle valve balance screw.
- Apply a small quantity of THREAD LOCK "1342" to the throttle valve mounting screws and tighten it to the specified torque.

**1342 99000-32050: THREAD LOCK "1342"**

**Throttle valve mounting screw: 1.0 N·m (0.1 kg-m, 0.7 lb-ft)**

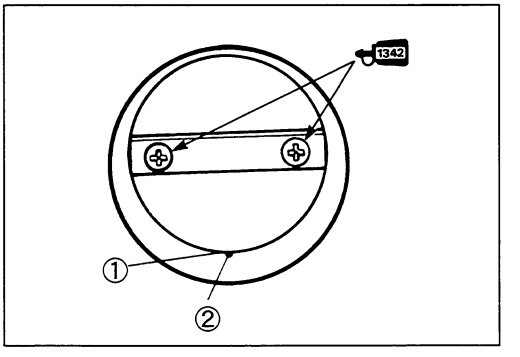


**⚠ CAUTION**

**Face the stamped side of throttle valve to outside.**

### COASTING VALVE

- When installing the coasting valve to the body, align the hole Ⓐ of the diagram and air hole Ⓑ of the cover.

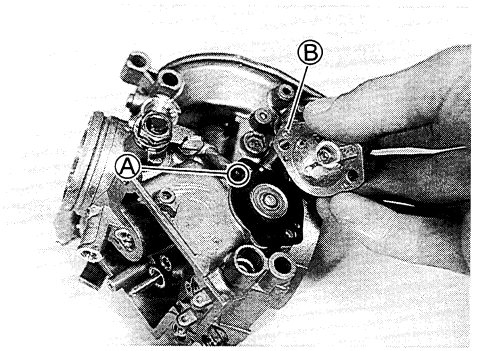


### FUNNEL

- Apply a small quantity of THREAD LOCK "1342" to the funnel stopper screws and tighten them.

**1342 99000-32050: THREAD LOCK "1342"**

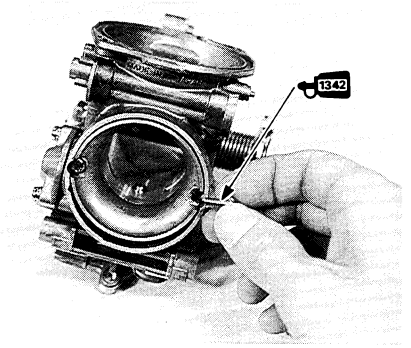


### PILOT SCREW

- After cleaning, reinstall the pilot screw to the original setting by turning the screw in until it lightly seats, and then backing it out the same number of turns counted during disassembly.
- Install new plug ① by tapping it into place with a punch. (For E-18 and 33 models.)

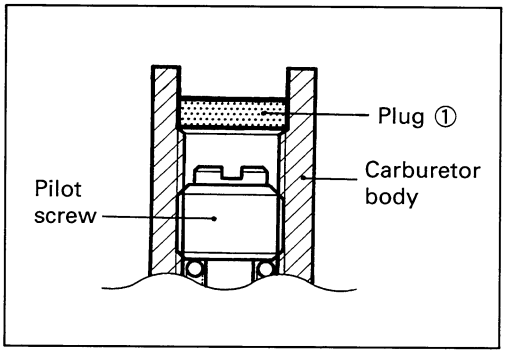


**⚠ CAUTION**

**Replace the O-ring with a new one.**

### STARTER PLUNGER

Apply a small quantity of grease to the starter plunger O-ring.

**A H 99000-25010: SUZUKI SUPER GREASE "A"**

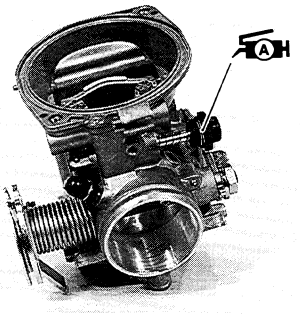


**⚠ CAUTION**

**Replace the O-rings with new ones.**

### CARBURETOR TOP CAP

- Before installing the carburetor top cap, install the O-ring ②.
- Align the protrusion Ⓒ of the carburetor top cap with the O-ring ②.

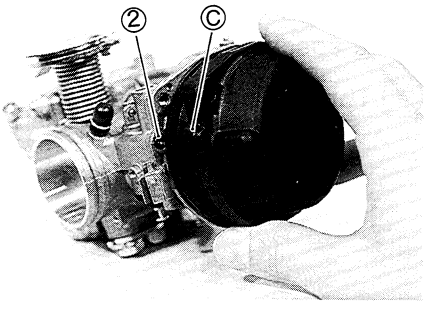

## CARBURETOR ENGAGING

When engaging carburetors, pay attention to the following points:

- Apply a small quantity of grease to the fuel joint pipe O-rings.

**99000-25010: SUZUKI SUPER GREASE "A"**

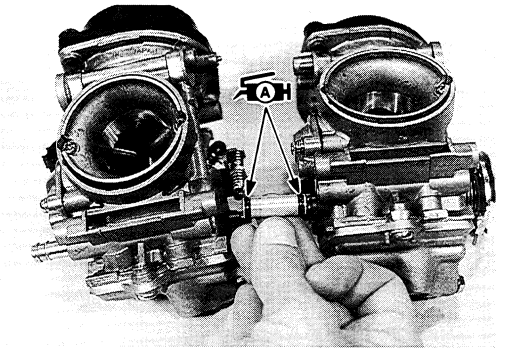

- Position the throttle valve control lever ① correctly.

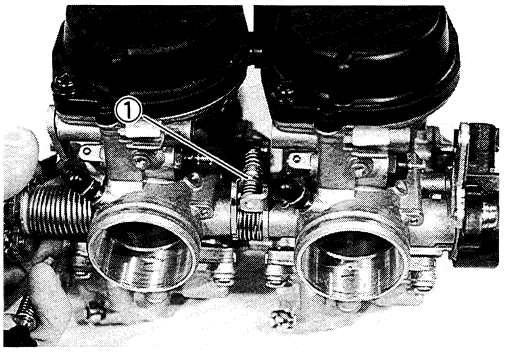


## THROTTLE POSITION SENSOR POSITIONING

When removing the throttle position sensor from the carburetor body, install it to the exact position mentioned below;

- Measure the resistance Ω1 between terminals of the throttle position sensor as shown in the right illustration.

**Throttle position sensor resistance Ω1: 3.5–6.5 kΩ**

- Measure the resistance Ω2 between terminals of the throttle position sensor as shown in the right illustration.
- Open the throttle valve fully by turning the throttle lever.
- Under above condition, see the throttle position sensor angle to have the resistance Ω2 as 76% of the resistance Ω1.

**For example: When Ω1 is 5 kΩ, Ω2 should be 3.8 kΩ.**

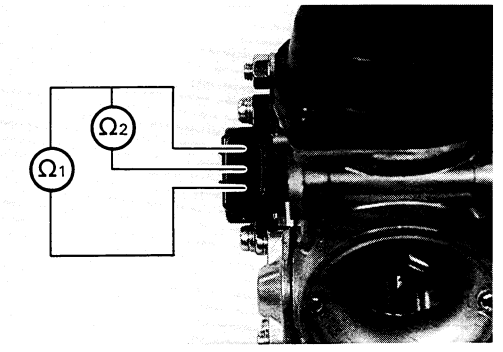


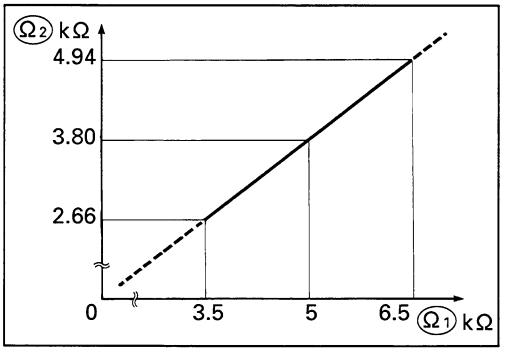


- When reading the above-mentioned resistance as Ω2, tighten the throttle position sensor mounting screws to the specified torque.

**Throttle position sensor mounting screw:**
**3.5 N·m (0.35 kg-m, 2.5 lb-ft)**

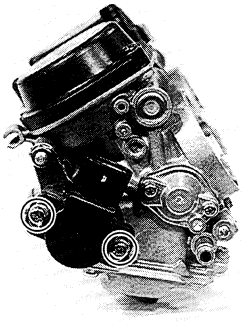

## CARBURETOR CLAMPS

Locate the carburetor clamps as shown in the right illustrations.

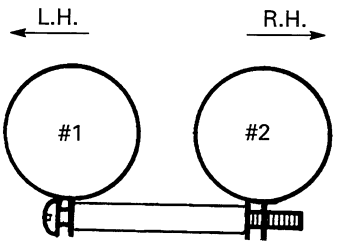


Carburetor clamp position
(Air cleaner box side)

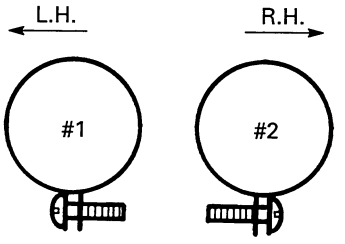


Carburetor clamp position
(Engine side)

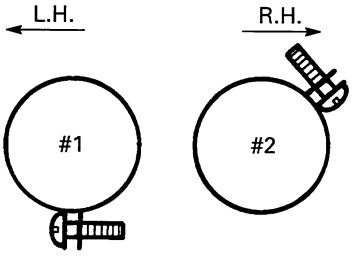


Carburetor clamp position
(Engine side) Only for E-33

- After all of the work has been completed, install the carburetor assembly onto the engine and perform the following adjustments.
  * Engine idle speed ..... See p. 2-8.
  * Throttle cable play ..... See p. 2-10.
  * Carburetor synchronization ..... See pp. 5-27 to -29.

# CARBURETOR SYNCHRONIZATION

Check and adjust the carburetor synchronization between the two carburetors as follows.

*NOTE:*
*Keep the air cleaner box removing while performing this procedure.*

## CALIBRATING EACH GAUGE

- Remove the seat ①. (See p. 6-2.)
- Remove the meter and fuel inlet cover. (See pp. 6-3 and -4.)
- Remove the frame head covers and the upper covers. (See p. 6-3.)
- Start up the engine and run it in idling condition for warming up.
- Stop the warmed-up engine.
- Remove the air cleaner box. (See p. 5-16.)
- Remove the vacuum inlet cap ② from the carburetor (#1).

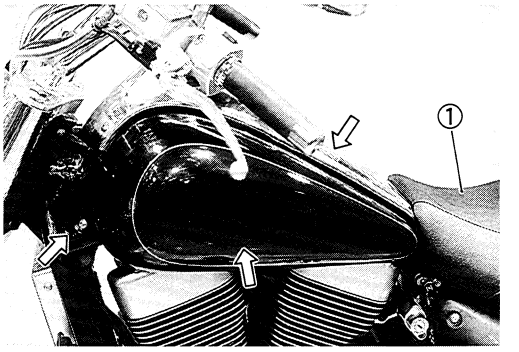


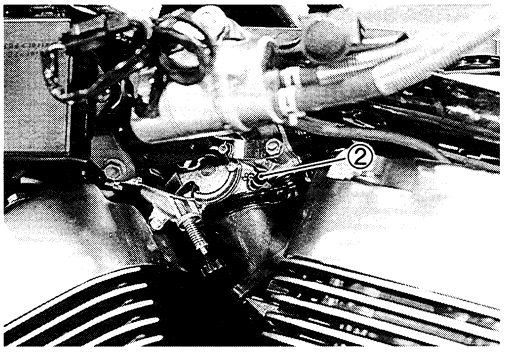


- Connect one of the four rubber hoses of carburetor balancer gauge to this inlet.

**TOOL 09913-13121: Carburetor balancer**

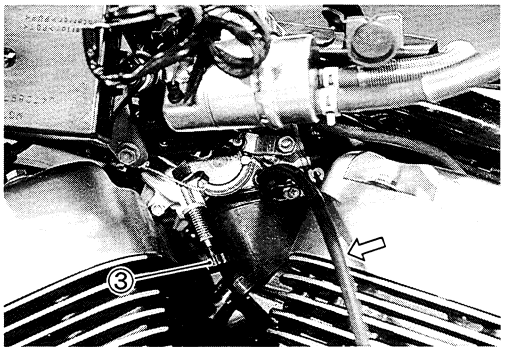


- Start up the engine and keep it running at 1 750 r/min by turning throttle stop screw ③.

*NOTE:*
*The engine speed can be observed by using the multi circuit tester.*

**TOOL 09900-25008: Multi circuit tester set.**

**⚠ CAUTION**

**Avoid drawing dirt into the carburetor while running the engine without air cleaner box. Dirt drawn into the carburetor will damage the internal engine parts.**

- Turn the air screw ① of the gauge so that the vacuum acting on the tube of that hose will bring the steel ball ② in the tube to the center line ③.

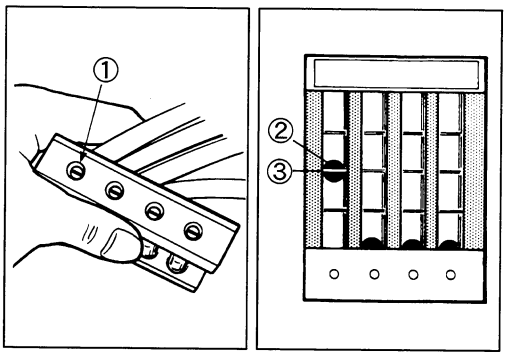


- After making sure that the steel ball stays steady at the center line, disconnect the hose from nipple and connect the next hose to the inlet.
- Turn air screw to bring the other steel ball ④ to the center line.
- The balancer gauge is now ready for use in balancing the carburetors.

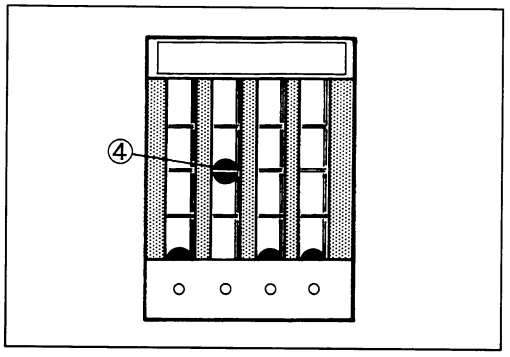


**CARBURETOR SYNCHRONIZATION**

- Remove the carburetor assembly to connect carburetor balancer hoses to carburetor vacuum inlets.
- Remove the vacuum inlet cap from the carburetor (#2).

*NOTE:*
*Place a rag over the intake pipes to prevent any parts dropping into the combustion chamber.*

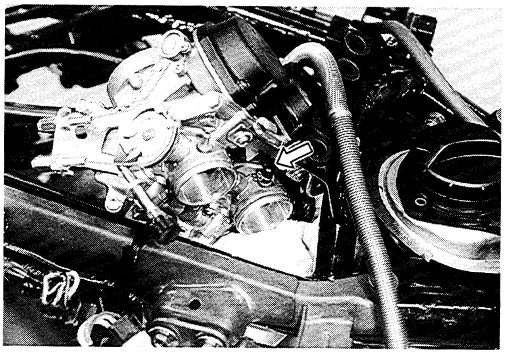

- Connect the balancer gauge hoses to vacuum inlets respectively.
- Install the carburetor assembly properly.

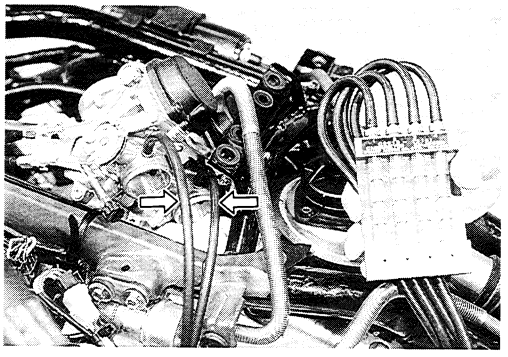

Adjust the balance of four carburetors as follows:

- Start the engine and keep it running at 1 750 r/min.

*NOTE:*
*The engine speed can be observed by using the multi circuit tester.*

**TOOL 09900-25008: Multi circuit tester set**

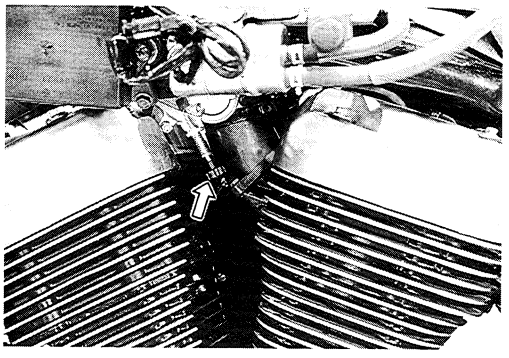

**⚠ CAUTION**

**Avoid drawing dirt into the carburetor while running the engine without air cleaner box. Dirt drawn into the carburetor will damage the internal engine parts.**

When the steel balls in tubes #1 and #2 are at the same level, the carburetor is correctly adjusted.

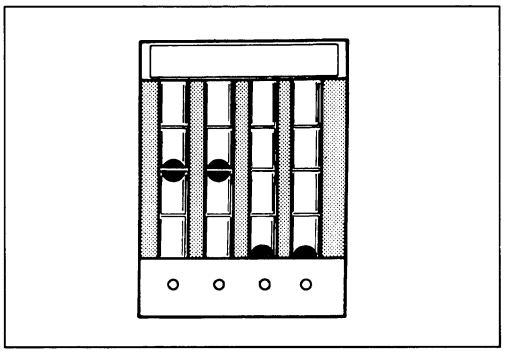

- If the steel balls are not at the same level, adjust the throttle valve synchronizing screws ①.

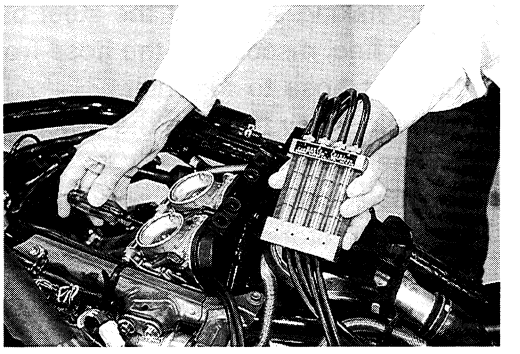

**⚠ WARNING**

**A hot engine can burn you if you touch the engine. The engine will still be hot for sometime after stopping the engine.**

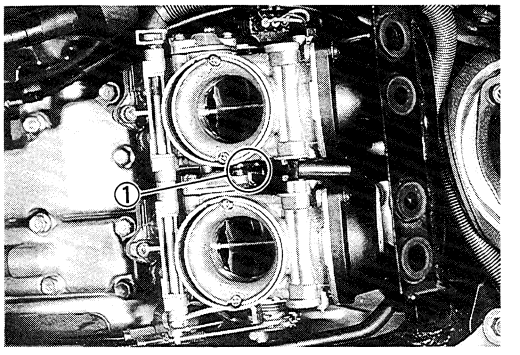


- After completing the carburetor synchronization, remove the carburetor assembly.
- Remove the balancer gauge hose from carburetor inlets and install inlet caps and vacuum hose respectively.
- Reinstall the carburetor assembly onto the engine and air cleaner box onto the carburetor assembly respectively.

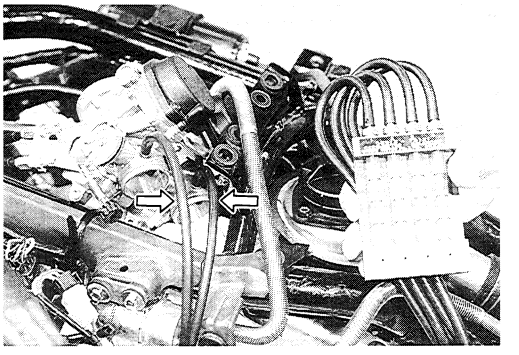

- Adjust the engine idle speed by turning the throttle stop screw.

**Engine idle speed**
**1 000 ± 50 r/min ..... for E-18 model**
**1 000 ± 100 r/min ..... for the other models**

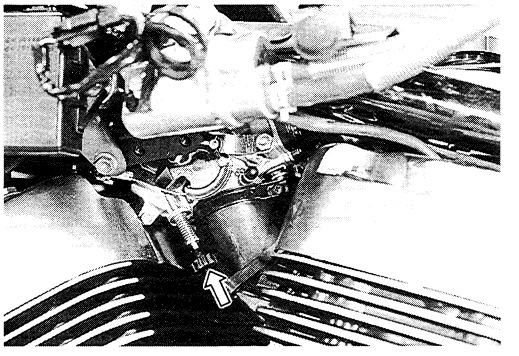

# CHASSIS

## CONTENTS


EXTERIOR PARTS ..... 6- 1
CONSTRUCTION ..... 6- 1
REMOVAL ..... 6- 2
REMOUNTING ..... 6- 4
FRONT WHEEL ..... 6- 5
CONSTRUCTION ..... 6- 5
REMOVAL ..... 6- 7
INSPECTION AND DISASSEMBLY ..... 6- 8
REASSEMBLY AND REMOUNTING ..... 6- 9
FRONT FORK ..... 6-11
CONSTRUCTION ..... 6-11
REMOVAL AND DISASSEMBLY ..... 6-12
INSPECTION ..... 6-15
REASSEMBLY AND REMOUNTING ..... 6-15
STEERING ..... 6-19
CONSTRUCTION ..... 6-19
REMOVAL AND DISASSEMBLY ..... 6-19
INSPECTION AND DISASSEMBLY ..... 6-22
REASSEMBLY AND REMOUNTING ..... 6-23
STEERING TENSION ADJUSTMENT ..... 6-26
REAR WHEEL ..... 6-27
CONSTRUCTION ..... 6-27
REMOVAL ..... 6-29
DISASSEMBLY ..... 6-30
INSPECTION AND DISASSEMBLY ..... 6-30
REASSEMBLY AND REMOUNTING ..... 6-31
REAR SUSPENSION ..... 6-33
CONSTRUCTION ..... 6-33
REMOVAL ..... 6-35
INSPECTION AND DISASSEMBLY ..... 6-37
REASSEMBLY ..... 6-39
REMOUNTING ..... 6-40
FRONT BRAKE ..... 6-43
CONSTRUCTION ..... 6-43
BRAKE PAD REPLACEMENT ..... 6-44
BRAKE FLUID REPLACEMENT ..... 6-44
BRAKE CALIPER REMOVAL AND DISASSEMBLY ..... 6-45
BRAKE CALIPER INSPECTION ..... 6-46
BRAKE CALIPER REASSEMBLY AND REMOUNTING ..... 6-46
BRAKE DISC INSPECTION ..... 6-47
MASTER CYLINDER REMOVAL AND DISASSEMBLY ..... 6-48
MASTER CYLINDER INSPECTION ..... 6-49
MASTER CYLINDER REASSEMBLY AND REMOUNTING ..... 6-49
REAR BRAKE ..... 6-51
CONSTRUCTION ..... 6-51
BRAKE PAD REPLACEMENT ..... 6-52
BRAKE FLUID REPLACEMENT ..... 6-52
BRAKE CALIPER REMOVAL AND DISASSEMBLY ..... 6-53
BRAKE CALIPER INSPECTION ..... 6-54
BRAKE CALIPER REASSEMBLY AND REMOUNTING ..... 6-54
MASTER CYLINDER REMOVAL AND DISASSEMBLY ..... 6-56
MASTER CYLINDER INSPECTION ..... 6-57
MASTER CYLINDER REASSEMBLY AND REMOUNTING ..... 6-57
CLUTCH RELEASE CYLINDER AND CLUTCH MASTER CYLINDER ..... 6-58
CONSTRUCTION ..... 6-58
CLUTCH FLUID REPLACEMENT ..... 6-59
CLUTCH RELEASE CYLINDER REMOVAL AND DISASSEMBLY ..... 6-59
CLUTCH RELEASE CYLINDER INSPECTION ..... 6-60
CLUTCH RELEASE CYLINDER REASSEMBLY AND REMOUNTING ..... 6-60
CLUTCH MASTER CYLINDER REMOVAL AND DISASSEMBLY ..... 6-62
CLUTCH MASTER CYLINDER INSPECTION ..... 6-63
CLUTCH MASTER CYLINDER REASSEMBLY AND REMOUNTING ..... 6-63
TIRES AND WHEELS ..... 6-65
TIRE REMOVAL ..... 6-65
INSPECTION ..... 6-67
TIRE INSTALLATION ..... 6-68

# EXTERIOR PARTS

## CONSTRUCTION

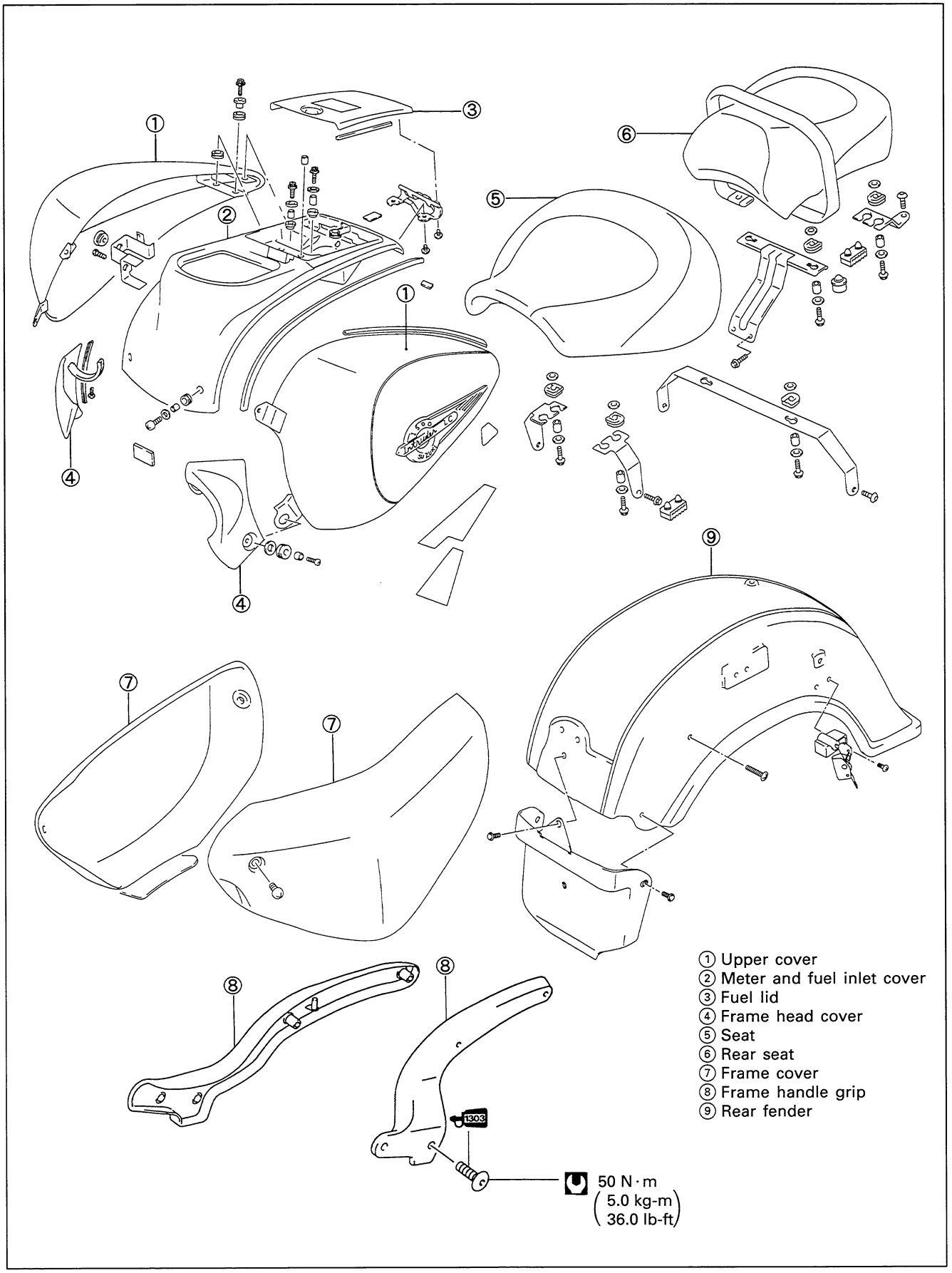

# REMOVAL

## SEAT

- Remove the seat by removing the bolts.

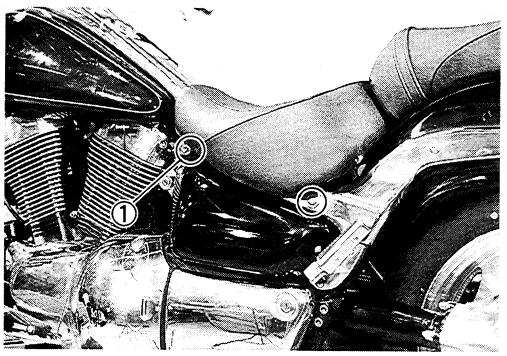


**⚠ CAUTION**

**Be careful not to scratch the frame covers.**

*NOTE: When tightening the seat mounting bolt ①, touch the starter knob bracket stopper Ⓐ to the seat mounting bracket.*

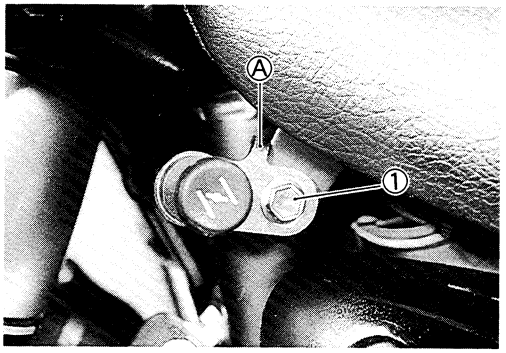


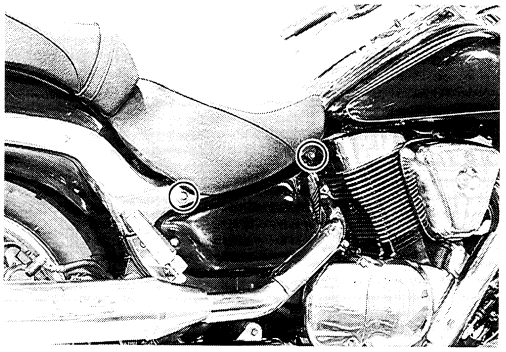

- Remove the rear seat by removing the bolts.

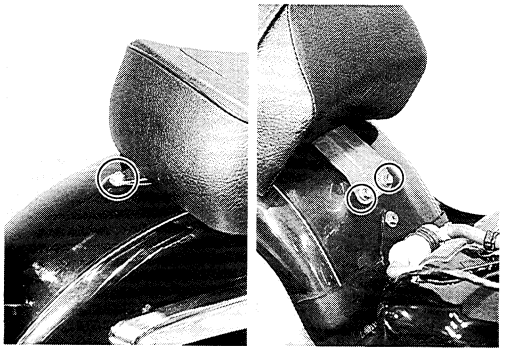

**⚠ CAUTION**

**Be careful not to scratch the rear fender.**

## FRAME COVER

- Remove the tool box outer cover ② with the ignition key.
- Remove the frame covers ③ by removing the bolts.

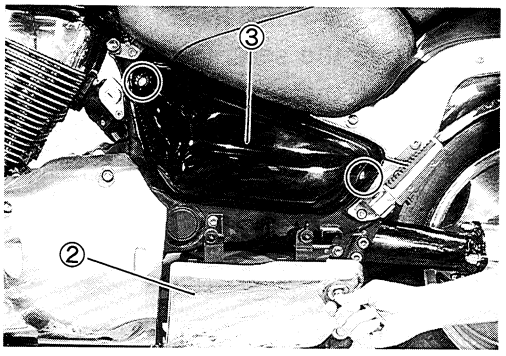


**⚠ CAUTION**

**Be careful not to scratch the frame covers.**

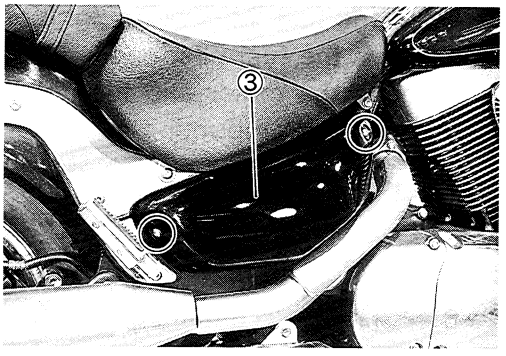

## FRAME HEAD COVER AND UPPER COVER

- Remove the left and right side frame head covers ① by removing the bolts ②.

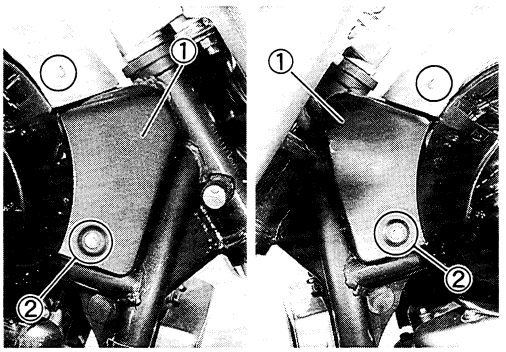


**⚠ CAUTION**

**Be careful not to scratch the frame.**

- Remove the meter and fuel inlet cover mounting bolts.

- Open the fuel lid with the ignition key.
- Remove the left and right side upper covers ③ by removing the bolts and screws.

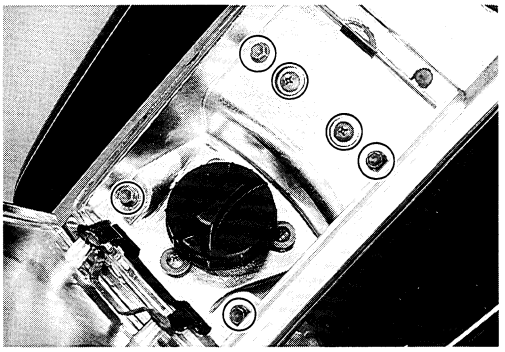

**⚠ CAUTION**

**Be careful not to scratch the upper covers.**

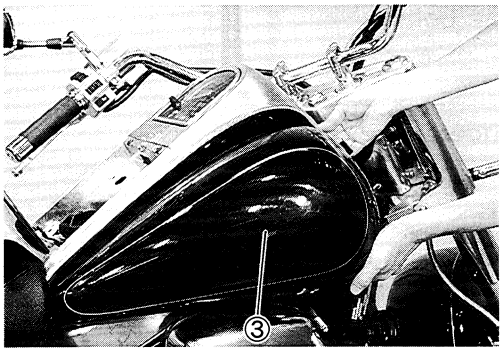


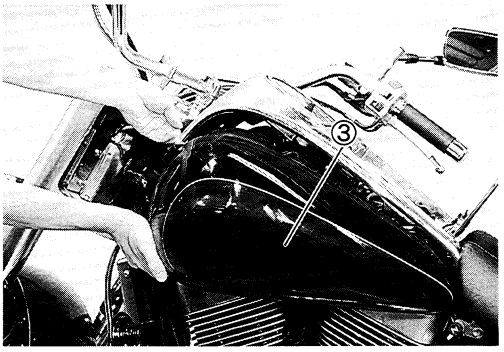


## METER AND FUEL INLET COVER

- Remove the seat. (See p. 6-2.).
- Remove the meter and fuel inlet cover mounting bolts.

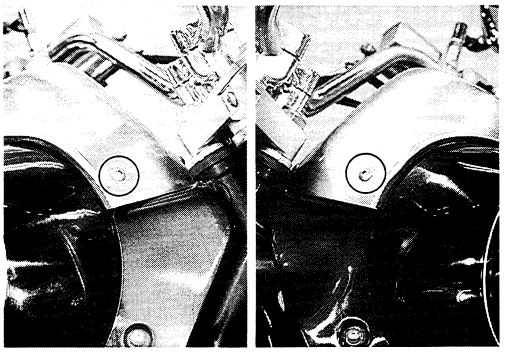

- Open the fuel lid with the ignition key.
- Remove the fuel filler cap.
- Remove the meter and fuel inlet cover mounting bolts and fuel inlet mounting screws.

*NOTE:*
*Do not drop the bolts and screws into the fuel tank.*

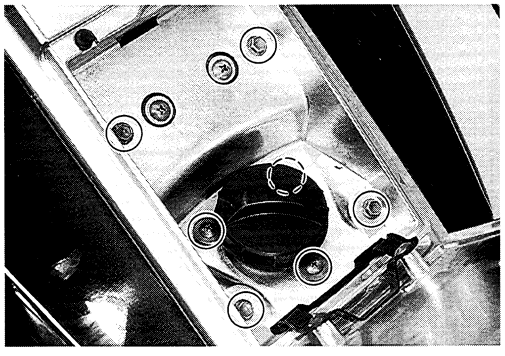

- Disconnect the meter coupler and remove the meter and fuel inlet cover.

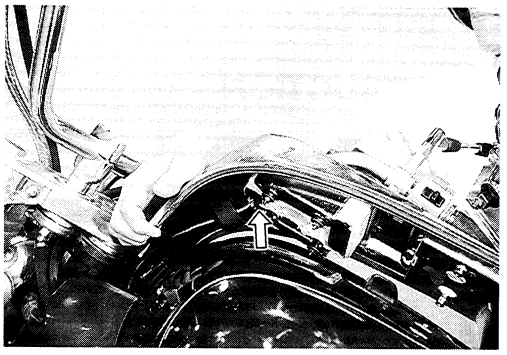

**⚠ CAUTION**

**Be careful not to scratch the upper covers.**

**REAR FENDER**

- Remove the seat. (See p. 6-2.)
- Disconnect the coupler ①.

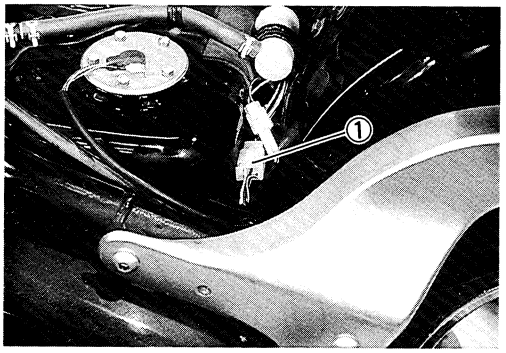


- Remove the left or right side frame handle grip.
- Remove the rear fender ③ by removing the other side frame handle grip bolts.

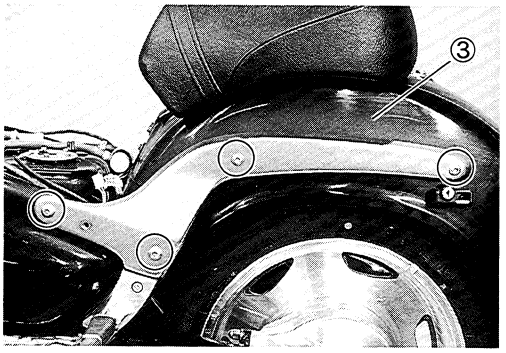


**⚠ CAUTION**

**Be careful not to scratch the frame covers and rear fenders.**

*NOTE:*
*When installing the frame handle grip bolts, apply a small quantity of THREAD LOCK "1303" to its mounting bolts and tighten them to the specified torque.*

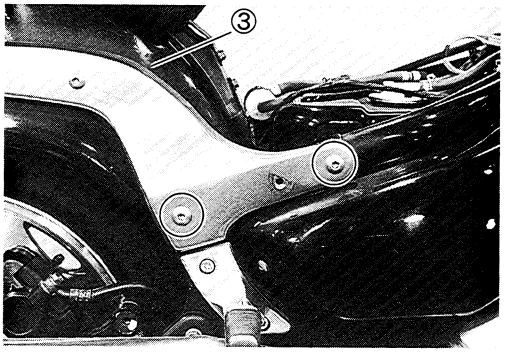


**1303 99000-32030: THREAD LOCK SUPER "1303"**

**Frame handle grip mounting bolt: 50 N·m (5.0 kg-m, 36.0 lb-ft)**

## REMOUNTING

Remount the seats, covers and rear fender in the reverse order of removal.

# FRONT WHEEL

## CONSTRUCTION

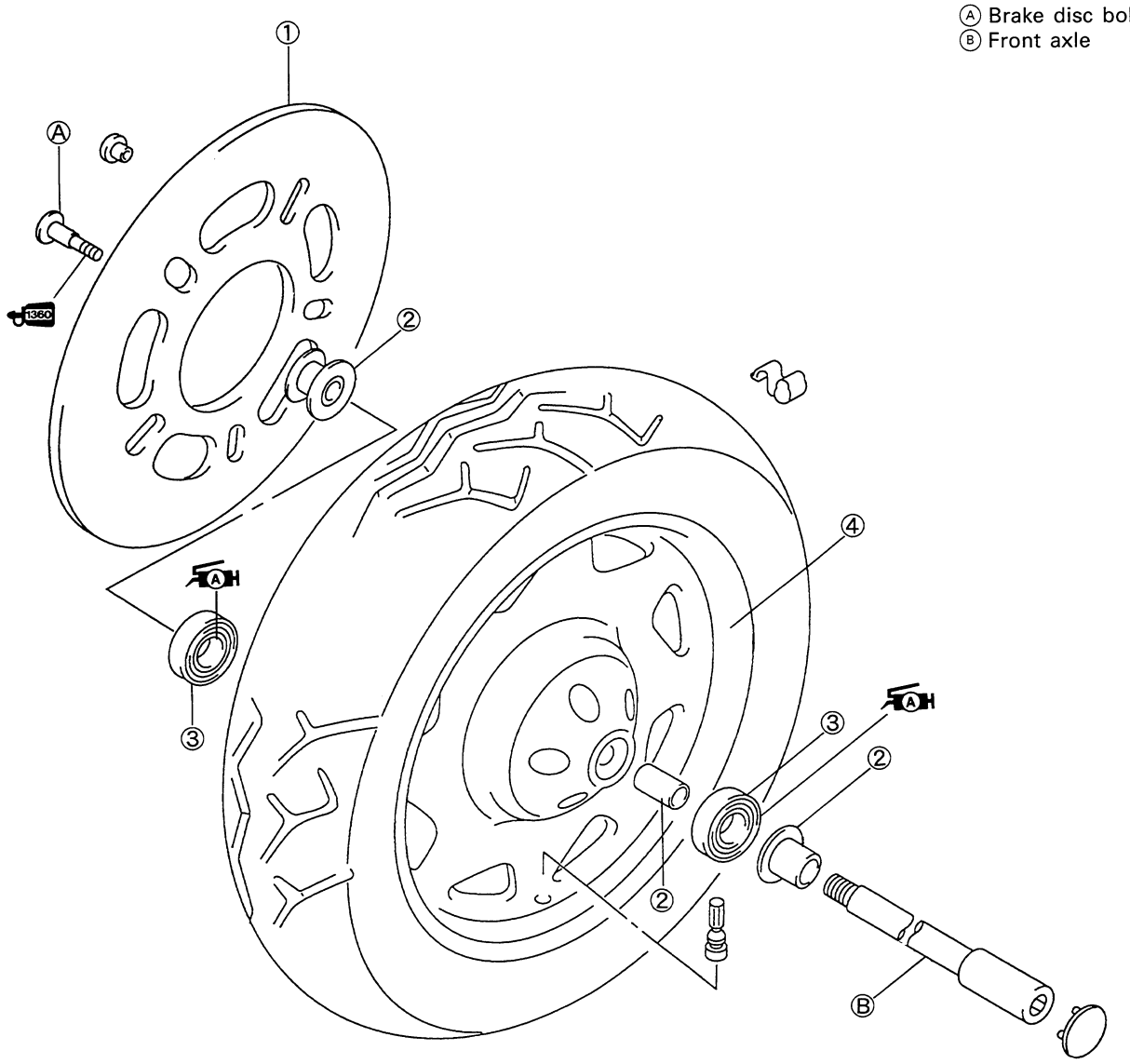


| ITEM | N·m | kg-m | lb-ft |
|---|---|---|---|
| Ⓐ | 23 | 2.3 | 16.5 |
| Ⓑ | 65 | 6.5 | 47.0 |

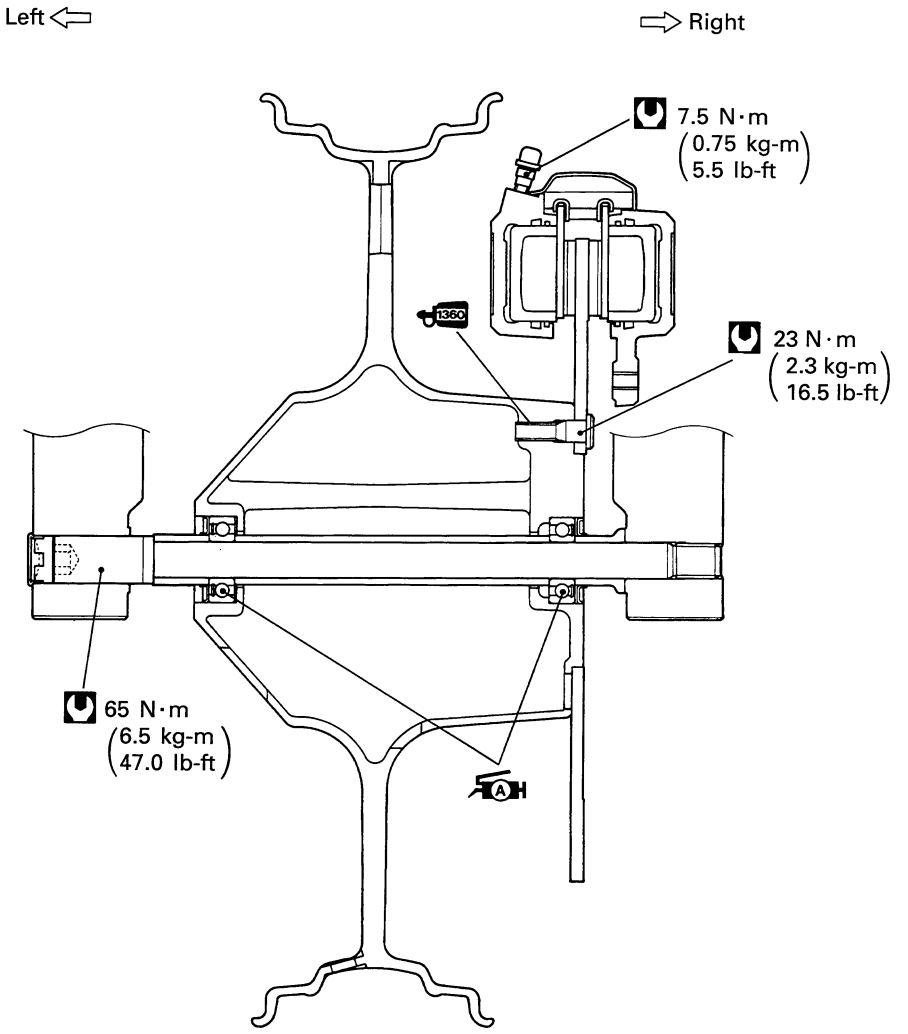
Left
Right
7.5 N·m
(0.75 kg-m
5.5 lb-ft)
1360
23 N·m
(2.3 kg-m
16.5 lb-ft)
65 N·m
(6.5 kg-m
47.0 lb-ft)
A
H

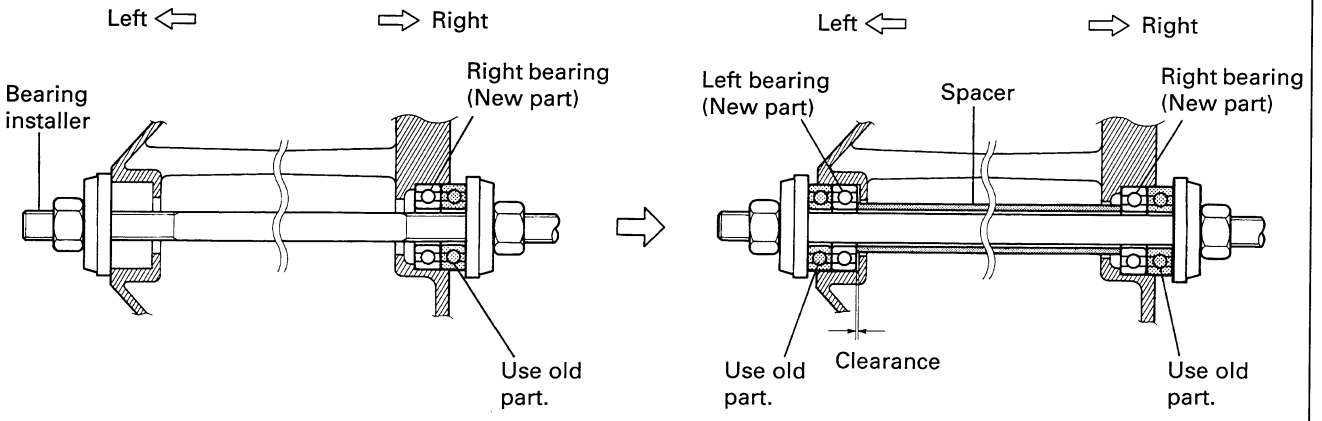
Left
Right
Bearing installer
Right bearing (New part)
Use old part.
Left
Right
Left bearing (New part)
Spacer
Right bearing (New part)
Use old part.
Clearance
Use old part.

## REMOVAL

- Remove the axle caps ①.

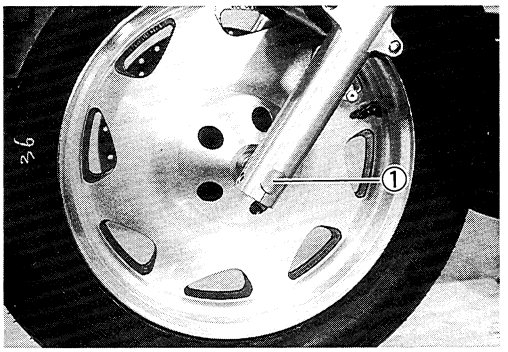


- Loosen the front axle pinch bolts ②.
- Loosen the front axle ③ by using the special tool.

**TOOL 09900-18710: Hexagon socket (12 mm)**

- Raise the front wheel off the ground with a jack or a wooden block.

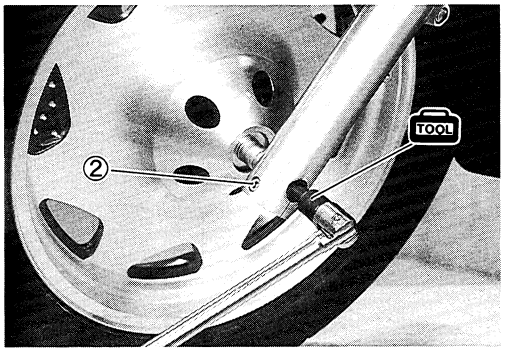


- Remove the front axle ③, spacers ④ and front wheel.

**⚠ CAUTION**

**Do not operate the brake lever during or after brake caliper removal.**

*NOTE:*
*Remove the front fender when the front wheel does not come off smoothly.*

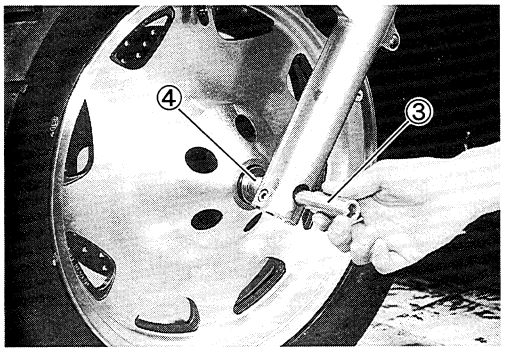


- Remove the brake disc by removing its bolts.

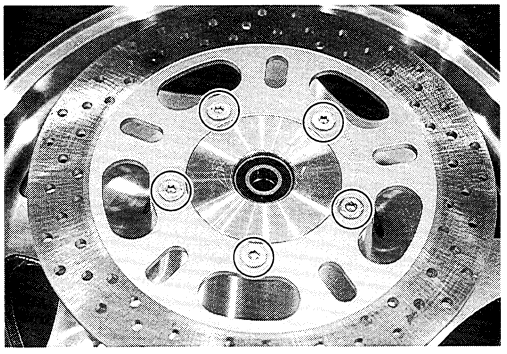

# INSPECTION AND DISASSEMBLY

## TIRES

See pp. 6-65 to -69.

## WHEEL

Make sure that the front and rear wheel runout (axial and rear) does not exceed the service limit when checked as shown. An excessive amount of runout is usually due to worn or loosen wheel bearings and can be corrected by replacing the bearings. If bearing replacement fails to reduce the runout, replace the wheel.

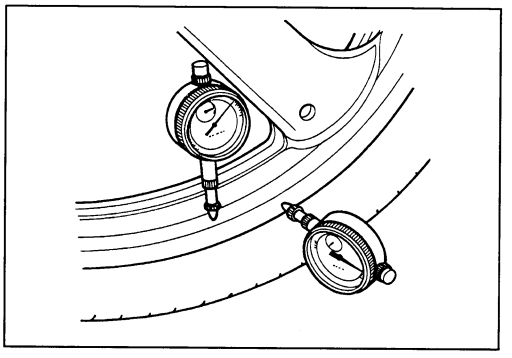

**Service Limit**

**Wheel rim runout (axial and radial): 2.0 mm (0.08 in)**

## WHEEL BEARINGS

Inspect the play of the wheel bearings by hand while they are in the wheel. Rotate the inner race by hand to inspect it for abnormal noise and smooth rotation.

Replace the wheel bearings if there is anything unusual.

Remove the wheel bearings as follows:

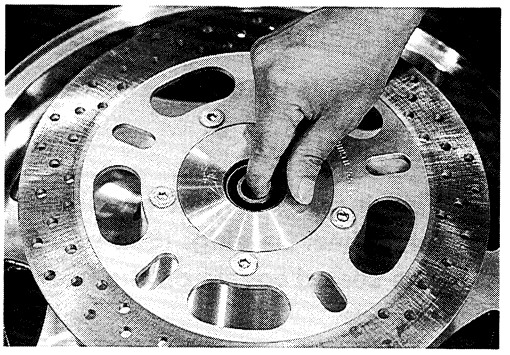

- Insert the adaptor into the wheel bearing.
- After inserting the wedge bar from the opposite side, lock the wedge bar in the slit of the adaptor.
- Drive out both bearings by striking the wedge bar.

**TOOL 09941-50111: Bearing remover set**

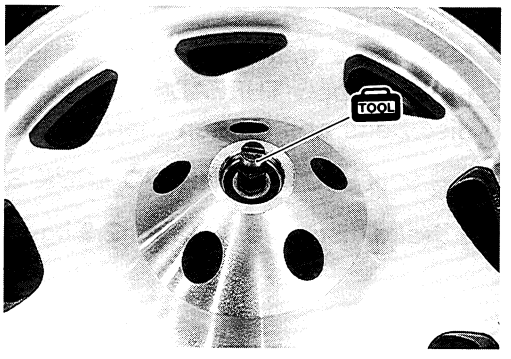


**⚠ CAUTION**

**The removed bearings must be replaced with new ones.**

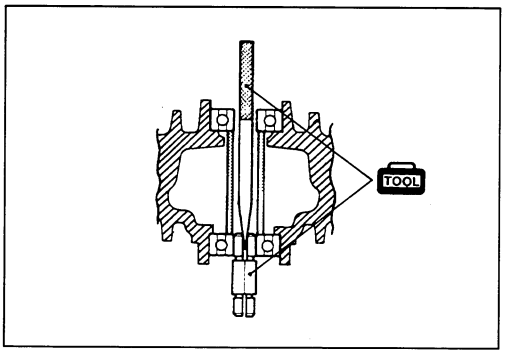

### WHEEL AXLE

Measure the wheel axle runout using the dial gauge.
If the runout exceeds the limit, replace the wheel axle.

**TOOL 09900-20606: Dial gauge (1/100 mm, 10 mm)**
**09900-20701: Magnetic stand**
**09900-21304: V-block set (100 mm)**

**Service Limit**
**Wheel axle runout (Front and Rear): 0.25 mm (0.010 in)**

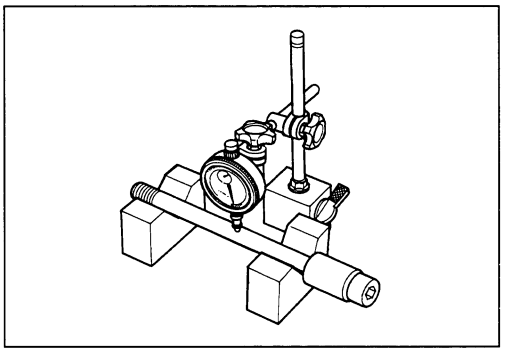

## REASSEMBLY AND REMOUNTING

Reassemble and remount the front wheel in the reverse order of removal and disassembly. Pay attention to the following points:

### WHEEL BEARING

- Apply SUZUKI SUPER GREASE "A" to the bearings before installing.

**99000-25010: SUZUKI SUPER GREASE "A"**

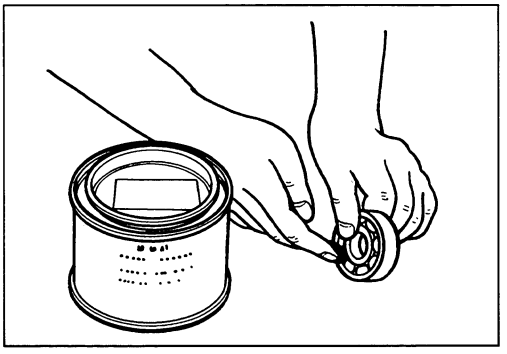

- Install the wheel bearings using the used bearings and special tool as described below.

**TOOL 09924-84510: Bearing installer set**

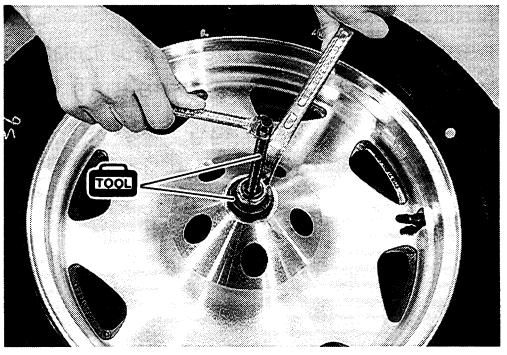


**⚠ CAUTION**

- **First install the right wheel bearing, then install the left wheel bearing. (See p. 6-6.)**
- **The sealed covers on the bearings must face to the outside.**

### BRAKE DISC

- Make sure that the brake disc is clean and free of any grease. Apply THREAD LOCK SUPER "1360" to the brake disc bolts and tighten them to the specified torque.

**1360 99000-32130: THREAD LOCK SUPER "1360"**

**Brake disc bolt: 23 N·m (2.3 kg-m, 16.5 lb-ft)**

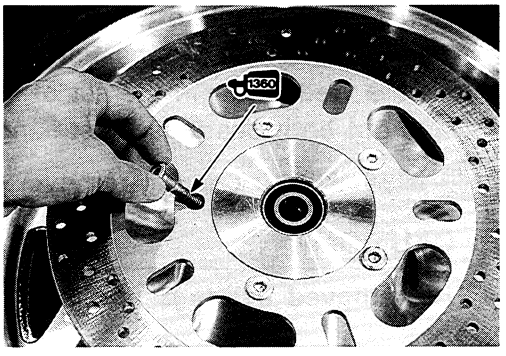

## FRONT WHEEL

- Install the front wheel, spacers and front axle.

① For left side
② For right side

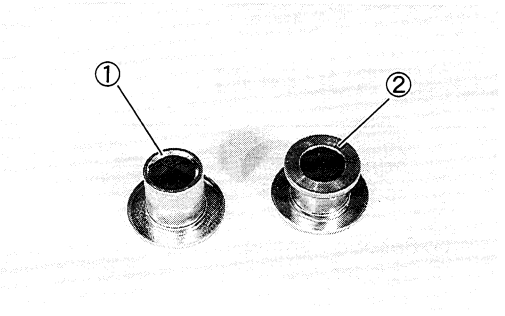


*NOTE:*
*Refer to the page 6-6 for the spacer positioning.*

**⚠ CAUTION**

**When installing the front wheel, position the brake disc between the brake pads. Be careful not to damage the brake pads.**

- Tighten the front axle to the specified torque.
- Tighten the front axle pinch bolts ③ on the specified torque.

**Front axle: 65 N·m (6.5 kg-m,47.0 lb-ft)**
**Front axle pinch bolt: 23 N·m (2.3 kg-m, 16.5 lb-ft)**

**TOOL 09900-18710: Hexagon socket (12 mm)**

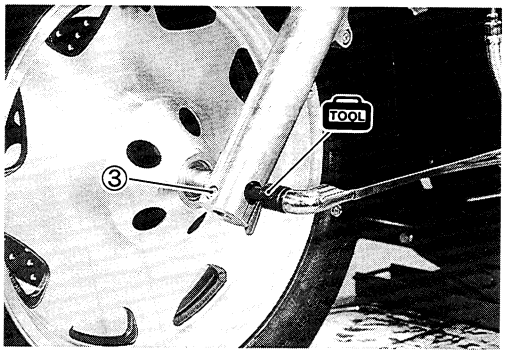


*NOTE:*
*Before tightening the front axle and front axle pinch bolts ③, move the front fork up and down four or five times.*

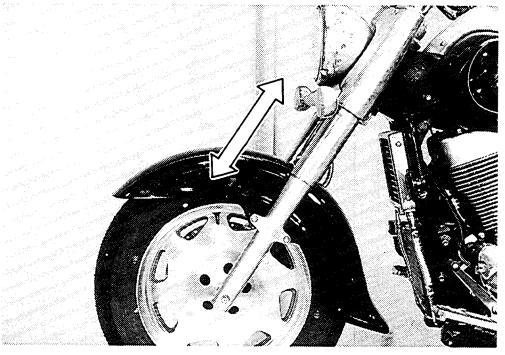

*NOTE:*
*After remounting the front wheel, pump the brake lever a few times to check for proper brake operation.*

# FRONT FORK

## CONSTRUCTION

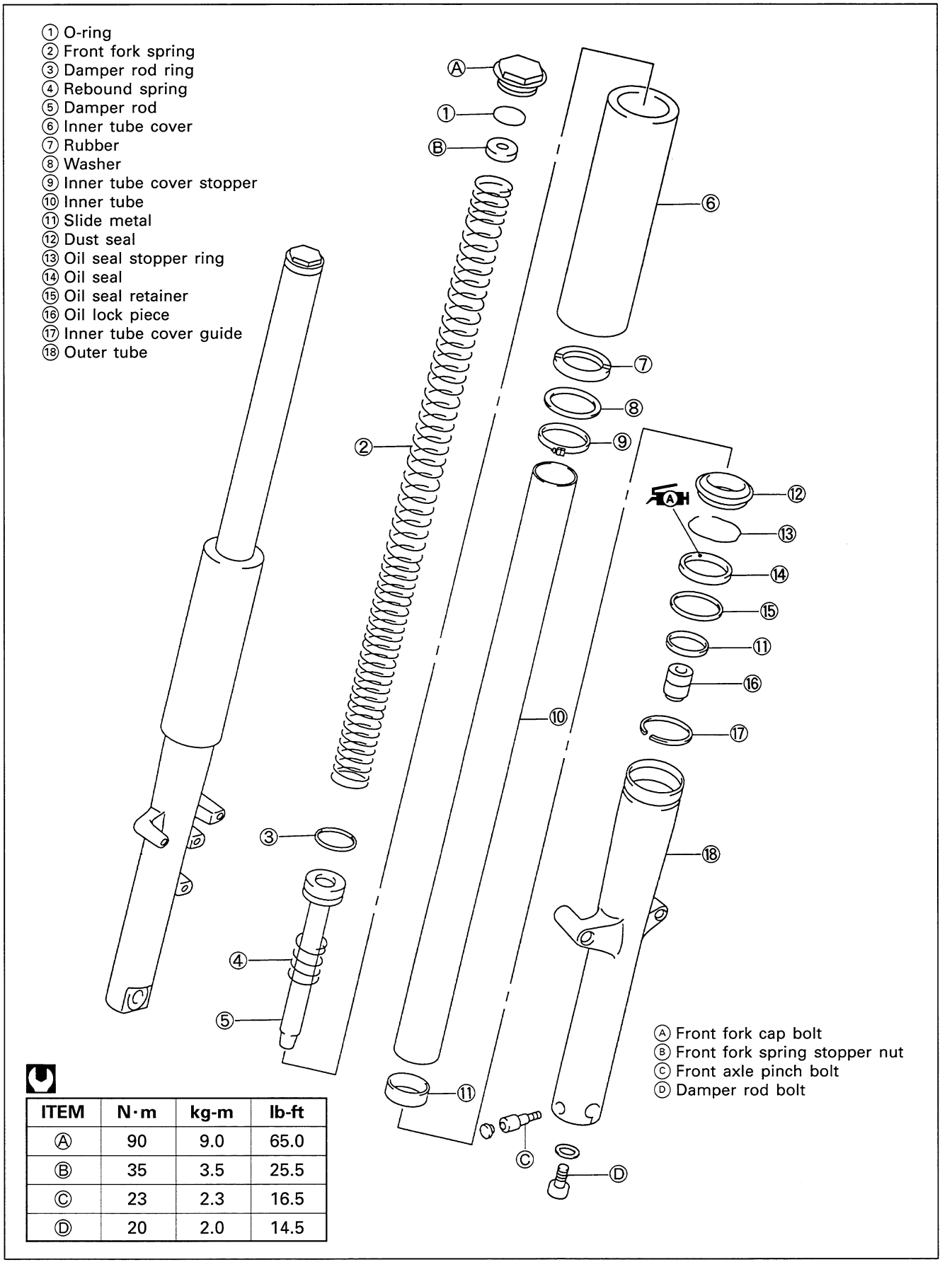


| ITEM | N·m | kg-m | lb-ft |
|---|---|---|---|
| Ⓐ | 90 | 9.0 | 65.0 |
| Ⓑ | 35 | 3.5 | 25.5 |
| Ⓒ | 23 | 2.3 | 16.5 |
| Ⓓ | 20 | 2.0 | 14.5 |

## REMOVAL AND DISASSEMBLY

- Remove the front wheel. (See p. 6-7.)
- Remove the bolt caps.
- Remove the brake hose from the hose guide.

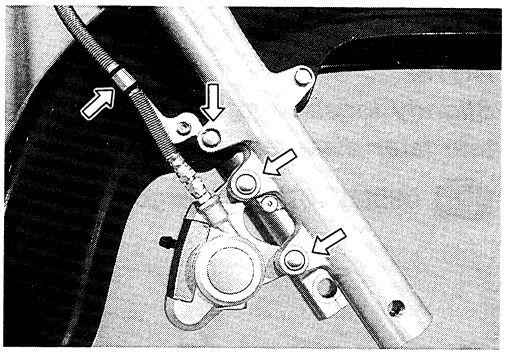

- Remove the front fender by removing its mounting bolts.

**⚠ CAUTION**

**Be careful not to scratch the front fender.**

- Remove the front brake caliper by removing the bolts.

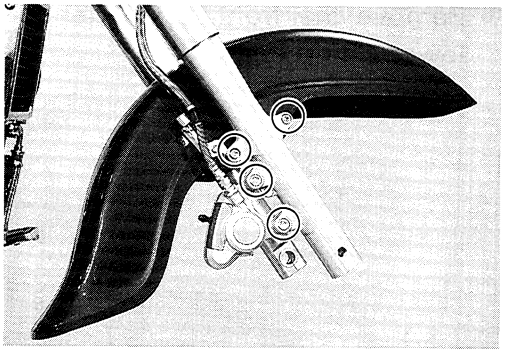

- Remove the headlight by removing the mounting screws.
- Disconnect the couplers.
- Remove the headlight housing.
- Remove the turn signal light bracket ①.

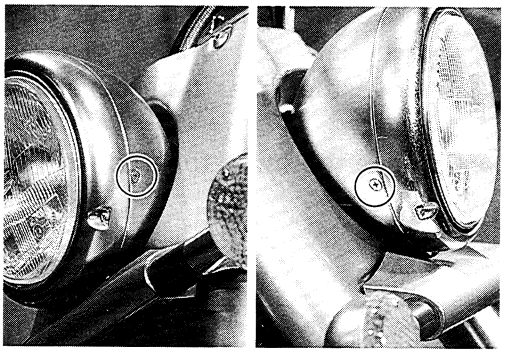

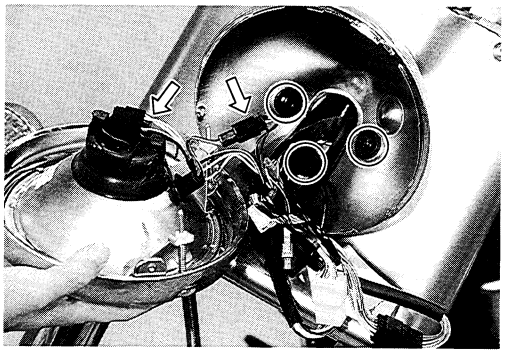

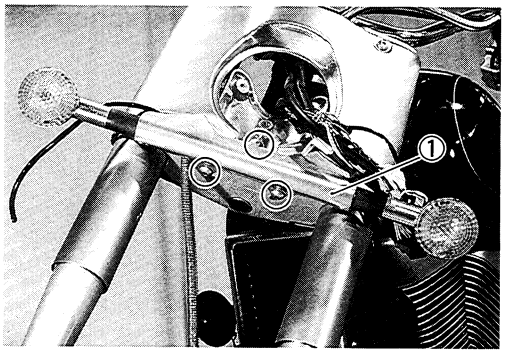


- Remove the front fork upper cover bolts.
- Slightly move the front fork upper cover ② down.

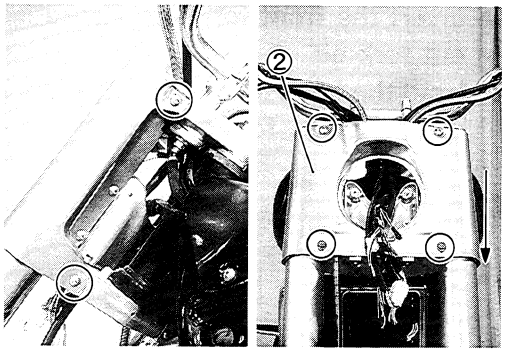

- Remove the front fork cap bolts ①.

*NOTE:*
*Slightly loosen the front fork spring stopper nut to facilitate later disassembly.*

**TOOL 09900-18720: Hexagon socket (14 mm)**

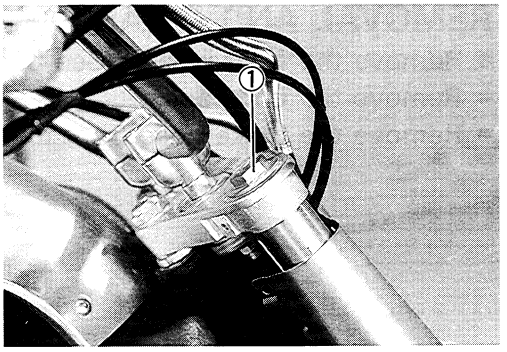


- Remove the front forks after loosening the front fork lower clamp bolts.

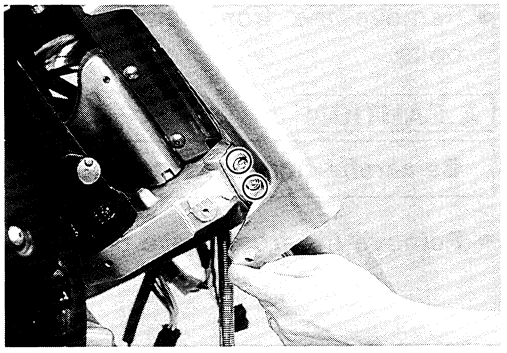

- Remove the front fork inner tube cover ②, washer ③ and rubber ④.
- Remove the inner tube cover stopper ⑤ by loosening the bolt.
- Remove the inner tube cover guide ⑥.

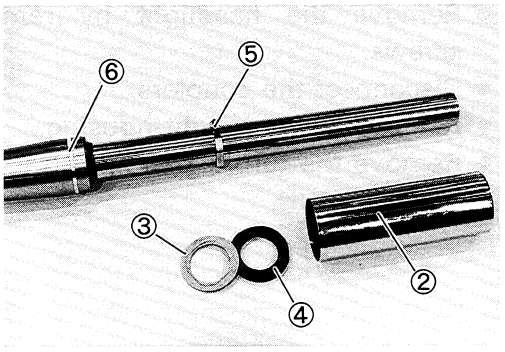


- Remove the front fork spring stopper nut ⑦ and fork spring ⑧.

**TOOL 09900-18720: Hexagon socket (14 mm)**

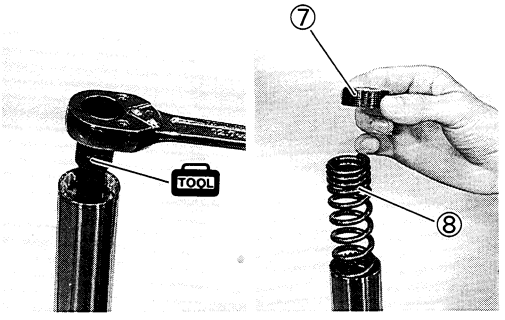


- Invert the front fork and stroke it several times to drain out fork oil.
- Hold the front fork in the inverted position for a few minutes to allow fork oil to fully drain.

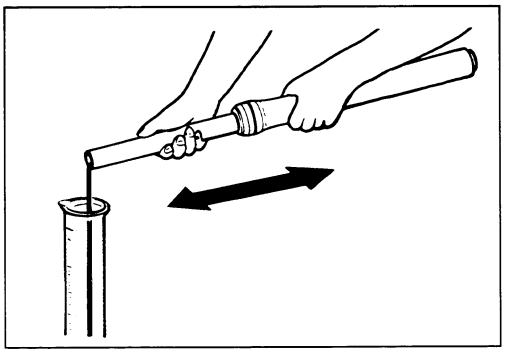

- Remove the damper rod bolt using a 6-mm hexagon wrench and the special tools.

**TOOL 09940-34520: "T" handle**
**09940-34531: Attachment "A"**

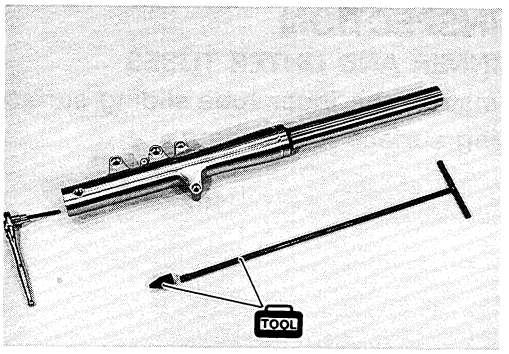


- Remove the damper rod ① and Rebound spring ②.

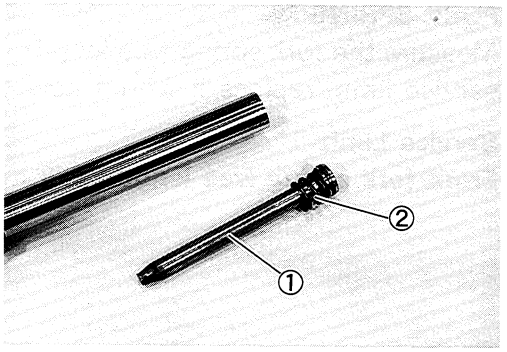


- Remove the dust seal ③ and the oil seal stopper ring ④.

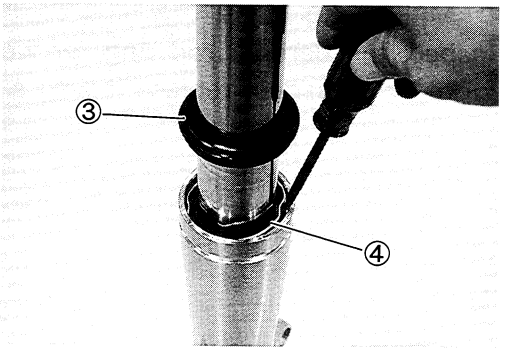


- Remove the oil seal by slowly pulling out the inner tube.

*NOTE:*
*Be careful not to damage the inner tube.*

**⚠ CAUTION**

**The outer and inner tube's slide metals must be replaced along with the oil seal and dust seal when assembling the front fork.**

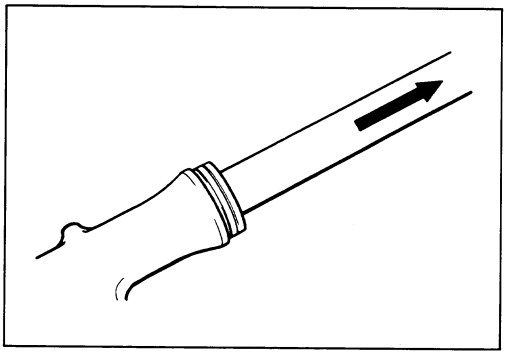

- Remove the following parts.

⑤ Oil seal
⑥ Oil seal retainer
⑦ Outer tube slide metal
⑧ Inner tube slide metal
⑨ Oil lock piece

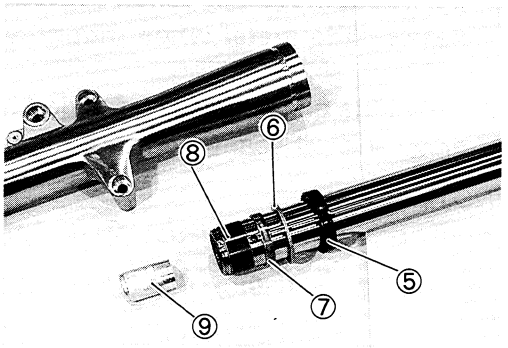

## INSPECTION

### INNER AND OUTER TUBES

Inspect the inner tube sliding surface and outer tube sliding surface for scuffing.

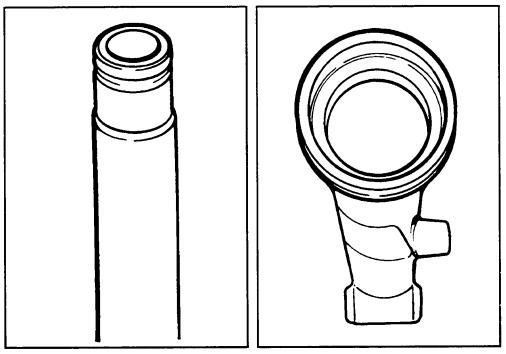

### FORK SPRING

Measure the fork spring free length. If it is shorter than the service limit, replace it with a new one.

**Service Limit**

**Front fork spring free length: 573 mm (22.56 in)**

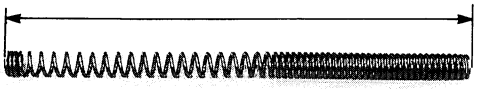

### DAMPER ROD RING

Inspect the damper rod ring for wear or damage. If it is worn or damaged, replace it with a new one.

## REASSEMBLY AND REMOUNTING

Reassemble and remount the front fork in the reverse order of removal and disassembly. Pay attention to the following points:

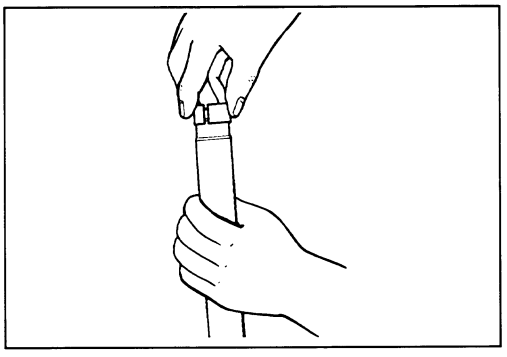

### SLIDE METALS AND OIL AND DUST SEALS

- Hold the inner tube vertically, clean the metal groove and install the slide metal by hand.

**⚠ CAUTION**

**Do not damage the Teflon coated surface of the inner tube's slide metal when mounting it.**

- Install the oil lock piece ①, slide metals ②, oil seal retainer ③ and oil seal ④ onto the inner tube.

*NOTE:*

*Apply grease to the oil seal ④ lip lightly before installing it.*

**99000-25010: SUZUKI SUPER GREASE "A"**

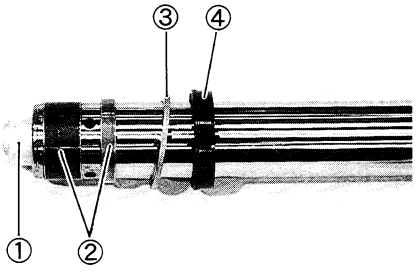

*NOTE:*
*When installing the oil lock piece, insert the tapered end Ⓐ of oil lock piece into the inner tube.*

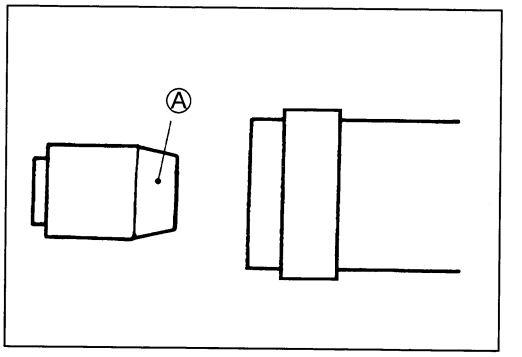


- Insert the inner tube into the outer tube and install the oil seal ① using the special tool.

**TOOL 09940-52861: Front fork oil seal installer**

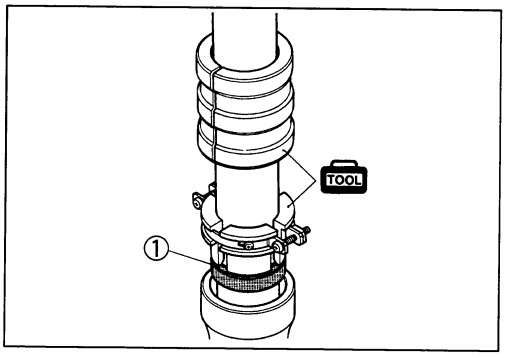


- Install the oil seal stopper ring ②.

**⚠ CAUTION**

**Make sure that the oil seal stopper ring is fitted securely.**

- Install the dust seal ③.

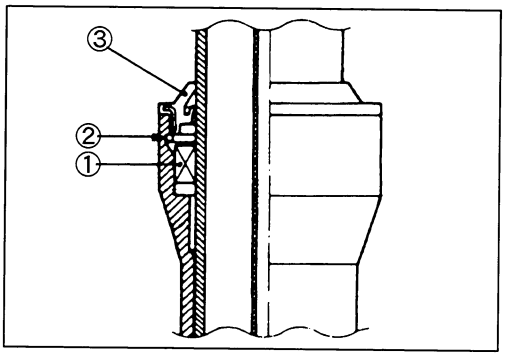


**DAMPER ROD**

- Install the damper rod ④ and rebound spring ⑤ as shown.

Tighten the damper rod bolt to the specified torque using a 6-mm hexagon wrench and the special tools.

**TOOL 09940-34520: "T" handle**
**09940-34531: Attachment "A"**

**Damper rod bolt: 20 N·m (2.0 kg-m, 14.5 lb-ft)**

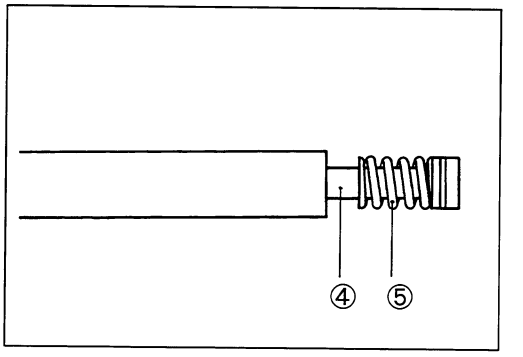


**⚠ CAUTION**

**Use a new damper rod bolt gasket ⑥ to prevent oil leakage.**

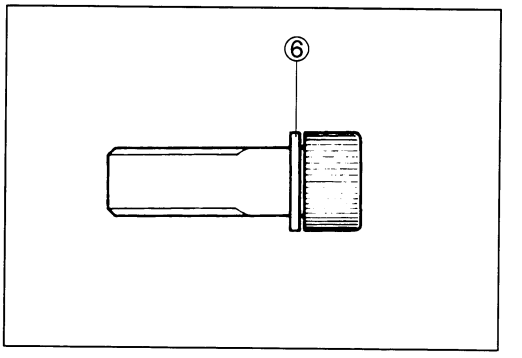

**FORK OIL**

- Pour the specified fork oil into the inner tube.

**Fork oil type: SUZUKI FORK OIL SS-08 (#10) or equivalent fork oil**

**FORK 99000-99001-SS8: SUZUKI FORK OIL SS-08**

**Specification**

**Front fork oil capacity (each leg): 439 ml (14.8/15.5 US/Imp oz)**

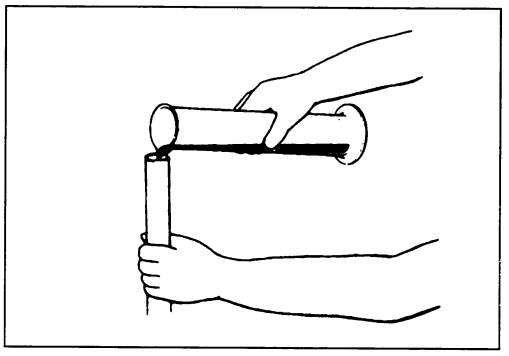

- Hold the front fork in a vertical position and adjust the fork oil level using the special tool.

**TOOL 09943-74111: Front fork oil level gauge**

**Service limit**

**Front fork oil level: 169.0 mm (6.65 in)**

*NOTE:*

*When adjusting the oil level, remove the fork spring and compress the inner tube fully.*

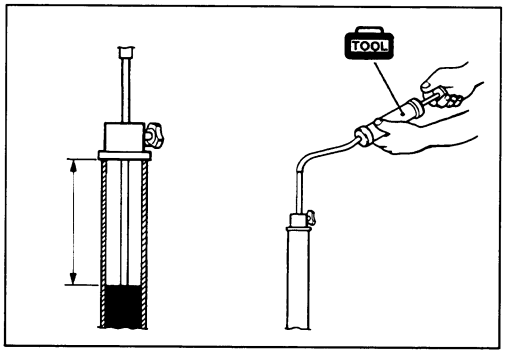


**FORK SPRING**

- Install the fork spring as shown.

*NOTE:*

*The end of the fork spring with the widely close pitch Ⓐ side should be at the bottom Ⓑ of the front fork.*

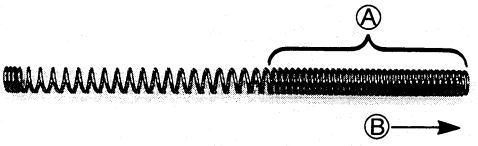


- Install the front fork spring stopper nut temporarily.

**TOOL 09900-18720: Hexagon socket (14 mm)**

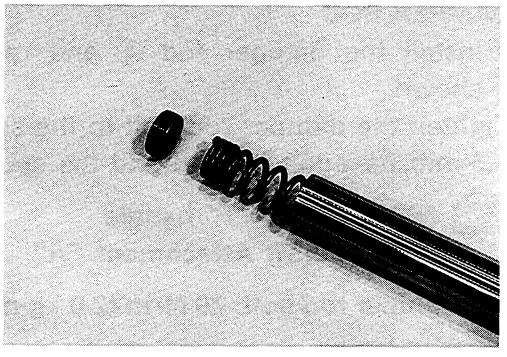

**REMOUNTING**

Remount the front forks in the reverse order of removal. Pay attention to the following points.

- Install the inner tube cover stopper ① at 281.3 mm (11.07 in) Ⓒ from the upper surface of the inner tube.
- Install the inner tube cover guide ②.

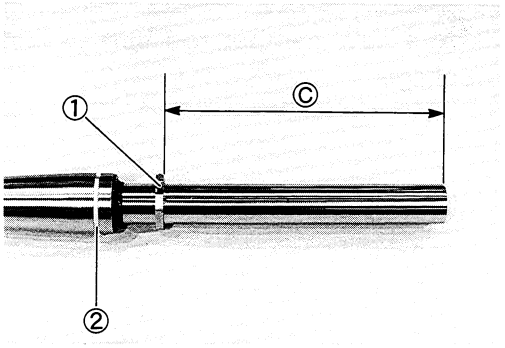

- Install the inner tube cover ①, washer ② and rubber ③.

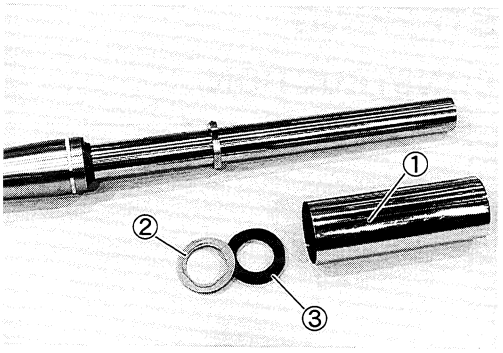


- Remount the front fork and tighten the front fork lower clamp bolts temporarily.

*NOTE:*
*Touch the upper surface Ⓐ of the inner tube with the stopper part Ⓑ of the steering stem upper bracket.*

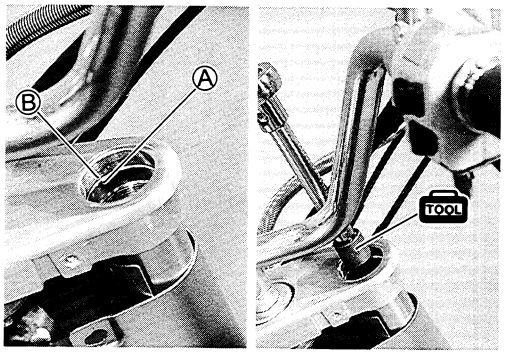


- Tighten the front fork spring stopper nut to the specified torque.

**Front fork spring stopper nut: 35 N·m (3.5 kg-m, 25.5 lb-ft)**

**TOOL 09900-18720: Hexagon socket (14 mm)**

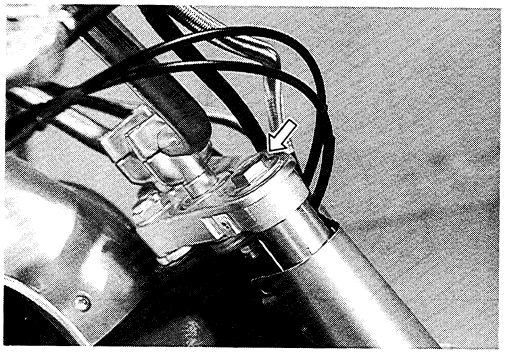

- After loosening the front fork lower clamp bolts slightly, tighten the front fork cap bolt to the specified torque.

**Front fork cap bolt: 90 N·m (9.0 kg-m, 65.0 lb-ft)**

**⚠ CAUTION**

**Replace the front fork cap bolt's O-ring to prevent oil leakage.**

*NOTE:*
*Remove the handlebars, when it is difficult to tighten the front fork cap bolts. Install the handlebars to the specified manner. (See p. 6-25).*

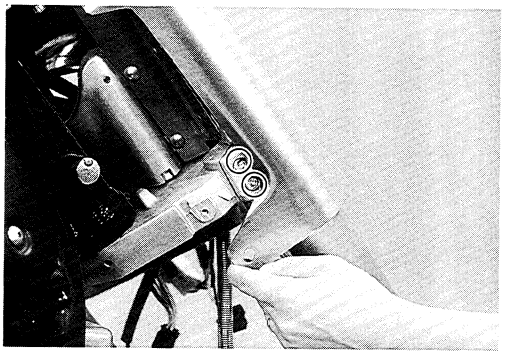

- Tighten the front fork lower clamp bolts to the specified torque.

**Front fork lower clamp bolt: 23 N·m (2.3 kg-m, 16.5 lb-ft)**

- Tighten the front brake caliper mounting bolts to the specified torque.

**Front brake caliper mounting bolt: 35 N·m (3.5 kg-m, 25.5 lb-ft)**

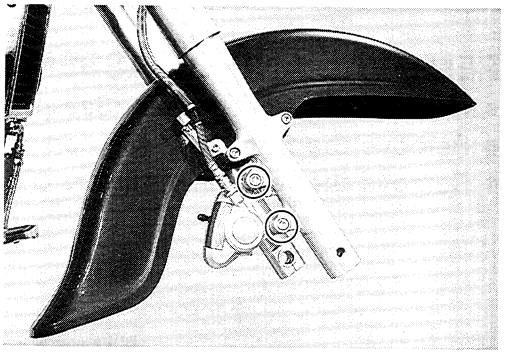

- Install the front wheel. (See p. 6-10.)

*NOTE:*
*Before tightening the front axle and front axle pinch bolts, move the front fork up and down four or five times.*

# STEERING

## CONSTRUCTION

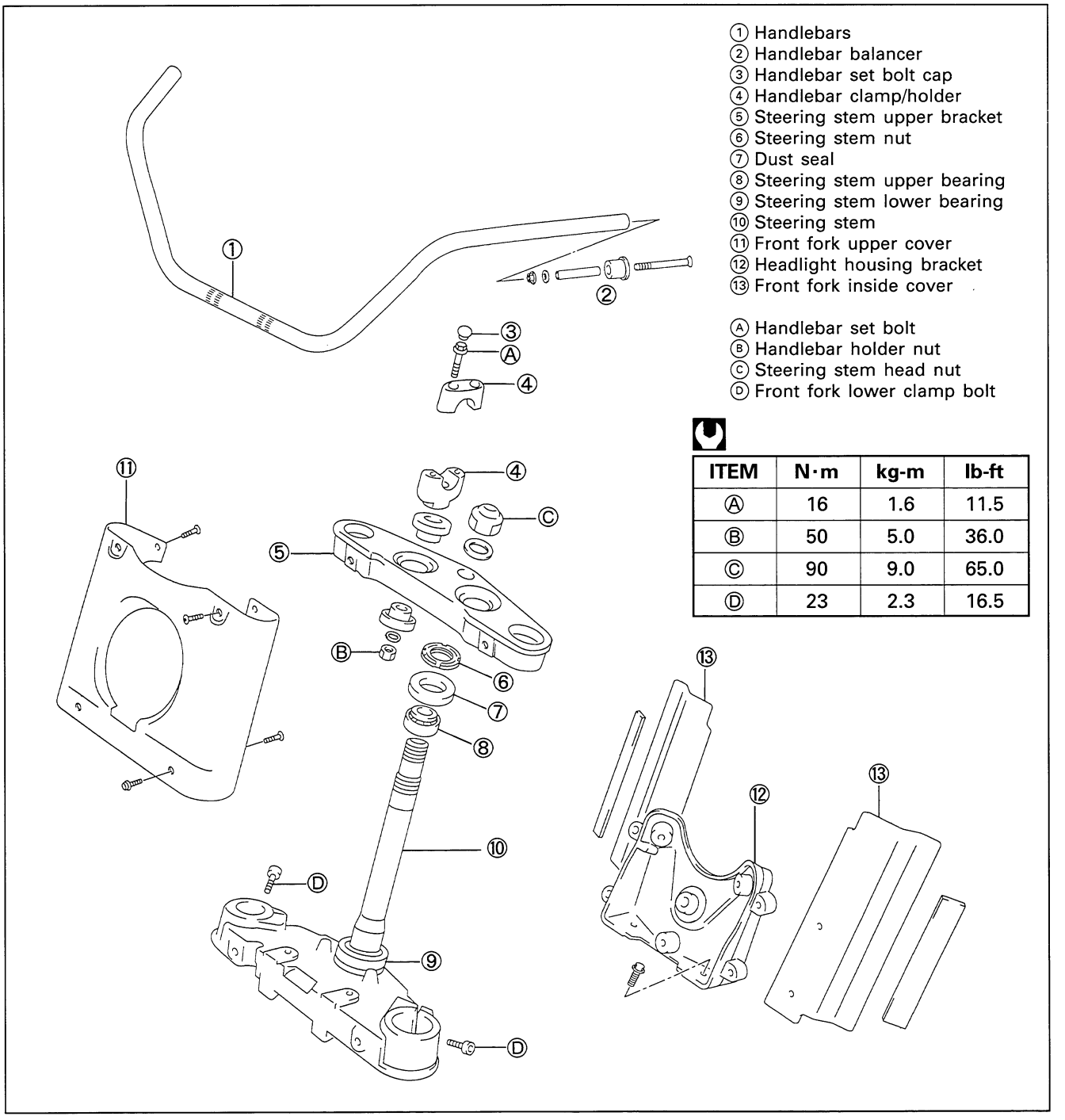


| ITEM | N·m | kg-m | lb-ft |
|---|---|---|---|
| Ⓐ | 16 | 1.6 | 11.5 |
| Ⓑ | 50 | 5.0 | 36.0 |
| Ⓒ | 90 | 9.0 | 65.0 |
| Ⓓ | 23 | 2.3 | 16.5 |

## REMOVAL AND DISASSEMBLY

- Remove the front wheel. (See p. 6-7.)
- Remove the front fork. (See pp. 6-12 and -13.)
- Remove the rear view mirrors ①.

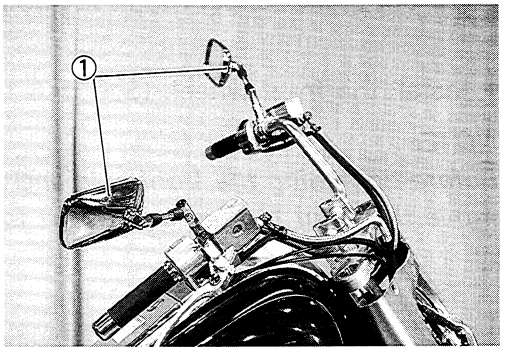

- Disconnect the front brake light switch lead wires ①.
- Remove the bolt caps.
- Remove the front brake master cylinder ②.

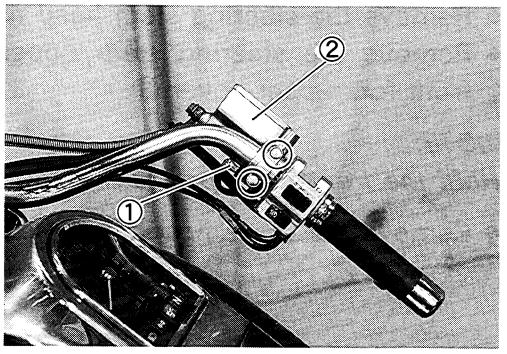


- Remove the right handlebar balancer ③, the right handlebar switch ④ and the throttle grip ⑤.

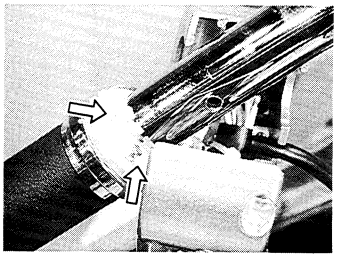

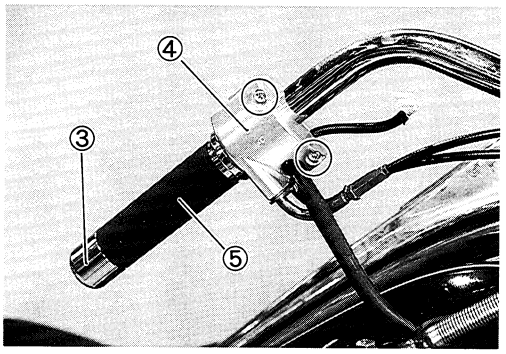


- Disconnect the clutch lever position switch lead wires ⑥.
- Remove the bolt caps.
- Remove the clutch master cylinder ⑦.

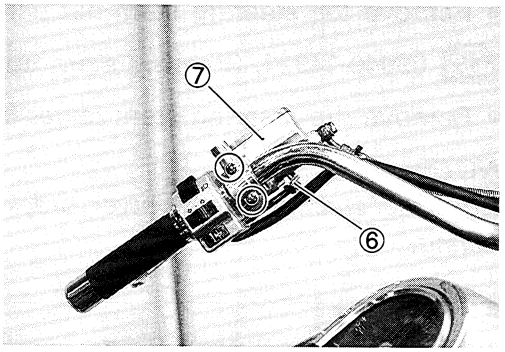


- Remove the left handlebar balancer ⑧ and the left handlebar switch ⑨.

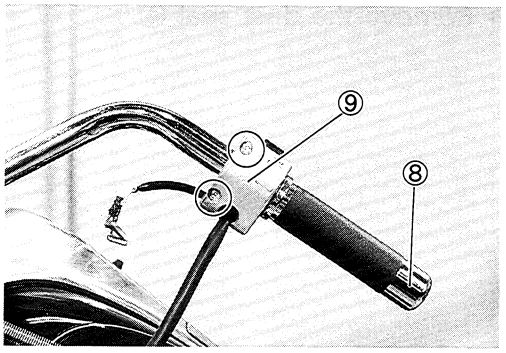


- Remove the handlebars by removing the handlebar clamp bolt caps, handlebar clamp bolts and handlebar clamps.

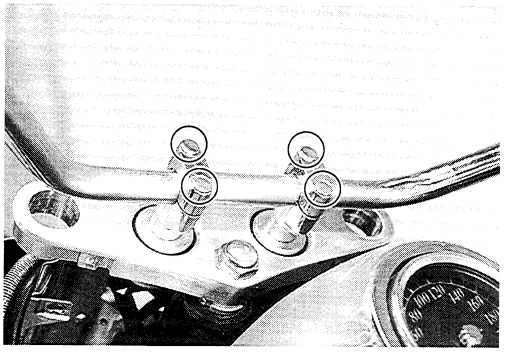

- Remove the steering stem head nut ① and washer.
- Remove the steering stem upper bracket ② and the front fork upper cover ③.

*NOTE:*
*Hold the front fork upper cover to prevent it from falling.*

- Remove the brake hose from the hose guide.

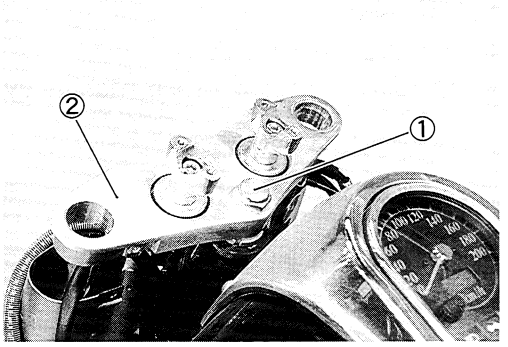


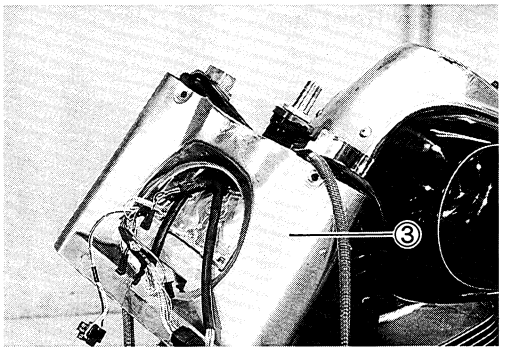


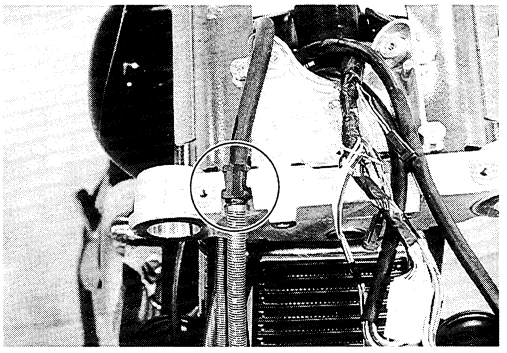

- Remove the steering stem nut using the special tool.

**TOOL 09940-14911: Steering stem nut wrench**

- Remove the steering stem lower bracket.

*NOTE:*
*Hold the steering stem lower bracket to prevent it from falling.*

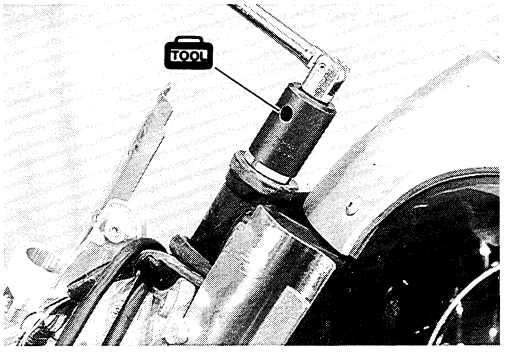


- Remove the dust seal ④.

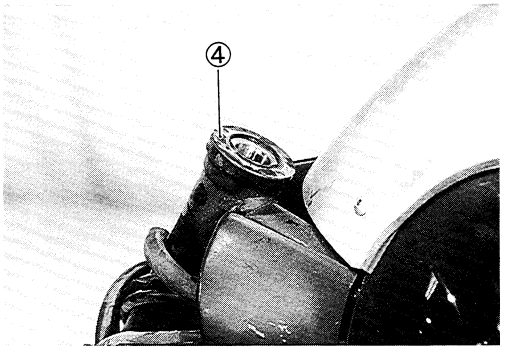


- Remove the steering stem upper bearing ⑤.

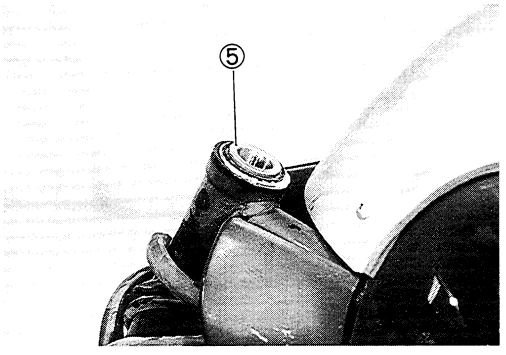

- Remove the handlebar holders from the steering stem upper bracket.

*NOTE:*
*The plating handlebar bushes ① is positioned upside.*

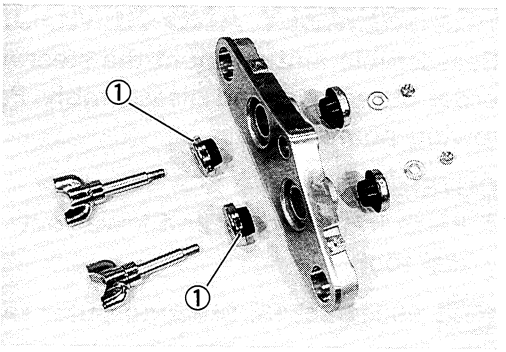


- Remove the headlight housing bracket ② and front fork inside covers ③ from the steering stem lower bracket.

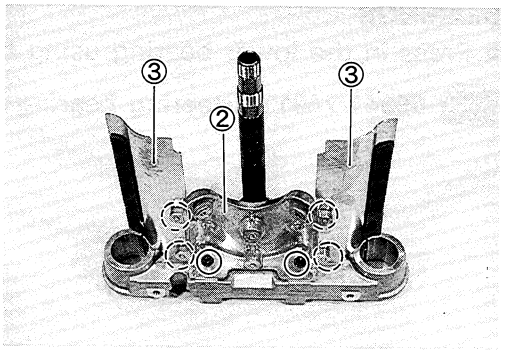


## INSPECTION AND DISASSEMBLY

Inspect the removed parts for the following abnormalities.
* Handlebars distortion
* Race wear and brinelling
* Bearing wear or damage
* Abnormal bearing noise
* Distortion of the steering stem

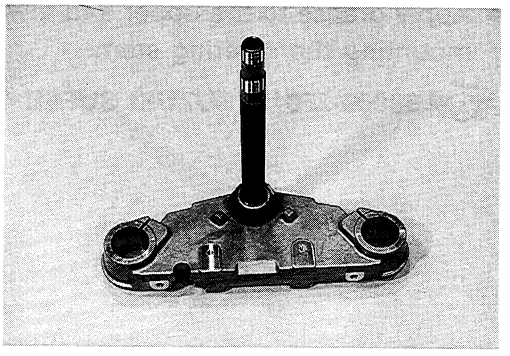

- Remove the steering stem lower bearing and inner race by using a chisel.

**⚠ CAUTION**

**The removed bearing and inner race must be replaced with a new one.**

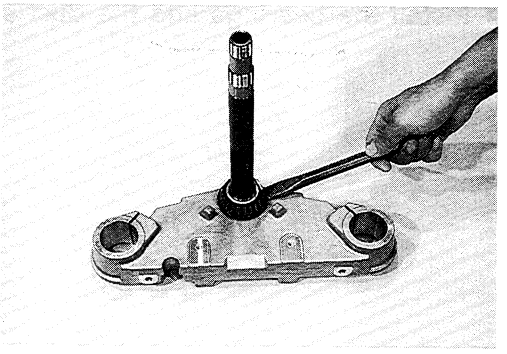

- Drive out the steering stem upper and lower bearing races by using the special tools and suitable bar.

**TOOL 09941-54911: Bearing outer race remover**

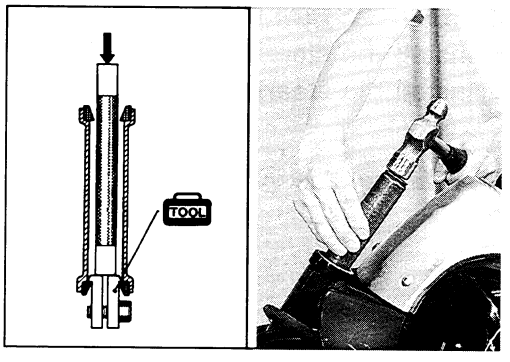

## REASSEMBLY AND REMOUNTING

Reassemble and remount the steering stem in the reverse order of removal and disassembly. Pay attention to the following points.

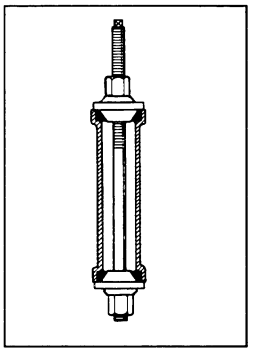

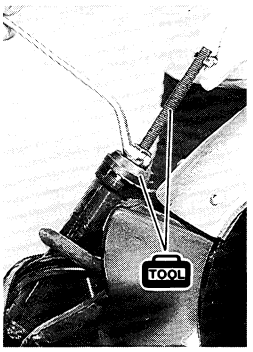


### OUTER RACES

- Press in the upper and lower outer races using the special tool.

**TOOL 09941-34513: Steering outer race installer**

### BEARINGS

- Press in the lower bearing using the special tool.

**TOOL 09941-74911: Steering bearing installer**

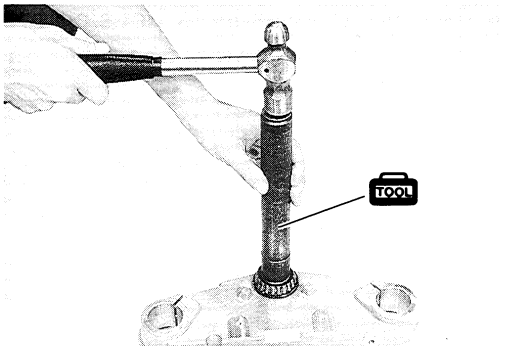


- Apply grease to the upper and lower bearings before remounting the steering stem.

**A H 99000-25010: SUZUKI SUPER GREASE "A"**

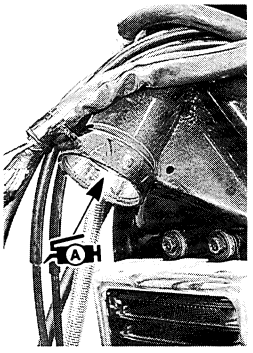


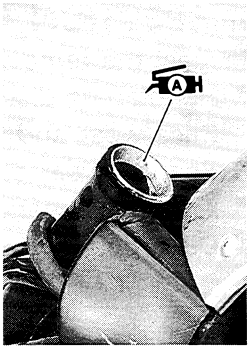


- Install the bearings and the dust seal.

### STEERING STEM NUT

- Install the steering stem.
- Install the steering stem nut as shown.

*NOTE:*
*The flange side Ⓐ of the steering stem must face down.*

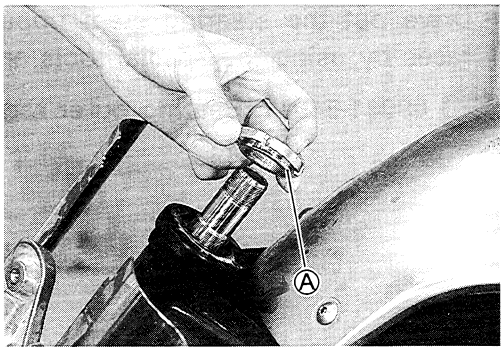

- Tighten the steering stem nut to the specified torque using the special tools.

**TOOL 09940-14911: Steering stem nut wrench**

**Stem nut: 45 N·m (4.5 kg-m, 32.5 lb-ft)**

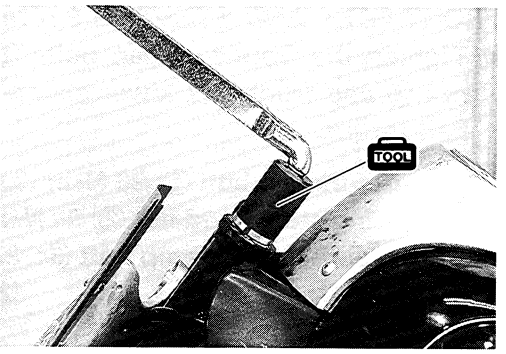


- Turn the steering stem lower bracket about five or six times to the left and right so that the bearings seat properly.
- Loosen the steering stem nut by 1/4–1/2 of a turn.

*NOTE:*
*This adjustment will vary from motorcycle to motorcycle.*

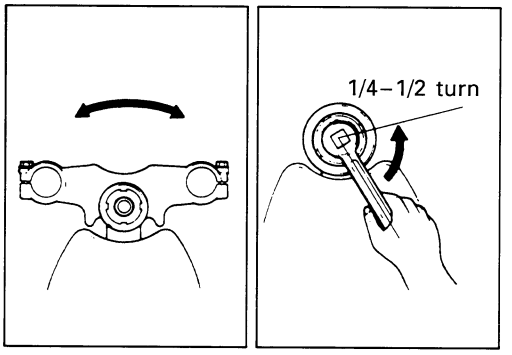


**HANDLEBAR HOLDER**

- Install the handlebar holders and related parts to the steering stem head.
- Hold the handlebar holder with a vise and tighten the handlebar holder nuts to the specified torque.

**Handlebar holder nut: 50 N·m (5.0 kg-m, 36.0 lb-ft)**

*NOTE:*
*The plating handlebar bushes is positioned upside.*

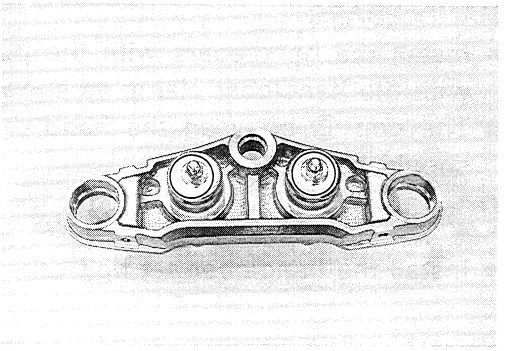

**STEERING STEM UPPER BRACKET**

- Install the front fork upper cover, steering stem upper bracket, washer and steering stem head nut.

*NOTE:*
*Before installing the panel, set the brake hose to the hose guide.*

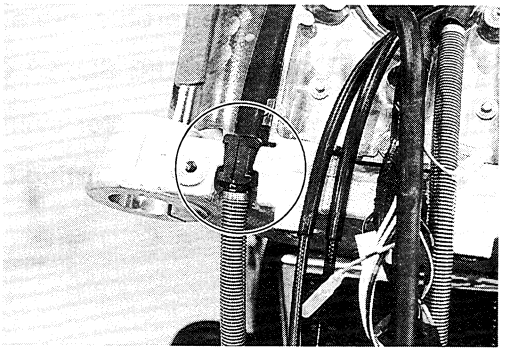

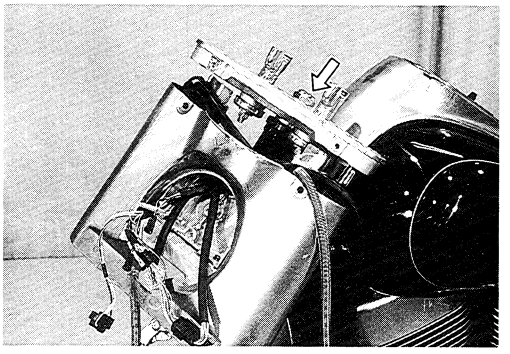

## FRONT FORK AND STEERING STEM HEAD NUT

- Tighten the front fork cap bolts ①, steering stem head nut ② and front fork lower clamp bolts ③ to the specified torque.

**Front fork cap bolt ①: 90 N·m (9.0 kg-m, 65.0 lb-ft)**
**Steering stem head nut ②: 90 N·m (9.0 kg-m, 65.0 lb-ft)**
**Front fork lower clamp bolt ③: 23 N·m (2.3 kg-m, 16.5 lb-ft)**

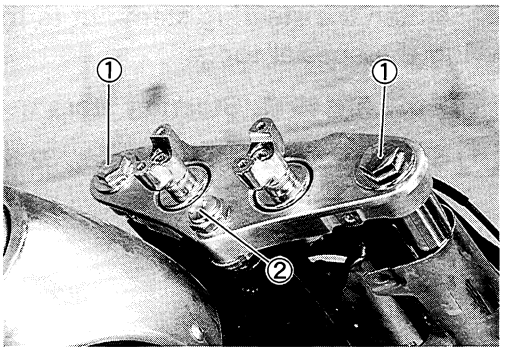


*NOTE:*
** Tighten the front fork cap bolts first, and the lower clamp bolts finally.*
** Rout the brake hose, clutch hose, throttle cables and handlebar switch lead wires, before installing the front forks. (See pp. 8-15 and -17.)*

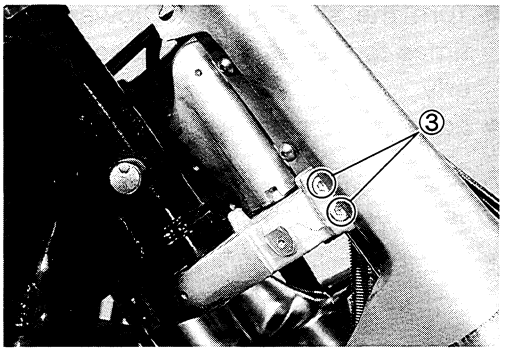


## HANDLEBARS

- Install the handlebars with the punch mark Ⓐ aligned with the handlebar clamp as shown.
- The gap Ⓑ between the handlebar clamp and holder should be even.

**Handlebar set bolt: 16 N·m (1.6 kg-m, 11.5 lb-ft)**

- Install the handlebar set bolt cap.

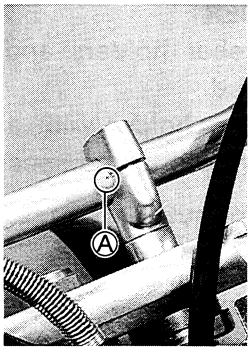


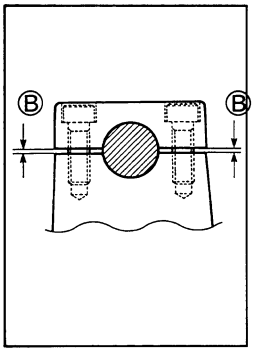


- Apply grease to the throttle cable end.

**99000-25010: SUZUKI SUPER GREASE "A"**

- Install the front brake master cylinder. (See p. 6-50.)

**Front master cylinder mounting bolt: 10 N·m (1.0 kg-m, 7.0 lb-ft)**

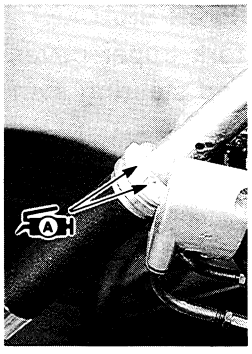

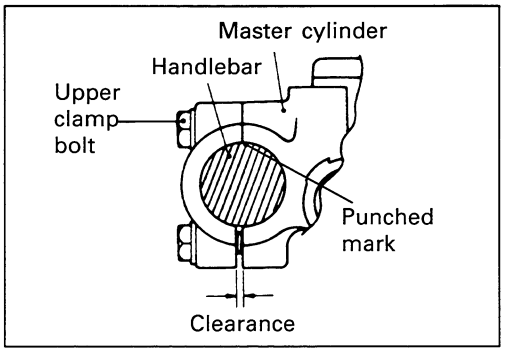

- Install the clutch master cylinder. (See p. 6-64.)
- Install the front wheel. (See p. 6-10.)
- Adjust the throttle cable play. (See p. 2-10.)

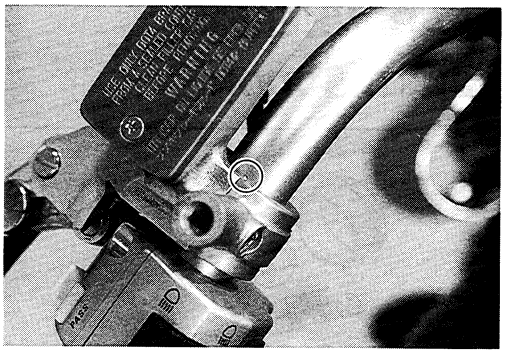

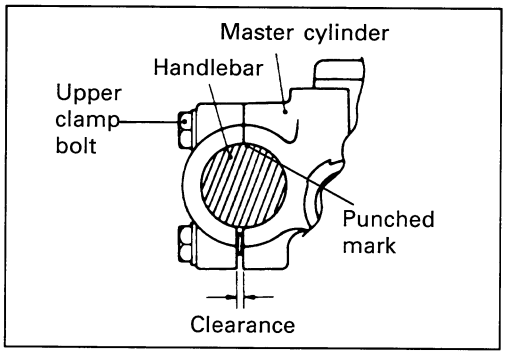


## STEERING TENSION ADJUSTMENT

Check the steering movement after reassemble and remount the all parts. If play or stiffness is noticeable, adjust the steering tension as follows.

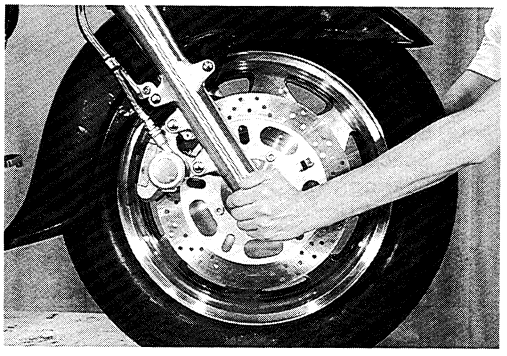

- Remove the headlight, its housing and turn signal light bracket.
- Slightly move the cover down.

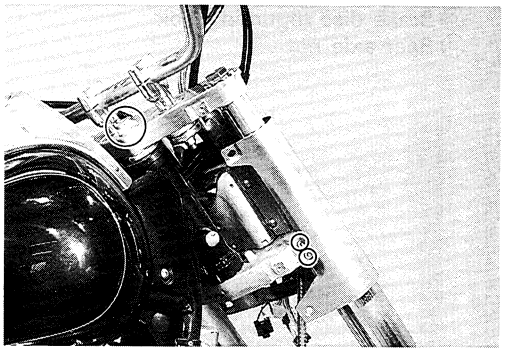

- Loosen the front fork lower clamp bolts and the steering stem head nut. Then, adjust the steering stem nut by either loosening or tightening it.
- Tighten the steering stem head nut and front fork lower clamp bolts to the specified torque and recheck. (See p. 6-25.)

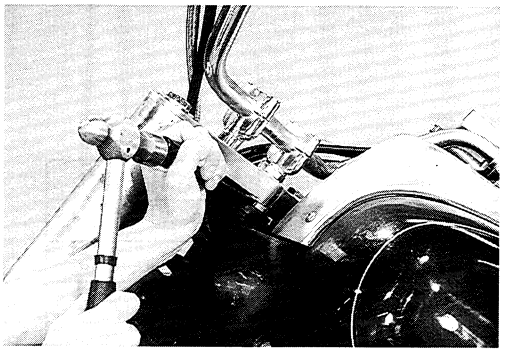

# REAR WHEEL

## CONSTRUCTION

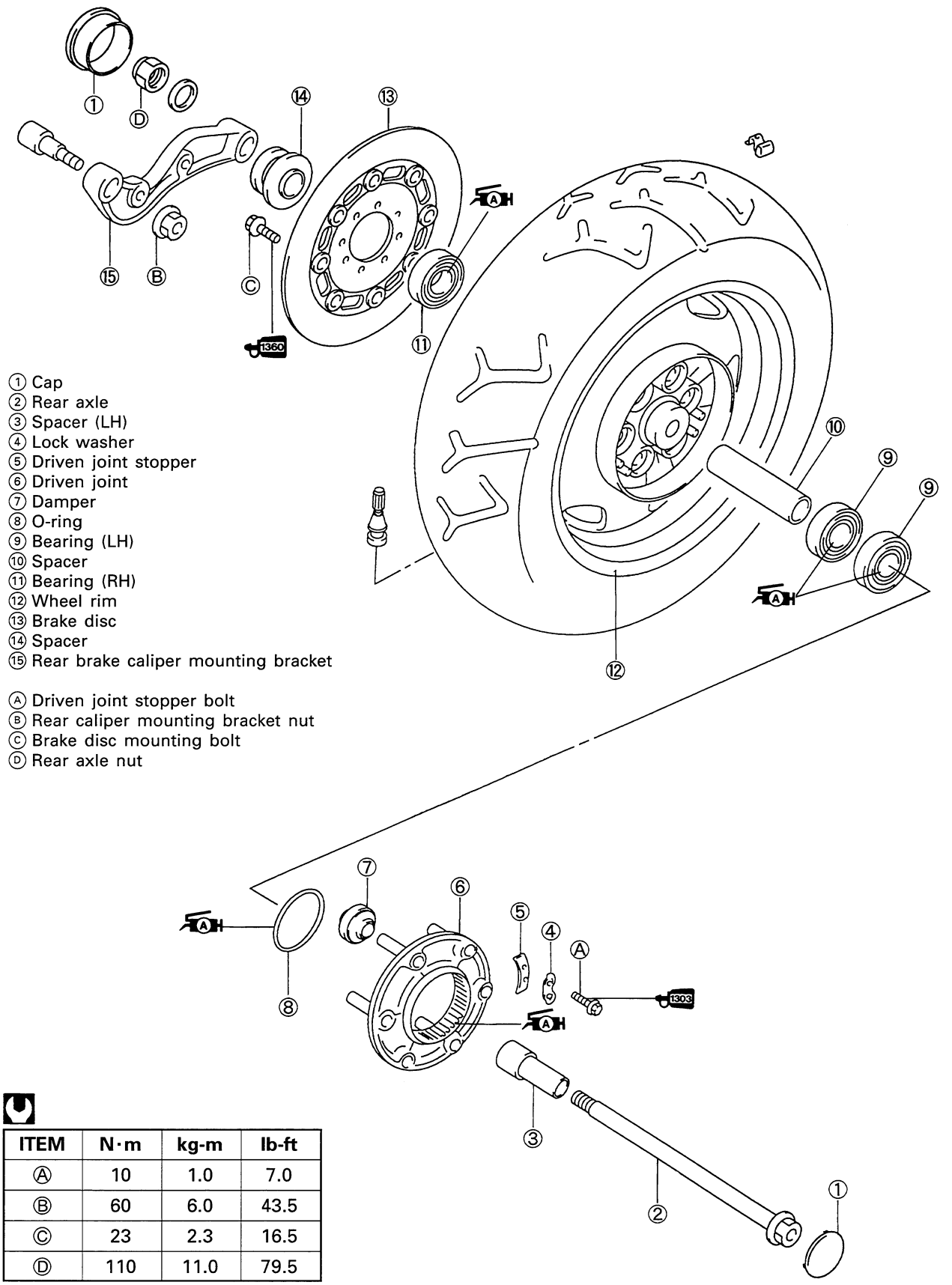


| ITEM | N·m | kg-m | lb-ft |
|---|---|---|---|
| Ⓐ | 10 | 1.0 | 7.0 |
| Ⓑ | 60 | 6.0 | 43.5 |
| Ⓒ | 23 | 2.3 | 16.5 |
| Ⓓ | 110 | 11.0 | 79.5 |

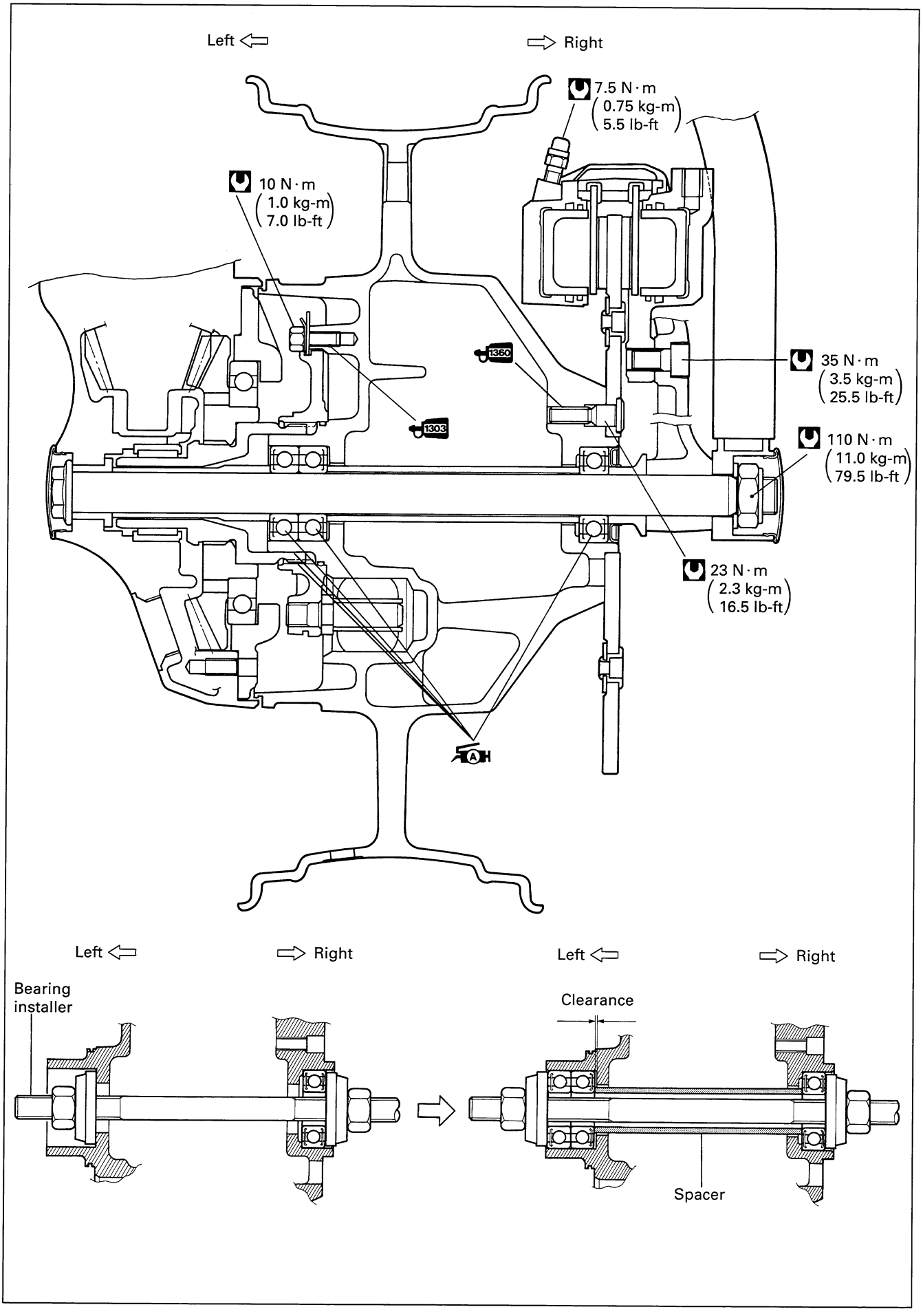
Left
Right
7.5 N·m
(0.75 kg-m
5.5 lb-ft)
10 N·m
(1.0 kg-m
7.0 lb-ft)
1360
1303
35 N·m
(3.5 kg-m
25.5 lb-ft)
110 N·m
(11.0 kg-m
79.5 lb-ft)
23 N·m
(2.3 kg-m
16.5 lb-ft)
A
Left
Right
Bearing
installer
Left
Right
Clearance
Spacer

## REMOVAL

- Remove the seat ①. (See p. 6-2.)
- Remove the rear fender ②. (See p. 6-4.)

*NOTE:*
*The rear fender removal is not necessary when the rear part of motorcycle can be lifted high enough to take the rear wheel out smoothly.*

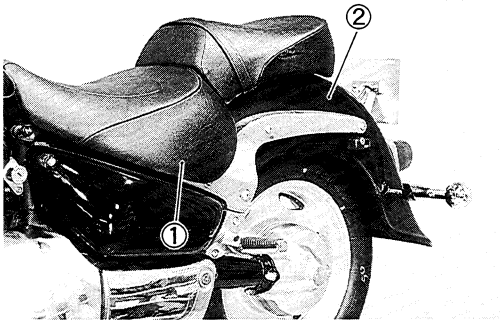


- Remove the engine side box. (See p. 3-3.)

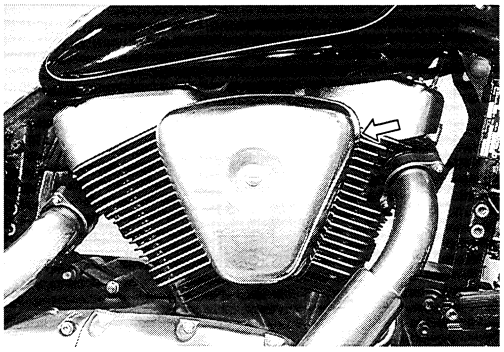

- Remove the exhaust pipes and mufflers assembly ③. (See p. 3-5.)

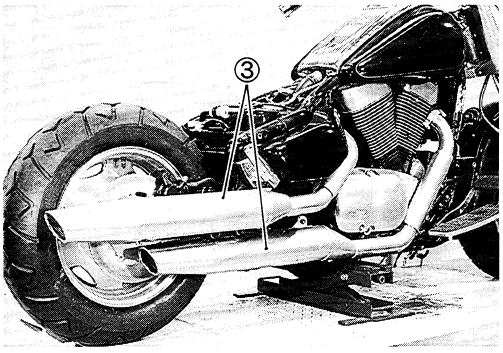


- Remove the axle cap.

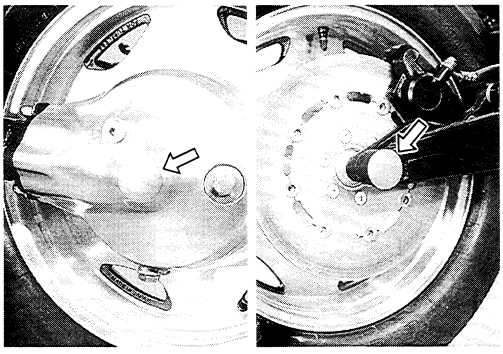

- Loosen the axle nut ④.
- Remove the rear brake caliper mounting bracket bolt ⑤.
- Support the motorcycle using a suitable jack on the frame.
- Remove the rear axle nut ④.
- Remove the rear axle, spacer ⑥ and rear wheel.

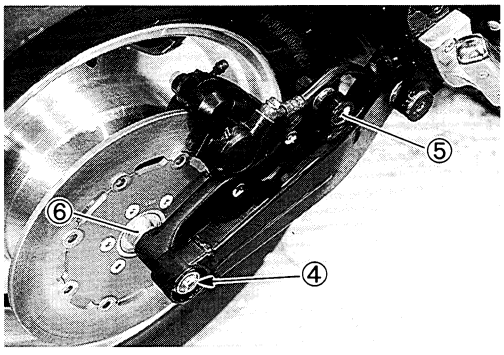


**⚠ CAUTION**

**Do not operate the brake pedal during or after rear wheel removal.**

## DISASSEMBLY

- Flatten the lock washers.
- Remove the fitting bolts, washers and plates.

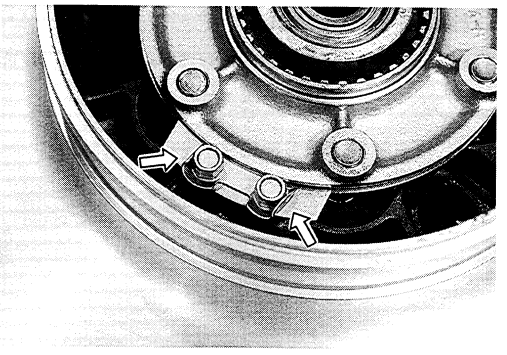

- Pull off the driven joint.

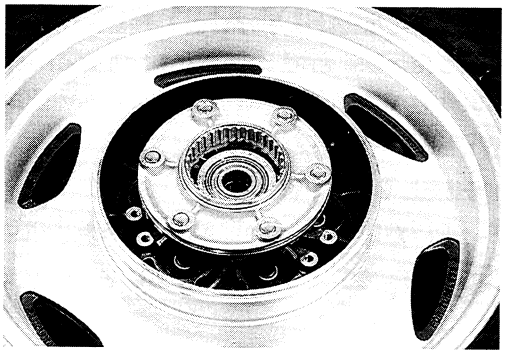

- Remove the O-ring ①.
- Take off the dampers with a screw driver.

**⚠ CAUTION**

**The removed O-ring must be replaced with a new one.**

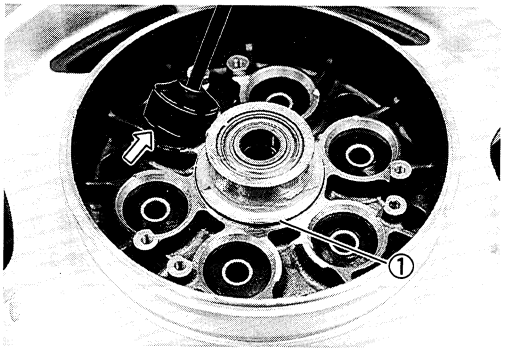


- Remove the brake disc from the rear wheel.

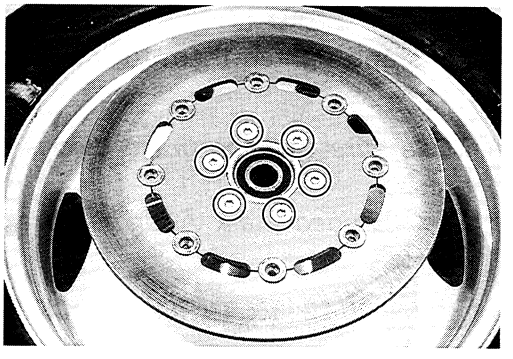

## INSPECTION AND DISASSEMBLY

**WHEEL BEARING** ..... **See p. 6-8.**
**WHEEL AXLE** ..... **See p. 6-9.**
**WHEEL RIM** ..... **See p. 6-8.**
**TIRE** ..... **See pp. 6-65 to -69.**

### WHEEL DAMPER

Inspect the wheel dampers for damage or wear.

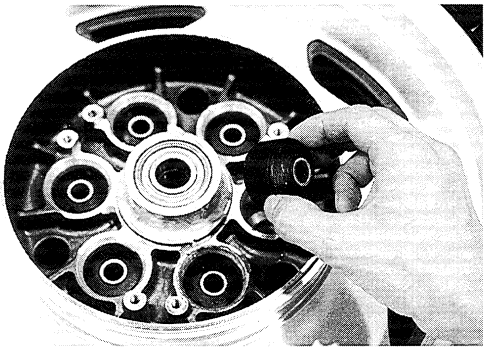

## REASSEMBLY AND REMOUNTING

Reassemble and remount the rear wheel in the reverse order of removal and disassembly. Pay attention to the following points:

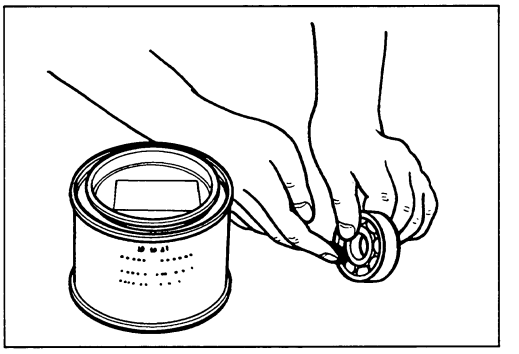

### WHEEL BEARING

- Apply grease to the bearings before installation.

**99000-25010: SUZUKI SUPER GREASE "A"**

- Install the wheel bearings using the special tool.

**09941-34513: Bearing installer set**

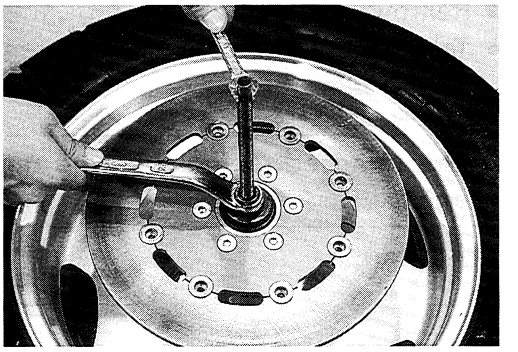

**⚠ CAUTION**

> *** First, install the right wheel bearing, then install the left wheel bearing. (See p. 6-28.)**
> *** The sealed cover on the bearing must face out.**

### BRAKE DISC

- Apply THREAD LOCK SUPER "1360" to the brake disc bolts and tighten them to the specified torque.

*NOTE:*

** Make sure that the brake disc is clean and free of any grease.*

** The stamped mark Ⓐ on the brake disc should face to outside.*

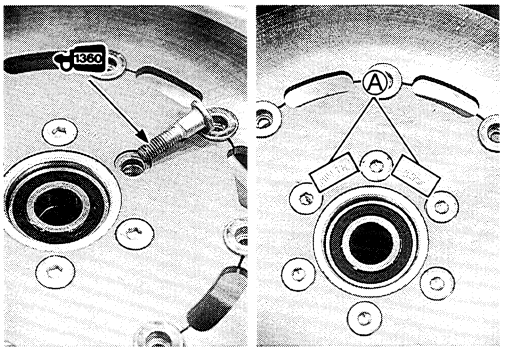


**99000-32130: THREAD LOCK SUPER "1360"**

**Brake disc bolt: 23 N·m (2.3 kg-m, 16.5 lb-ft)**

### WHEEL DAMPER

- Install the dampers.

*NOTE:*

*If soap water is applied around the damper, it makes the job easier.*

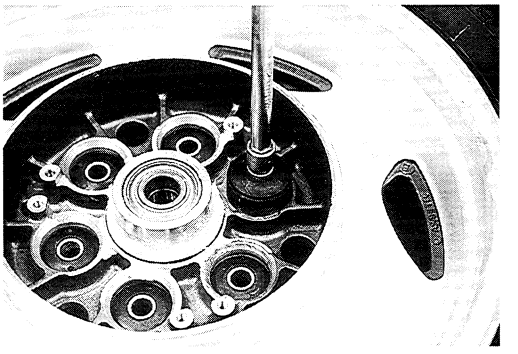

**DRIVEN JOINT**

- Install the driven joint.

*NOTE:*
*Apply grease to the O-ring and the final gear spline before installing the driven joint.*

**99000-25010: SUZUKI SUPER GREASE "A"**

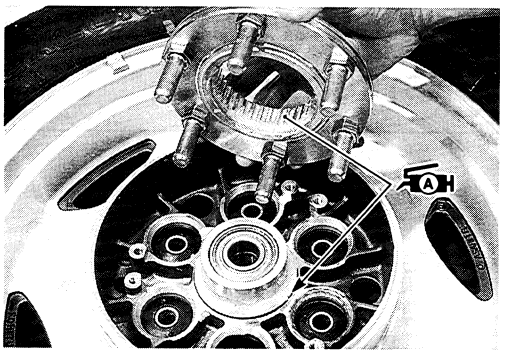

- Apply THREAD LOCK SUPER "1303" to the thread of driven joint stopper bolts.

**99000-32030: THREAD LOCK SUPER "1303"**

- Tighten the driven joint stopper bolts to the specified torque.

**Driven joint stopper bolt: 10 N·m (1.0 kg-m, 7.0 lb-ft)**

- Bend up the washer to lock the bolts.

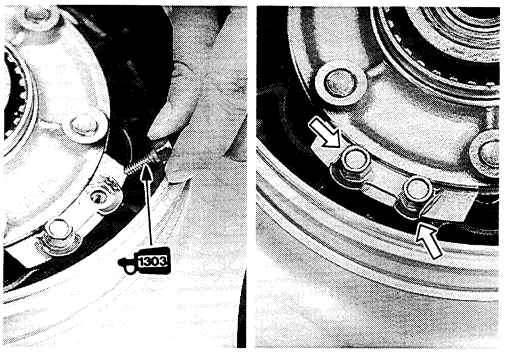

**REAR WHEEL**

- Install the spacer ①.
- Apply grease to the final gear spline before installing the rear wheel.

**99000-25010: SUZUKI SUPER GREASE "A"**

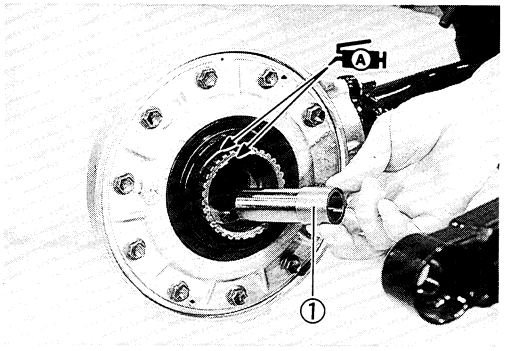

- Remount the rear wheel spacer and rear axle.

*NOTE:*
*Refer to the page 6-28 for the spacer positioning.*

**⚠ CAUTION**

**When installing the rear wheel, position the brake disc between the brake pads. Be careful not to damage the brake pads.**

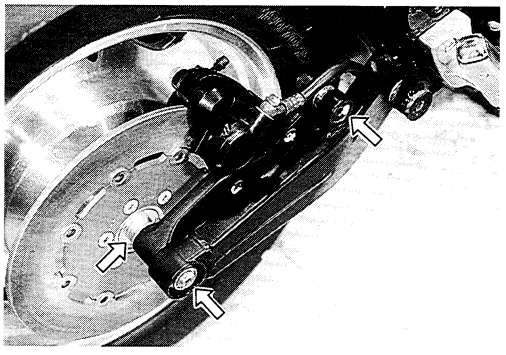

- Tighten the rear axle nut and the caliper mounting bracket bolt to the specified torque.

**Rear axle nut: 110 N·m (11.0 kg-m, 79.5 lb-ft)**
**Rear brake caliper mounting bracket nut: 60 N·m (6.0 kg-m, 43.5 lb-ft)**

*NOTE:*
*After remounting the rear wheel, pump with the brake pedal a few times to check for proper brake operation.*

- Install the exhaust pipe and muffler. (See p. 3-15.)
- Install the rear fender (See p. 6-4.)

# REAR SUSPENSION

## CONSTRUCTION

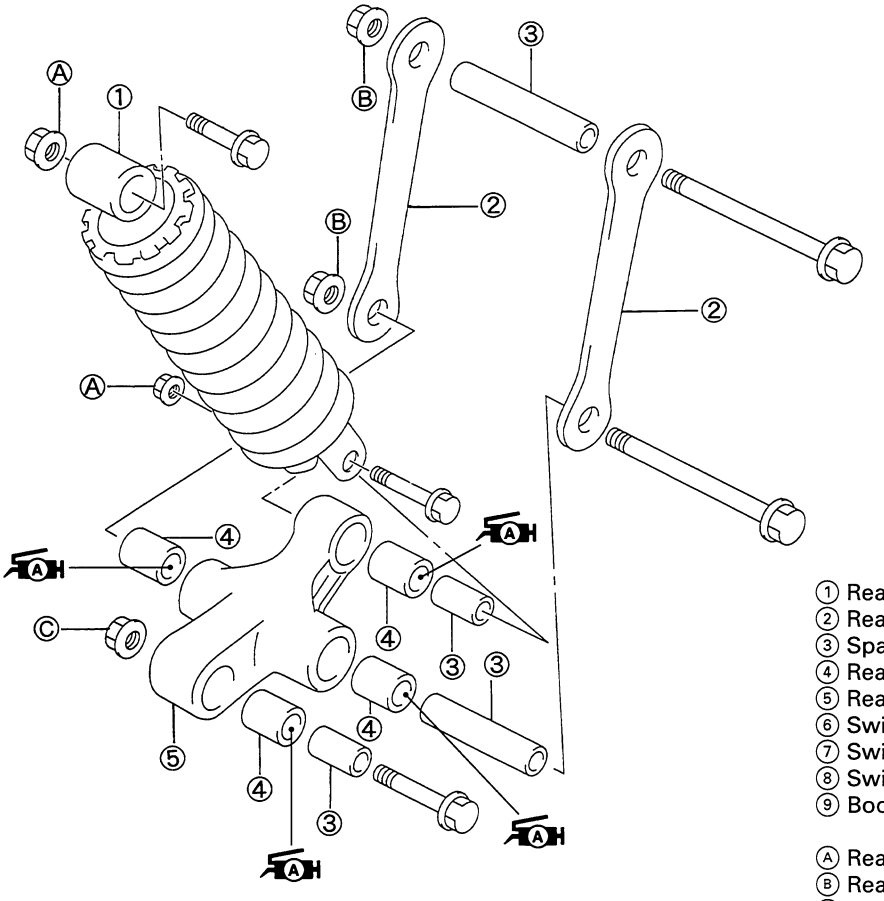

① Rear shock absorber
② Rear cushion rod
③ Spacer
④ Rear cushion lever bearing
⑤ Rear cushion lever
⑥ Swingarm pivot bearing
⑦ Swingarm bearing
⑧ Swingarm
⑨ Boot

Ⓐ Rear shock absorber mounting nut
Ⓑ Rear cushion rod mounting nut
Ⓒ Rear cushion lever mounting nut
Ⓓ Rear swingarm pivot bolt lock nut
Ⓔ Rear swingarm pivot bolt (Right)
Ⓕ Rear swingarm pivot bolt (Left)

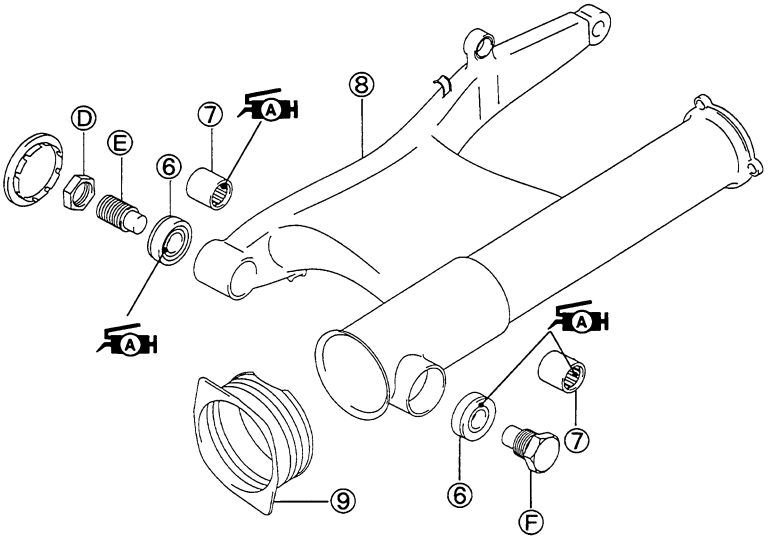

| ITEM | N·m | kg-m | lb-ft |
|---|---|---|---|
| Ⓐ | 50 | 5.0 | 36.0 |
| Ⓑ | 135 | 13.5 | 97.5 |
| Ⓒ | 135 | 13.5 | 97.5 |
| Ⓓ | 100 | 10.0 | 72.5 |
| Ⓔ | 9.5 | 0.95 | 7.0 |
| Ⓕ | 100 | 10.0 | 72.5 |

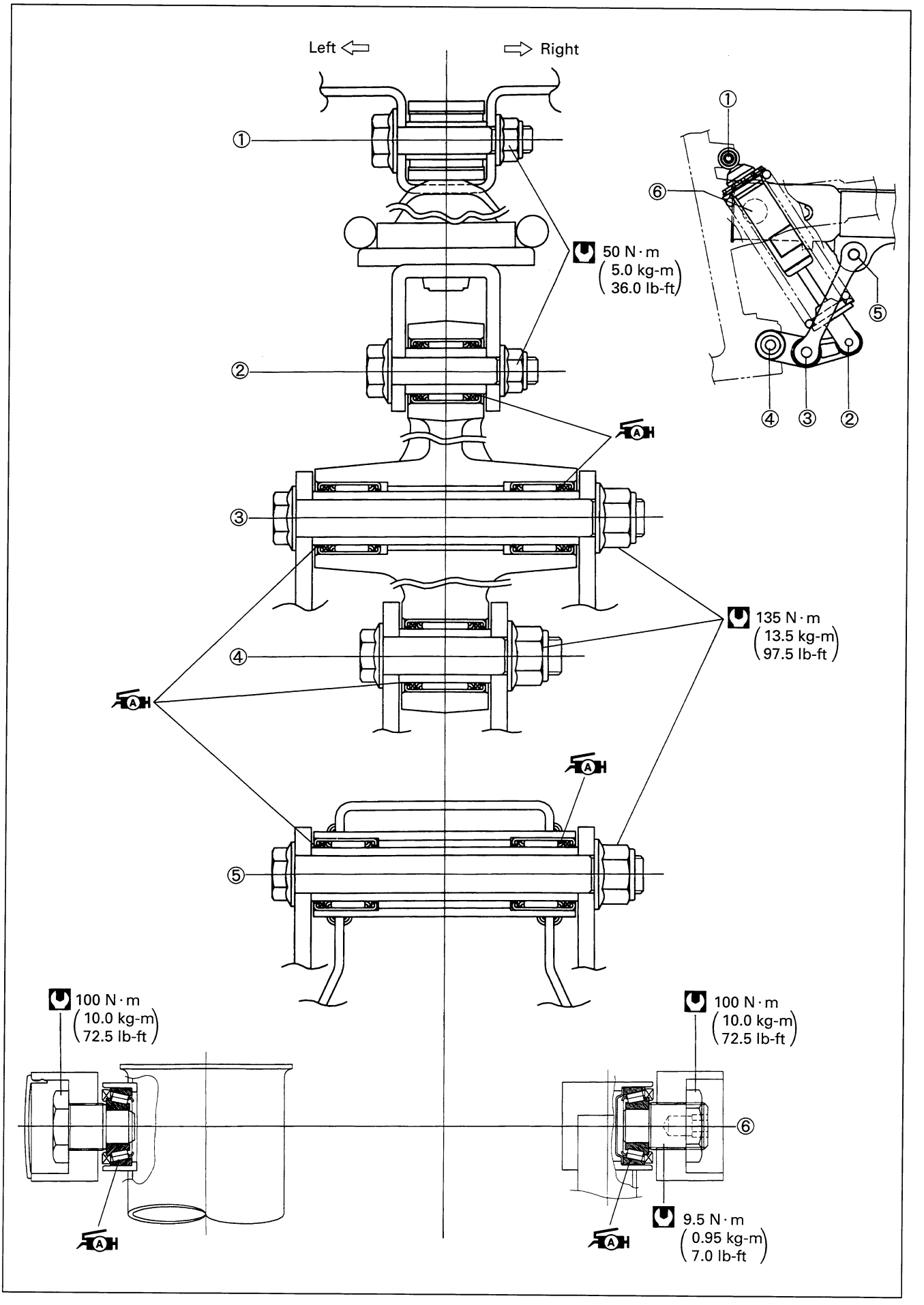
Left
Right
①
②
③
④
⑤
⑥
50 N·m
(5.0 kg-m
36.0 lb-ft)
135 N·m
(13.5 kg-m
97.5 lb-ft)
100 N·m
(10.0 kg-m
72.5 lb-ft)
100 N·m
(10.0 kg-m
72.5 lb-ft)
9.5 N·m
(0.95 kg-m
7.0 lb-ft)

## REMOVAL

- Remove the rear wheel. (See. p. 6-29.)
- Remove the final gear case with propeller shaft.

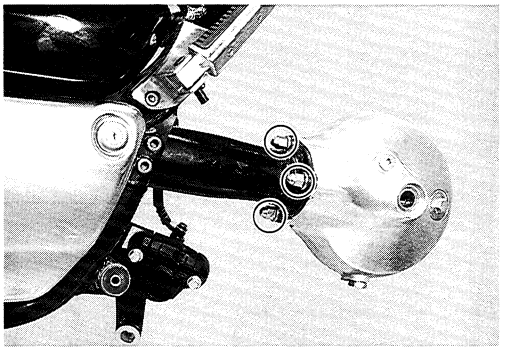

- Remove the left and right side frame covers. (See p. 6-2.)
- Remove the tool box outer cover and the tool box.

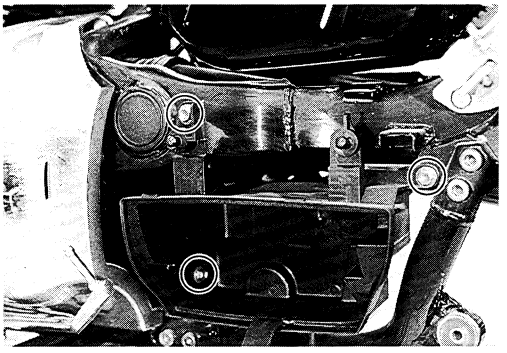

- Remove the brake hose from the brake hose guides.

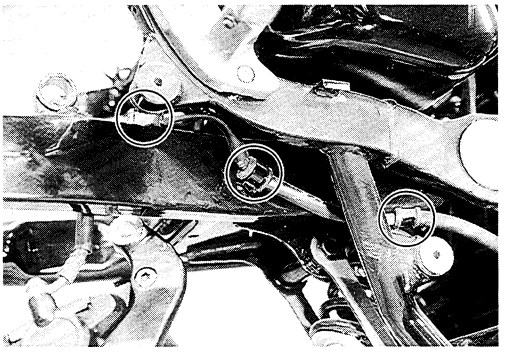

- Remove the cushion lever mounting bolt and nut.

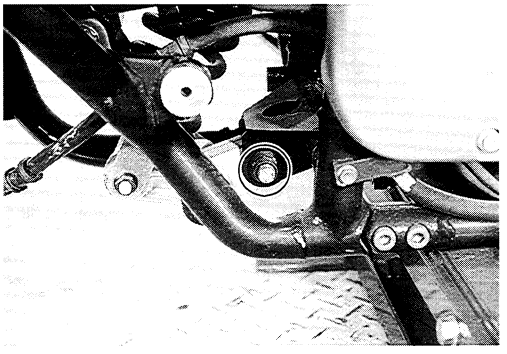

- Remove the shock absorber upper mounting bolt and nut.

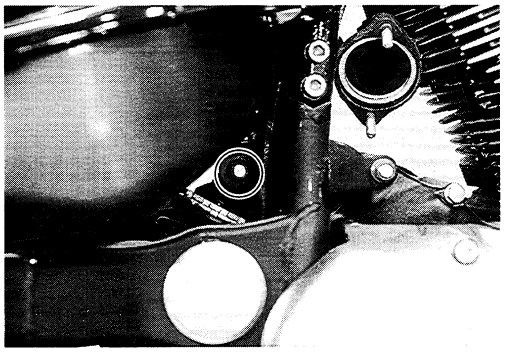

- Remove the swingarm pivot bolt caps.

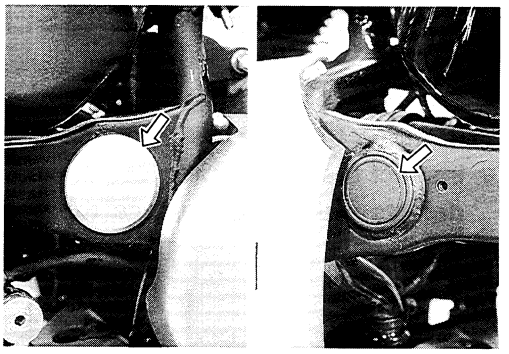

- Remove the right side swingarm pivot bolt lock nut ①.
- Remove the left and right side swingarm pivot bolts ②.

*NOTE:*
*Slightly loosen the cushion rod mounting nuts and the shock absorber lower mounting nut before removing the swingarm to facilitate later disassembly.*

- Remove the rear suspension assembly.

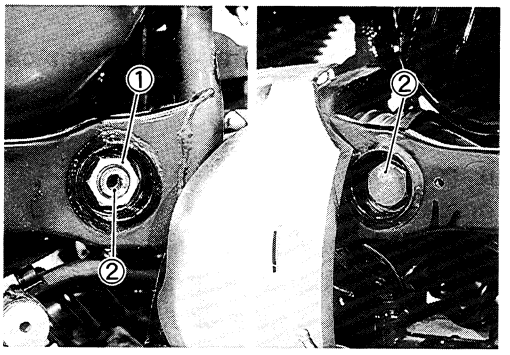


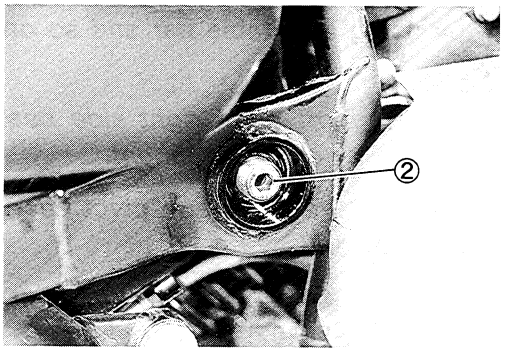


- Remove the tapered roller bearings.

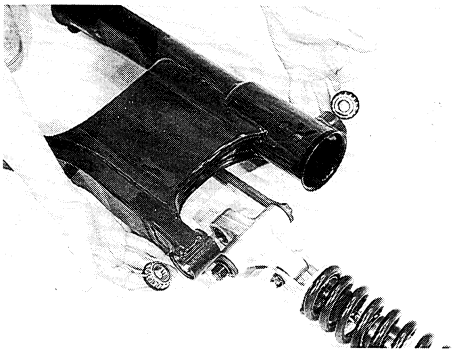

- Remove the shock absorber, cushion lever and cushion rod.

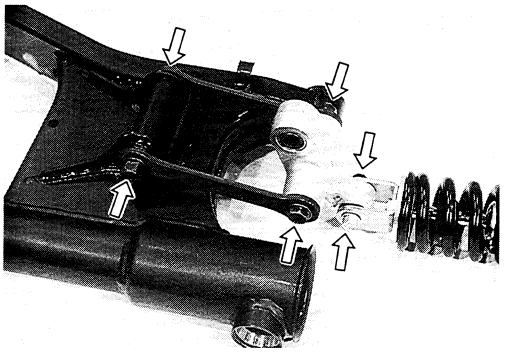

# INSPECTION AND DISASSEMBLY

## SPACER

- Remove spacer from swingarm.
- Remove the spacers from the cushion lever.
- Inspect the spacers for any flaws or other damage. If any defects are found, replace the spacers with new ones.

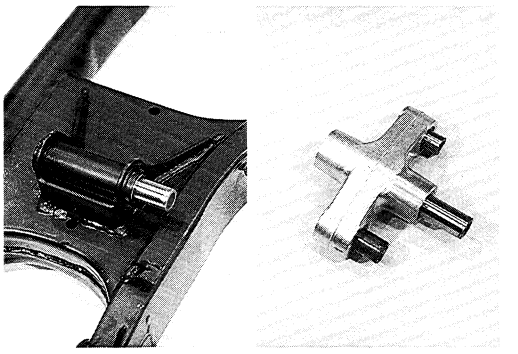

## SWINGARM BEARING

Insert the spacer into swingarm cushion rod upper side bearing and check the play to move the spacer up and down.

If excessive play is noted, replace the bearing with a new one.

Inspect the swingarm pivot bearing, its race and dust seal for wear or damage. If any defects are found, replace the bearing with a new one.

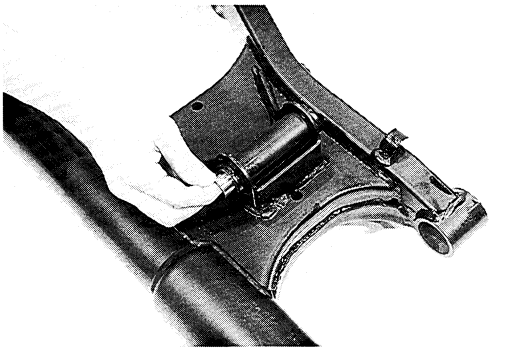

- Remove the swingarm pivot right side bearing plate ① by using a suitable bar and so on.

*NOTE:*
*The swingarm pivot right side bearing and its plate are available as one component.*

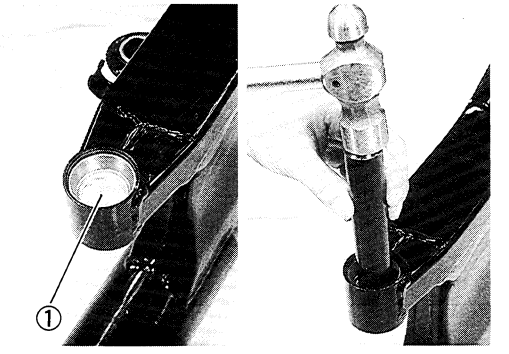


- Remove the swingarm pivot bearing races by using the special tools.

**TOOL 09941-64511: Bearing remover**
**09930-30102: Sliding shaft**

**⚠ CAUTION**

**The removed bearings must be replaced with new ones.**

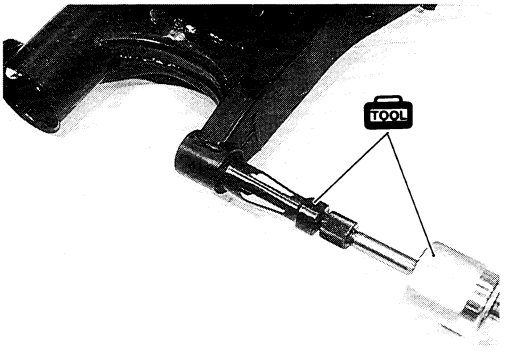


- Remove the swingarm cushion rod upper side bearing by using the special tools.

**TOOL 09923-74510: Bearing remover**
**09930-30102: Sliding shaft**

**⚠ CAUTION**

**The removed bearings must be replaced with new ones.**

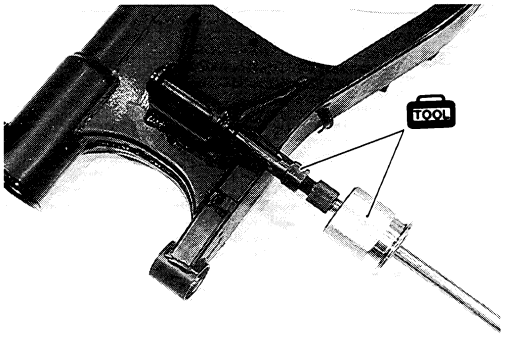

### CUSHION LEVER BEARING

Insert the spacer into bearing and check the play to move the spacer up and down. If an excessive play is noted, replace the bearing with a new one.

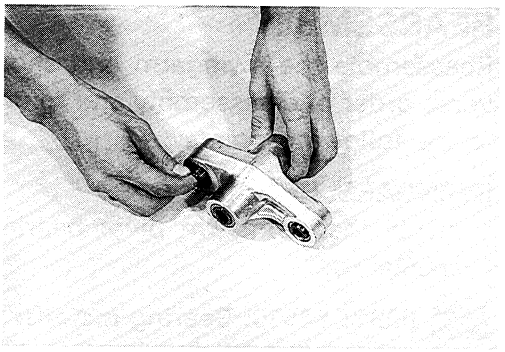

- Remove the cushion rod lower side bearing ① by using the special tools.

**TOOL 09923-74510: Bearing remover**
**09930-30102: Sliding shaft**

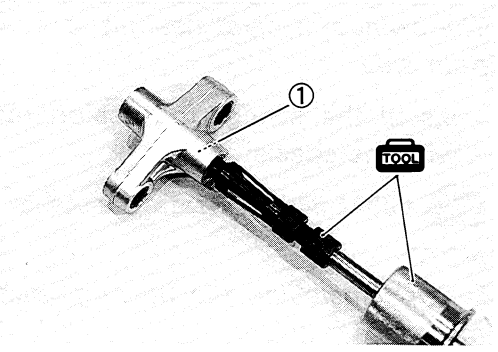


**⚠ CAUTION**

**The removed bearings must be replaced with new ones.**

- Remove the cushion lever mounting bearing ② and shock absorber lower side bearing ③ by using the special tools.

**TOOL 09925-98221: Bearing remover (for ②)**
**09943-88211: Bearing remover (for ③)**

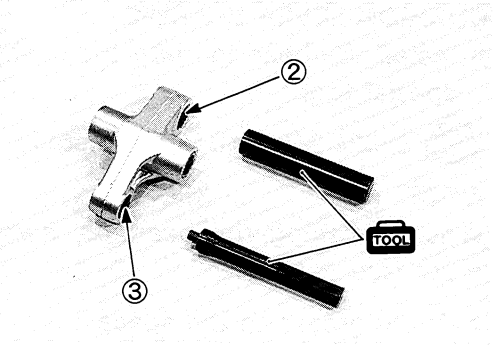


**⚠ CAUTION**

**The removed bearings must be replaced with new ones.**

### SHOCK ABSORBER

Inspect the shock absorber body and bush for damage and oil leakage. If any defects are found, replace the shock absorber with a new one.

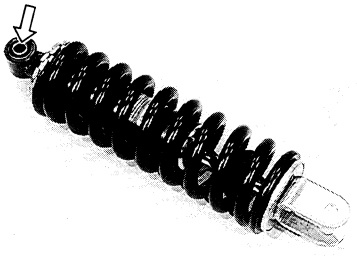

**⚠ CAUTION**

**Do not attempt to disassemble the rear shock absorber unit. It is unserviceable.**

### SPRING PRE-LOAD ADJUSTMENT

The set length 217 mm (8.54 in) provides the maximum spring pre-load.
The set length 227 mm (8.94 in) provides the minimum spring pre-load.

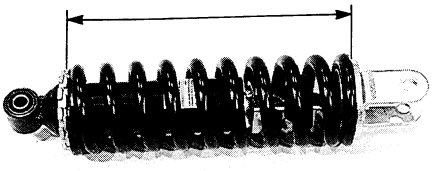

**Standard**
**Rear shock absorber spring set length: 222.0 mm (8.74 in)**

## REASSEMBLY

Reassemble the swingarm and shock absorber in the reverse order of disassembly and removal, and pay attention to the following points:

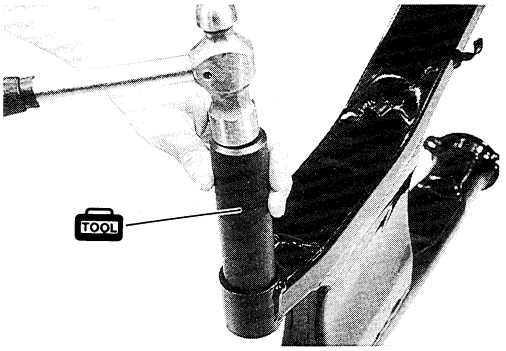


### SWINGARM BEARING

- Install the swingarm pivot bearing races by using the special tool.

**TOOL 09913-84510: Bearing installer**

*NOTE:*
*The swingarm pivot bearing race with plate is positioned right side.*

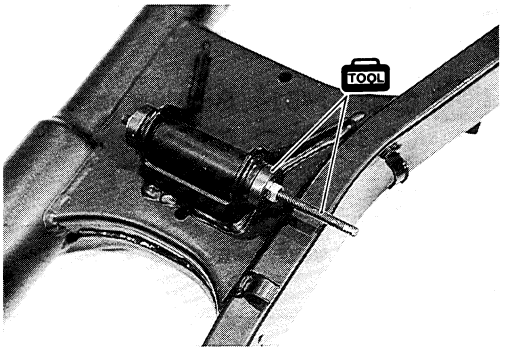


- Install the swingarm cushion rod upper side bearing with the special tool.

**TOOL 09924-84521: Bearing installer**

*NOTE:*
*When reinstalling the bearing, stamped mark of bearing must face outside.*

### CUSHION LEVER BEARING

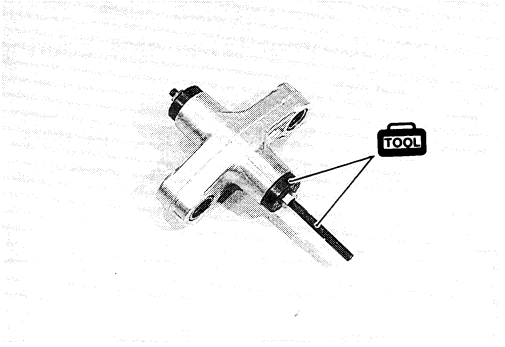


- Install the bearings into the cushion lever by using the special tool.

**TOOL 09924-84521: Bearing installer**

*NOTE:*
*When installing the bearings, stamped mark of bearing must face outside.*

- Apply grease to the spacers and bearings.

**99000-25010: SUZUKI SUPER GREASE "A"**

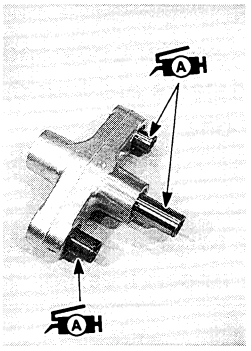


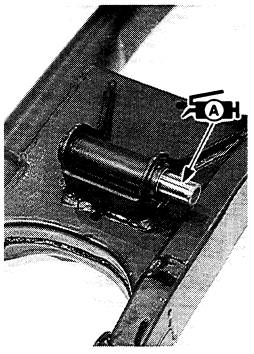


- Assemble the shock absorber, cushion lever and cushion rods onto the swingarm. (See p. 6-34.)

**Shock absorber mounting nut ①: 50 N·m (5.0 kg-m, 36.0 lb-ft)**
**Cushion rod mounting nut ②: 135 N·m (13.5 kg-m, 97.5 lb-ft)**

*NOTE:*
*The stamped marks Ⓐ on the cushion rod should be face outside.*

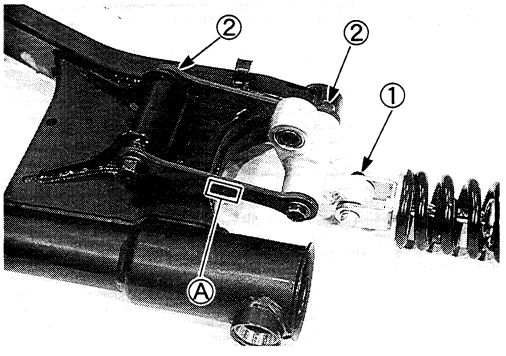

## REMOUNTING

Remount the swingarm and shock absorber in the reverse order of disassembly and removal, and pay attention to the following points.

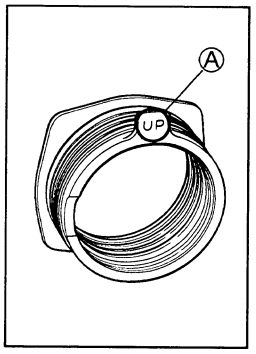


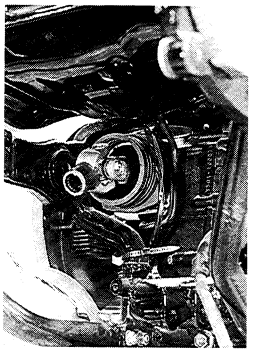

### SWINGARM

- Before installing the swingarm, install the boot and the universal joint.

*NOTE:*
*Make sure that the "UP" mark Ⓐ on the boot faces up.*

- Install the swingarm assembly, its pivot bearings and bolts (①, ②).

*NOTE:*
*Apply grease to the swingarm pivot bearings.*

**99000-25010: SUZUKI SUPER GREASE "A"**

①: For left side swingarm pivot bolt
②: For right side swingarm pivot bolt

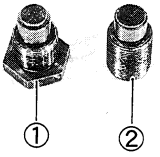


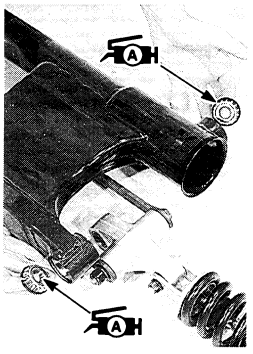

- Tighten the left side swingarm pivot bolt ① to the specified torque.

**Swingarm pivot bolt (left side): 100 N·m (10.0 kg-m, 72.5 lb-ft)**

*NOTE:*
*Before tightening the left side swingarm pivot bolt ①, loosen the right side one ②.*

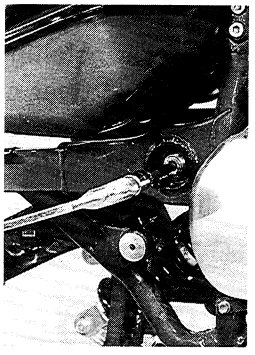

- Tighten the right side swingarm pivot bolt ② to the specified torque.

**Swingarm pivot bolt (right side): 9.5 N·m (0.95 kg-m, 7.0 lb-ft)**

- Tighten the swingarm pivot lock nut ③ to the specified torque.

**Swingarm pivot lock nut: 100 N·m (10.0 kg-m, 72.5 lb-ft)**

- Install the swingarm pivot bolt caps.

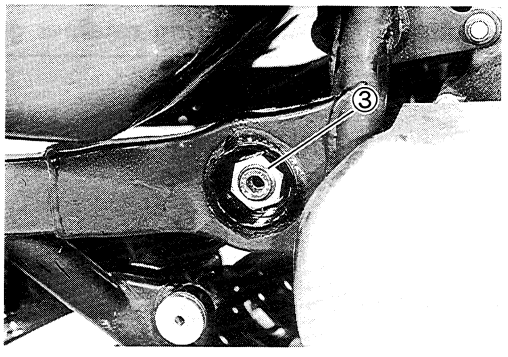


*NOTE:*
*After tightening the swingarm pivot lock nut, be sure to check the swingarm operation.*

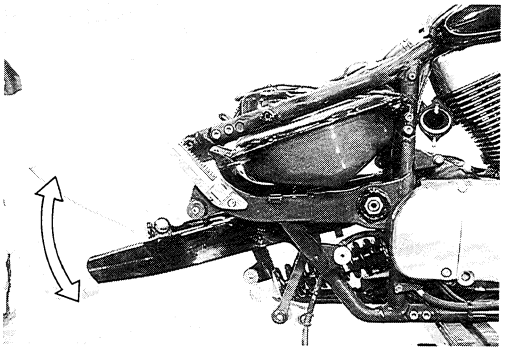

## SHOCK ABSORBER AND CUSHION LEVER MOUNTING NUT

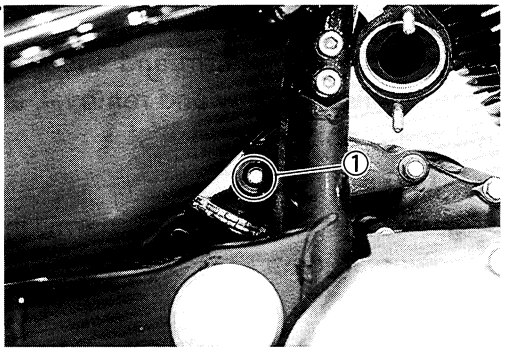


- Tighten the shock absorber upper mounting nut ① to the specified torque.

**Shock absorber mounting nut: 50 N·m (5.0 kg-m, 36.0 lb-ft)**

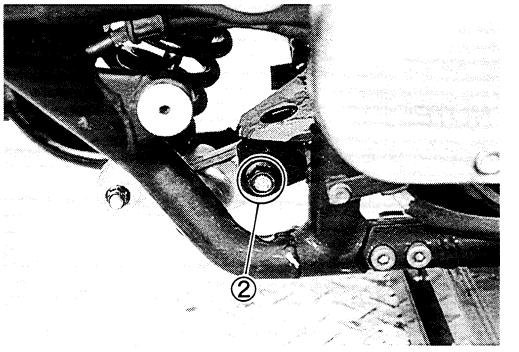


- Tighten the cushion lever mounting nut ② to the specified torque.

**Cushion lever mounting nut: 135 N·m (13.5 kg-m, 97.5 lb-ft)**

## FINAL GEAR CASE

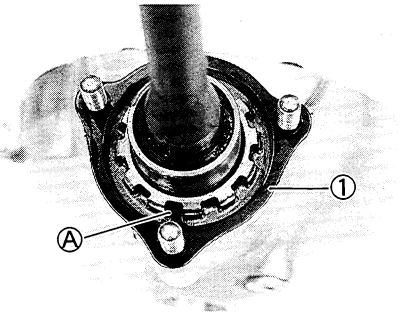


- Before installing the tool box and frame covers, install the final gear case as follows.
- Install the plate to the final gear case ①. Apply SUZUKI BOND "1207B" to the mating surface of swingarm and final gear case.

**1207B 99000-31140: SUZUKI BOND "1207B"**

**⚠ CAUTION**

**When installing the plate ①, align the lug Ⓐ of the plate ① to the bearing retainer groove.**

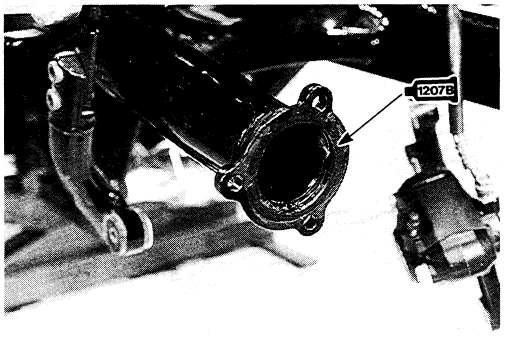


*NOTE:*
*Two kinds of plates are available to lock the bearing retainer at the proper position.*

- Apply Lithium Base Molybdenum grease (NLGI #2) to the propeller shaft spline.

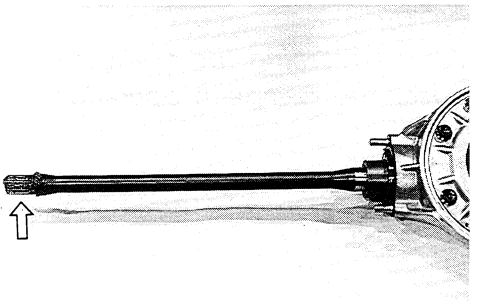

*NOTE:*
*To install the final gear case easily, move the dust boot front and the universal joint back. Engage the universal joint to the propeller shaft first and then engage it to the secondary driven bevel gear shaft.*

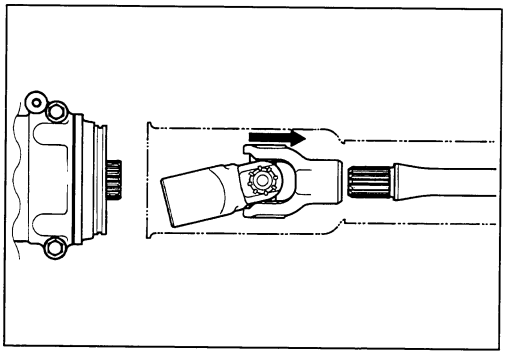

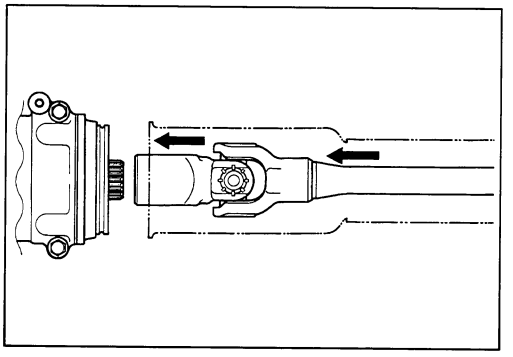

- Install the final gear case nuts and washers.
- Tighten the final gear case mounting nuts to the specified torque.

**Final gear case mounting nut: 40 N·m (4.0 kg-m, 29.0 lb-ft)**

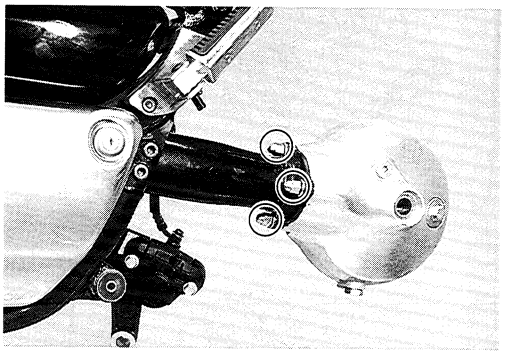

- Install the rear wheel. (See p. 6-32.)
- Install the exhaust pipes and mufflers. (See p. 3-15.)

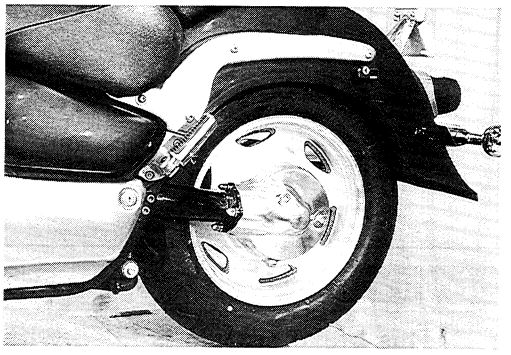

# FRONT BRAKE

## CONSTRUCTION

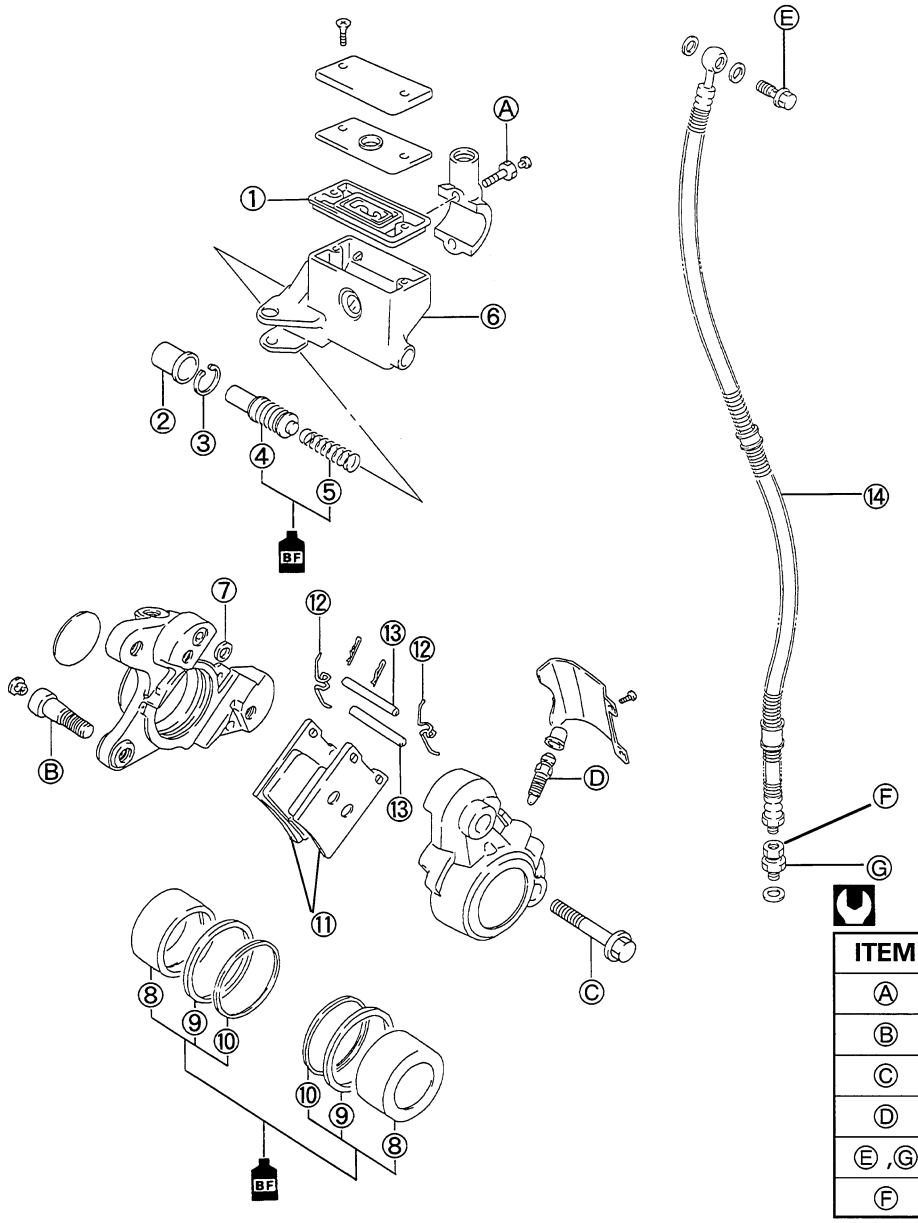


① Diaphragm
② Dust boot
③ Circlip
④ Piston/Primary cup/ Secondary cup
⑤ Return spring
⑥ Master cylinder
⑦ O-ring
⑧ Piston
⑨ Piston seal
⑩ Dust seal
⑪ Brake pad
⑫ Spring
⑬ Pad mounting pin
⑭ Brake hose

Ⓐ Front master cylinder mounting bolt
Ⓑ Brake caliper mounting bolt
Ⓒ Brake caliper housing bolt
Ⓓ Brake caliper air bleeder valve
Ⓔ Brake hose union bolt
Ⓕ Brake hose joint nut
Ⓖ Brake hose adaptor

| ITEM | N·m | kg-m | lb-ft |
|---|---|---|---|
| Ⓐ | 10 | 1.0 | 7.0 |
| Ⓑ | 35 | 3.5 | 25.5 |
| Ⓒ | 33 | 3.3 | 24.0 |
| Ⓓ | 7.5 | 0.75 | 5.5 |
| Ⓔ ,Ⓖ | 23 | 2.3 | 16.5 |
| Ⓕ | 15 | 1.5 | 11.0 |

**⚠ WARNING**

* **This brake system is filled with a ethylene glycol-based DOT 4 brake fluid. Do not use or mix different types of fluid, such as silicone-based or petroleum-based brake fluids.**
* **Do not use any brake fluid taken from old, used or unsealed containers. Never reuse brake fluid left over from the last servicing or which has been stored for long periods of time.**
* **When storing the brake fluid, seal the container completely and keep it away from children.**
* **When replenishing brake fluid, take care not to get dust into fluid.**
* **When washing brake components, use new brake fluid. Never use cleaning solvent.**
* **A contaminated brake disc or brake pad reduces braking performance. Discard contaminated pads and clean the disc with high quality brake cleaner or a neutral detergent.**

**⚠ CAUTION**

**Handle brake fluid with care: the fluid reacts chemically with paint, plastics, rubber materials etc.**

## BRAKE PAD REPLACEMENT

- Remove the bolt caps and brake caliper mounting bolts ①.
- Remove the dust cover ②.
- Remove the brake pads by removing the clips ③, pad mounting pins ④ and springs ⑤.

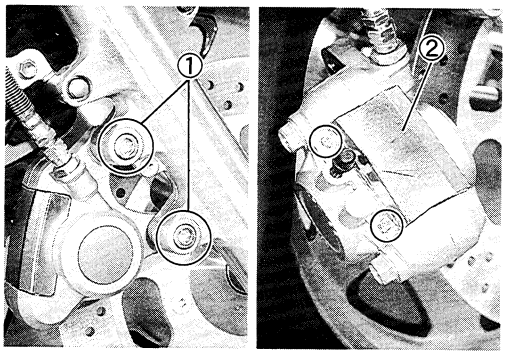


**⚠ CAUTION**

> * **Do not operate the brake lever during or after brake pad removal.**
> * **Replace the brake pads as a set, otherwise braking performance will be adversely affected.**

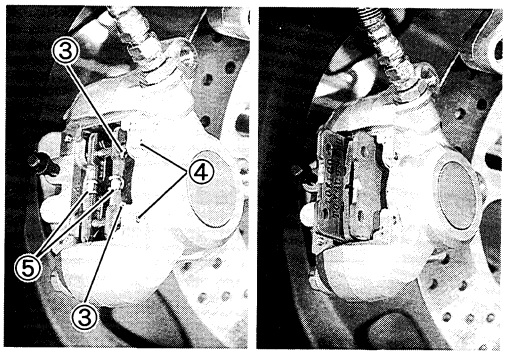


- Install the new brake pads.
- Tighten the brake caliper mounting bolts to the specified torque.

**Brake caliper mounting bolt: 35 N·m (3.5 kg-m, 25.5 lb-ft)**

*NOTE:*
*After replacing the brake pads, pump the brake lever a few times to check for proper brake operation and then check the brake fluid level.*

## BRAKE FLUID REPLACEMENT

- Place the motorcycle on a level surface and keep the handlebars straight.
- Remove the master cylinder reservoir cap and diaphragm.
- Suck up the old brake fluid as much as possible.
- Fill the reservoir with new brake fluid.

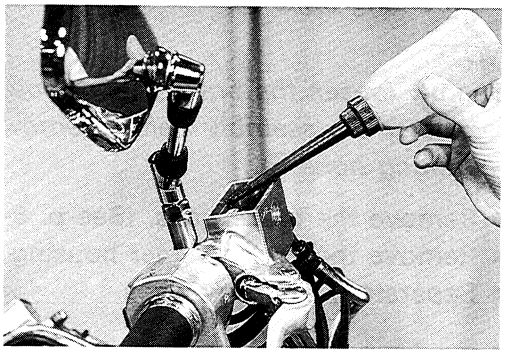

**Specification and Classification: DOT 4**

- Connect a clear hose ① to the air bleeder valve ② and insert the other end of the hose into a receptacle.
- Loosen the air bleeder valve and pump the brake lever until the old brake fluid is completely out of the brake system.
- Close the air bleeder valve and disconnect the clear hose. Fill the reservoir with new brake fluid to the upper end of the inspection window.

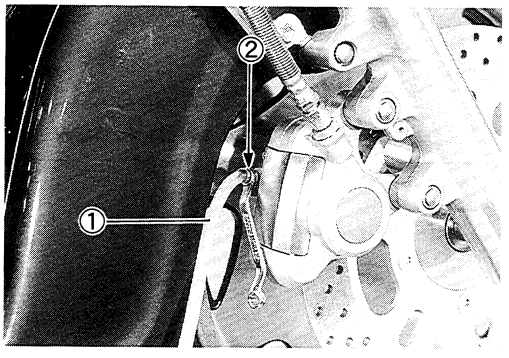


**⚠ CAUTION**

> **Bleed air from the brake system. (See p. 2-13.)**

**Air bleeder valve: 7.5 N·m (0.75 kg-m, 5.5 lb-ft)**

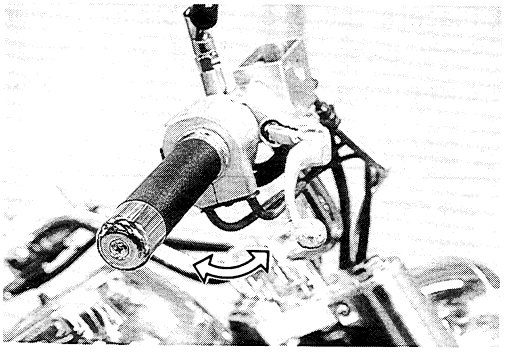

## BRAKE CALIPER REMOVAL AND DISASSEMBLY

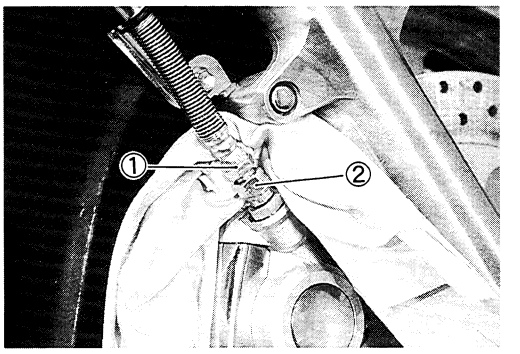


- Hold the brake hose ① and loosen the brake hose joint nut ②.
- Disconnect the brake hose from the brake caliper and allow the brake fluid to drain into a suitable receptacle.

**⚠ CAUTION**

**Never reuse the brake fluid left over from previous servicing and which has been stored for long periods of time.**

**⚠ WARNING**

**Brake fluid, if it leaks, will interfere with safe running and discolor painted surfaces. Check the brake hose and hose joints for cracks and fluid leakage.**

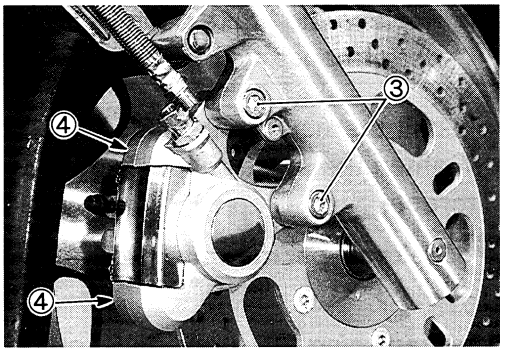


- Remove the brake caliper mounting bolt caps.
- Remove the brake caliper by removing the brake caliper mounting bolts ③.

*NOTE:*
*Slightly loosen the brake caliper housing bolts ④ to facilitate later disassembly before removing the brake caliper mounting bolts ③.*

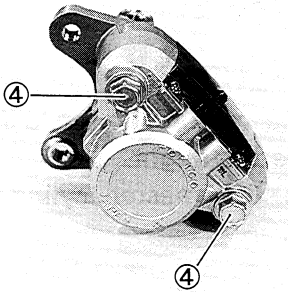


- Remove the brake pads. (See p. 6-44.)
- Remove the brake caliper housing bolts ④.
- Separate the brake halves.

- Remove the O-ring ⑤.

**⚠ CAUTION**

**Replace the O-ring with a new one.**

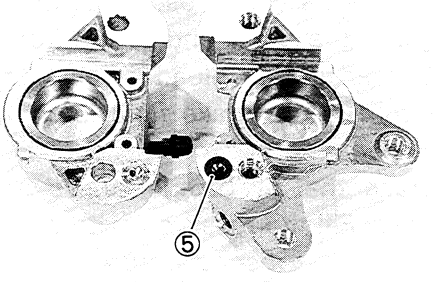


- Place a rag over the brake caliper piston to prevent it from popping out and then force out the piston using compressed air.

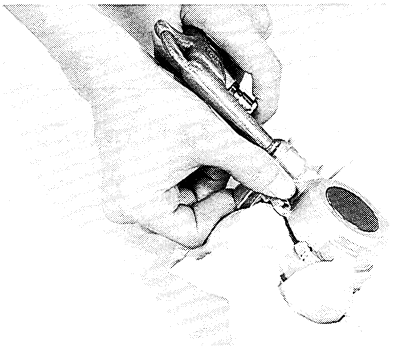

**⚠ CAUTION**

**Do not use high pressure air to prevent brake caliper piston damage.**

- Remove the dust seals and piston seals.

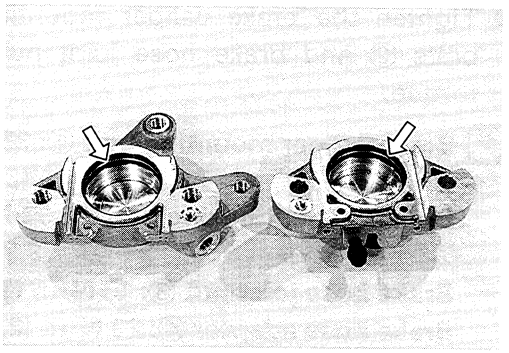

**⚠ CAUTION**

**Do not reuse the dust seals and piston seals to prevent fluid leakage.**

## BRAKE CALIPER INSPECTION

### BRAKE CALIPER

Inspect each brake caliper cylinder wall for nicks, scratches or other damage.

### BRAKE CALIPER PISTONS

Inspect the brake caliper pistons for any scratches or other damage.

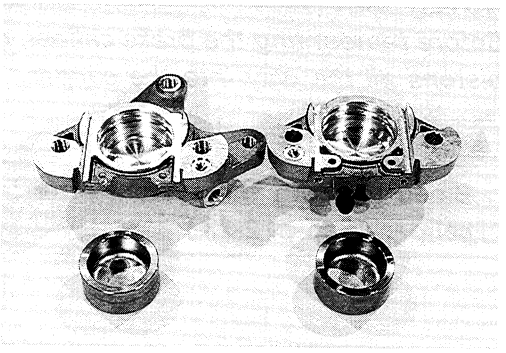

## BRAKE CALIPER REASSEMBLY AND REMOUNTING

Reassemble and remount the brake caliper in the reverse order of removal and disassembly. Pay attention to the following points:

- Wash the caliper bores and pistons with the specified brake fluid. Thoroughly wash the dust seal grooves and piston seal grooves.

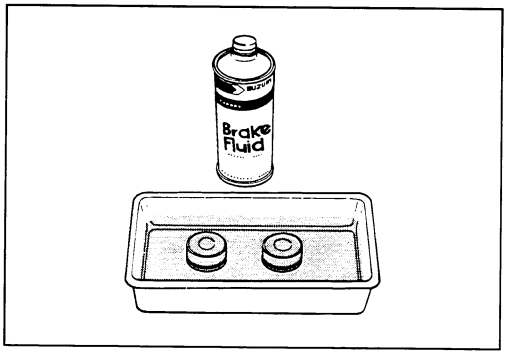


BF **Specification and classification: DOT 4**

**⚠ CAUTION**

- **Wash the brake caliper components with new brake fluid before reassembly.**
- **Do not wipe the brake fluid off after washing the components.**
- **When washing the components, use the specified brake fluid. Never use different types of fluid or cleaning solvent such as gasoline, kerosine, etc.**
- **Replace the piston seals and dust seals with new ones.**
- **Apply brake fluid to all of the seals, brake caliper bores and pistons before reassembly.**

- Tighten the brake caliper mounting bolts ①, housing bolts ② and brake hose joint nut ③ to the specified torque.

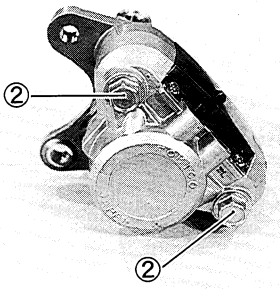


**Brake caliper mounting bolt ①: 35 N·m (3.5 kg-m, 25.5 lb-ft)**
**Brake caliper housing bolt ②: 33 N·m (3.3 kg-m, 24.0 lb-ft)**
**Brake hose joint nut ③: 15 N·m (1.5 kg-m, 11.0 lb-ft)**
**Brake hose adaptor ④: 23 N·m (2.3 kg-m, 16.5 lb-ft)**

*NOTE:*
*Before remounting the brake caliper, push the brake caliper pistons all the way into the caliper.*

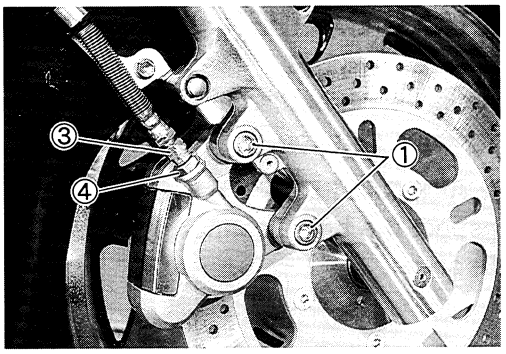


**⚠ CAUTION**

**Bleed air from the system after installing the brake caliper. (See p. 2-13.)**

## BRAKE DISC INSPECTION

- Remove the front and rear wheels. (See pp. 6-7 and 6-29.)

Check the brake disc for damage or cracks. Measure the thickness using the micrometer.
Replace the brake disc if the thickness is less than the service limit or if damage is found.

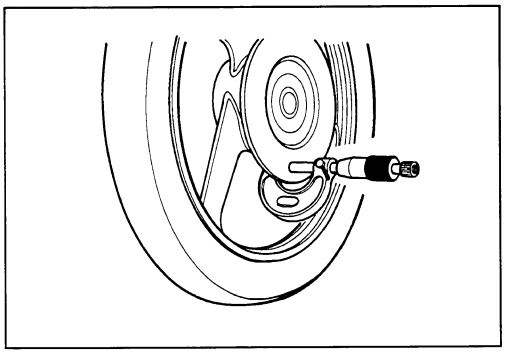

**TOOL 09900-20205: Micrometer (0–25 mm)**

**Service Limit**
**Brake disc thickness (Front): 5.5 mm (0.22 in)**
**(Rear) : 6.3 mm (0.25 in)**

Measure the runout using the dial gauge.
Replace the disc if the runout exceeds the service limit.

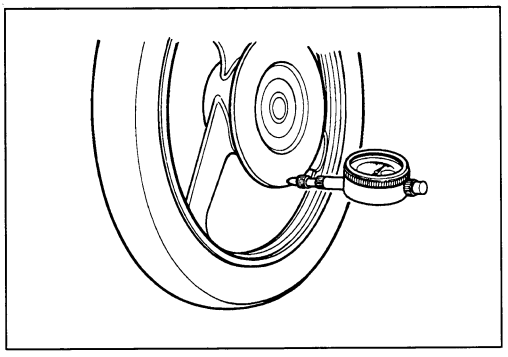

**TOOL 09900-20606: Dial gauge (1/100 mm, 10 mm)**
**09900-20701: Magnetic stand**

**Service Limit**
**Brake disc runout (Front and Rear): 0.3 mm (0.012 in)**

## MASTER CYLINDER REMOVAL AND DISASSEMBLY

- Disconnect the front brake light switch lead wires ①.
- Remove the rear view mirror.

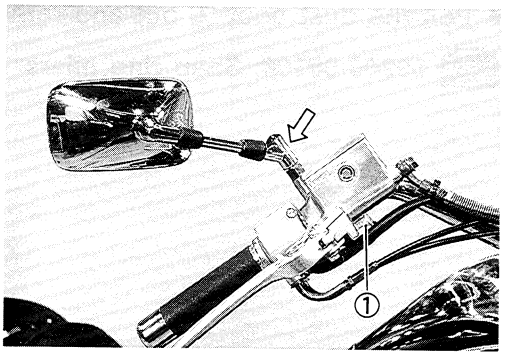


- Place a rag underneath the brake hose union bolt on the master cylinder to catch any spilt brake fluid. Remove the brake hose union bolt and disconnect the brake hose.

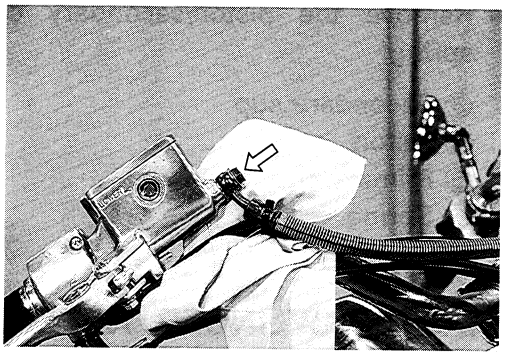

**⚠ CAUTION**

**Immediately wipe off any brake fluid contacting any part of the motorcycle. The brake fluid reacts chemically with paint, plastics and rubber materials, etc., and will damage them severely.**

- Remove the bolt caps.
- Remove the master cylinder assembly by removing its mounting bolts.

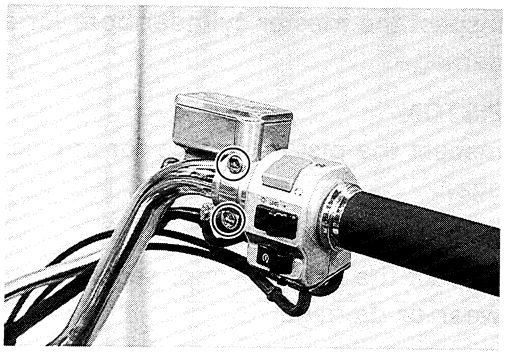

- Remove the brake lever ② and brake light switch ③.

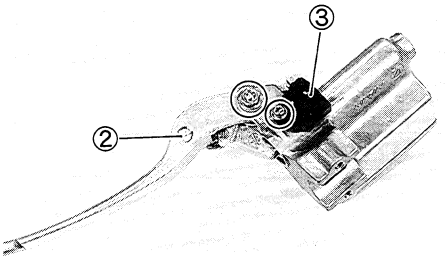


- Remove the reservoir cap and diaphragm.
- Drain the brake fluid.

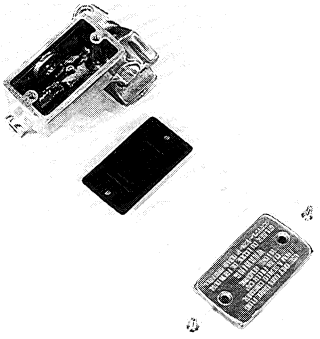

- Pull the dust boot ① out and remove the circlip ②.

**09900-06108: Snap ring pliers**

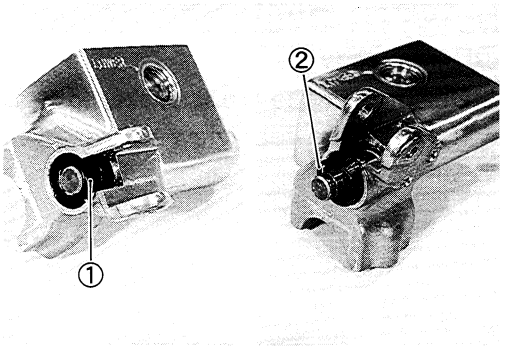


- Remove the piston/secondary cup/primary cup and spring.

  ③ Secondary cup
  ④ Piston
  ⑤ Primary cup
  ⑥ Spring

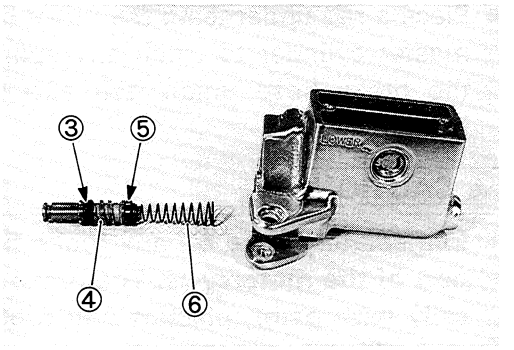


## MASTER CYLINDER INSPECTION

### MASTER CYLINDER

Inspect the master cylinder bore for any scratches or other damage.

### PISTON

Inspect the piston surface for any scratches or other damage.

### RUBBER PARTS

Inspect the primary cup, secondary cup and dust seal for wear or damage.

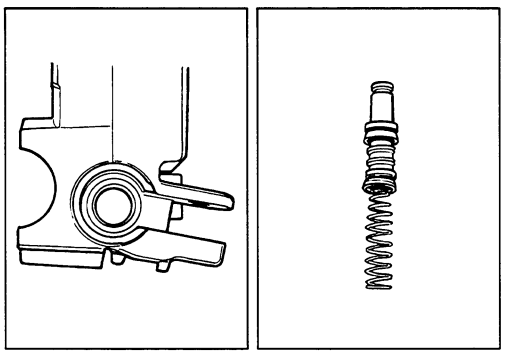

## MASTER CYLINDER REASSEMBLY AND REMOUNTING

Reassemble and remount the master cylinder in the reverse order of removal and disassembly. Pay attention to the following points:

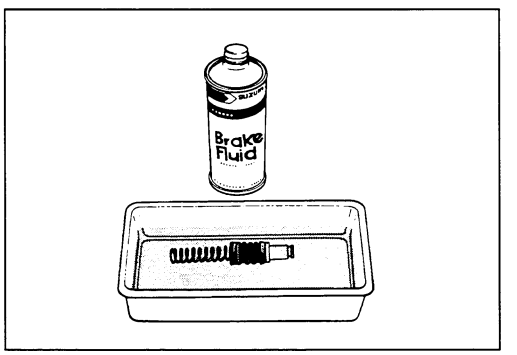


**⚠ CAUTION**

- **Wash the master cylinder components with new brake fluid before reassembly.**
- **Do not wipe the brake fluid off after washing the components.**
- **When washing the components, use the specified brake fluid. Never use different types of fluid or cleaning solvents such as gasoline, kerosine, etc.**
- **Apply brake fluid to the master cylinder bore and all of the master cylinder components before reassembly.**

**Specification and classification: DOT 4**

- When installing the brake light switch, align the projection on the switch with the hole in the master cylinder.

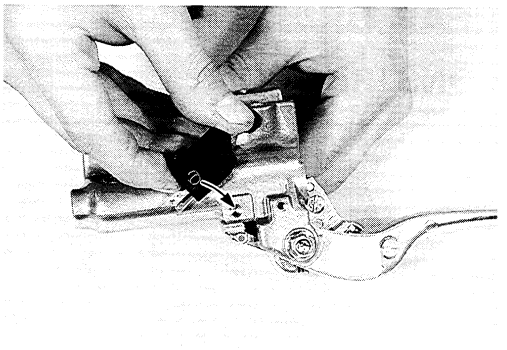

- When remounting the master cylinder onto the handlebars, align the master cylinder holder's mating surface ① with the punch mark ② on the handlebars and tighten the upper clamp bolt first.

**Master cylinder mount bolt: 10 N·m (1.0 kg-m, 7.0 lb-ft)**

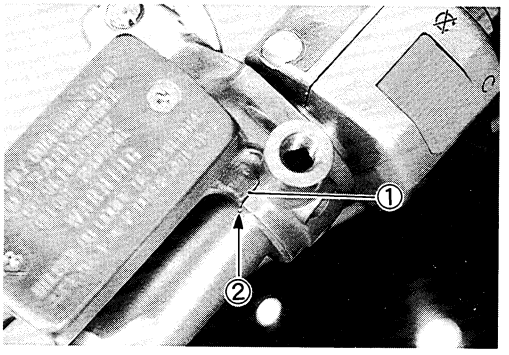


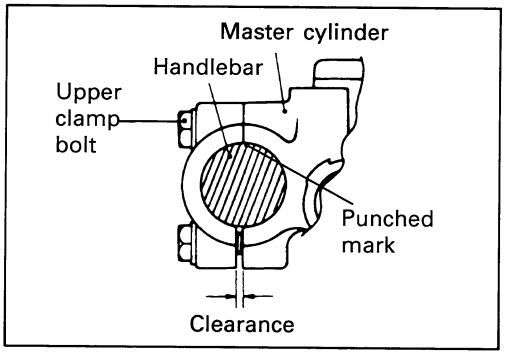


- Tighten the brake hose union bolt to the specified torque.

**Brake hose union bolt: 23 N·m (2.3 kg-m, 16.5 lb-ft)**

**⚠ CAUTION**

**Bleed air from the brake system after installing the master cylinder. (See p. 2-13.)**

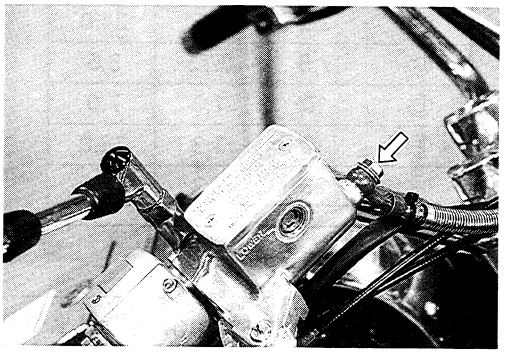

# REAR BRAKE

## CONSTRUCTION

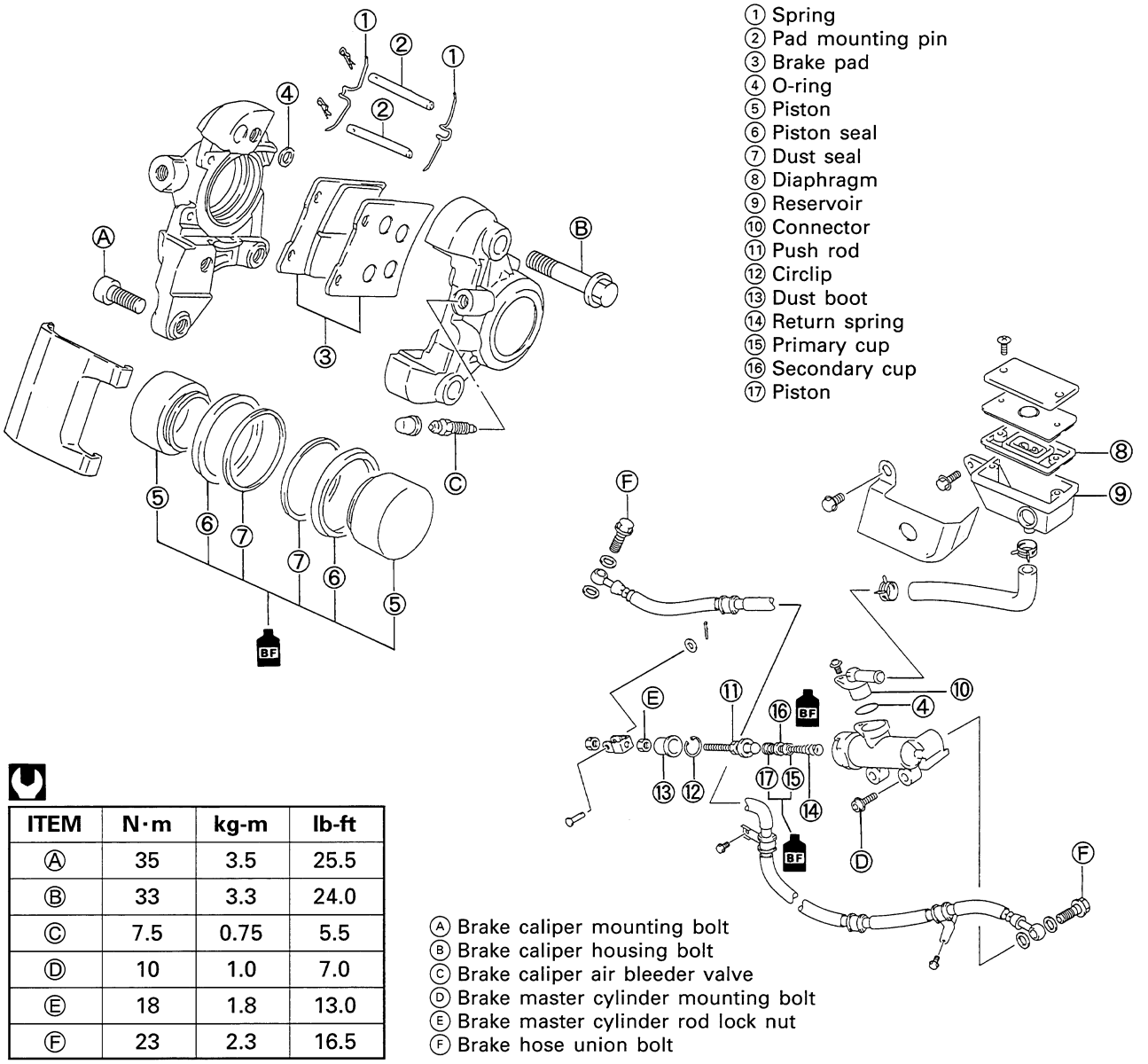


| ITEM | N·m | kg-m | lb-ft |
|---|---|---|---|
| Ⓐ | 35 | 3.5 | 25.5 |
| Ⓑ | 33 | 3.3 | 24.0 |
| Ⓒ | 7.5 | 0.75 | 5.5 |
| Ⓓ | 10 | 1.0 | 7.0 |
| Ⓔ | 18 | 1.8 | 13.0 |
| Ⓕ | 23 | 2.3 | 16.5 |

**⚠ WARNING**

* **This brake system is filled with a ethylene glycol-based DOT 4 brake fluid. Do not use or mix different types of fluid, such as silicone-based or petroleum-based brake fluids.**
* **Do not use any brake fluid taken from old, used or unsealed containers. Never reuse brake fluid left over from the last servicing or which has been stored for long periods of time.**
* **When storing the brake fluid, seal the container completely and keep it away from children.**
* **When replenishing brake fluid, take care not to get dust into fluid.**
* **When washing brake components, use new brake fluid. Never use cleaning solvent.**
* **A contaminated brake disc or brake pad reduces braking performance. Discard contaminated pads and clean the disc with high quality brake cleaner or a neutral detergent.**

**⚠ CAUTION**

**Handle brake fluid with care: the fluid reacts chemically with paint, plastics, rubber materials etc.**

## BRAKE PAD REPLACEMENT

- Remove the brake pad cover.

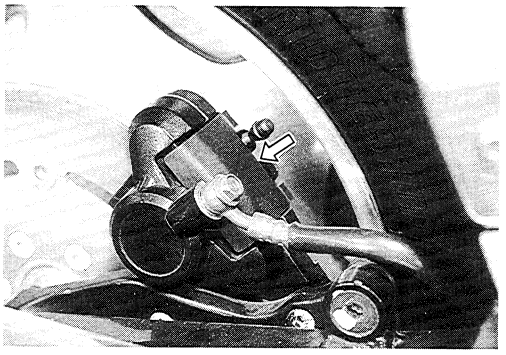

- Remove the brake pads by removing the clips ①, pad mounting pins ② and springs ③.

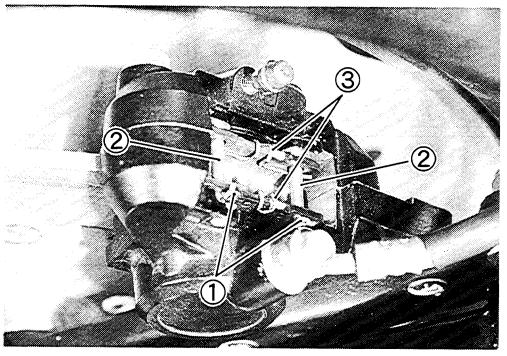


**⚠ CAUTION**

> *** Do not operate the brake pedal during or after brake pad removal.**
> *** Replace the brake pad as a set, otherwise braking performance will be adversely affected.**

- Install the new brake pads.

*NOTE:*
*After replacing the brake pads, pump the brake pedal a few times to check for proper brake operation and then check the brake fluid level.*

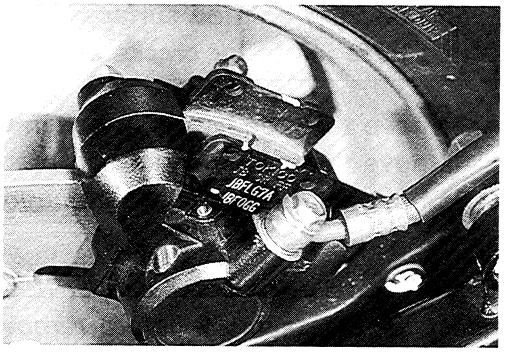

## BRAKE FLUID REPLACEMENT

- Place the motorcycle on a level surface and keep the handlebar straight.
- Remove the master cylinder reservoir cap and diaphragm.
- Suck up the old brake fluid as much as possible.
- Fill the reservoir with fresh brake fluid.

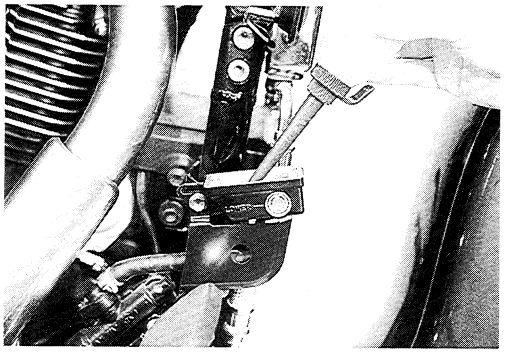

**BF Specification and classification: DOT 4**

- Connect a clear hose ① to the air bleeder valve ② and insert the other end of the hose into a receptacle.
- Loosen the air bleeder valve and pump the brake pedal until the old brake fluid is completely out of the brake system.
- Close the air bleeder valve, and disconnect the clear hose. Fill the reservoir with new brake fluid to the upper end of the inspection window.

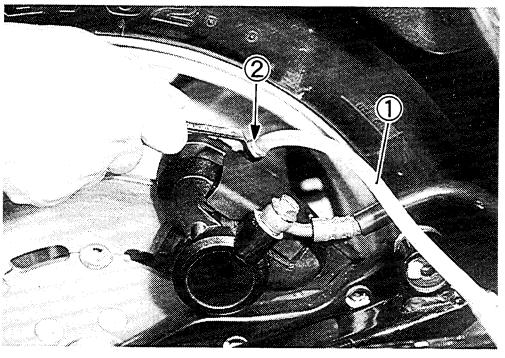


**⚠ CAUTION**

> **Bleed air from the brake system. (See p. 2-13.)**

**Air bleeder valve: 7.5 N·m (0.75 kg-m, 5.5 lb-ft)**

## BRAKE CALIPER REMOVAL AND DISASSEMBLY

- Remove the upper muffler ①. (See p. 3-5.)

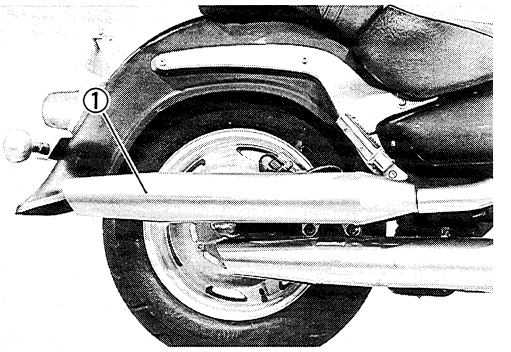


- Remove the brake hose union bolt ② and allow the brake fluid to drain into a suitable receptacle.

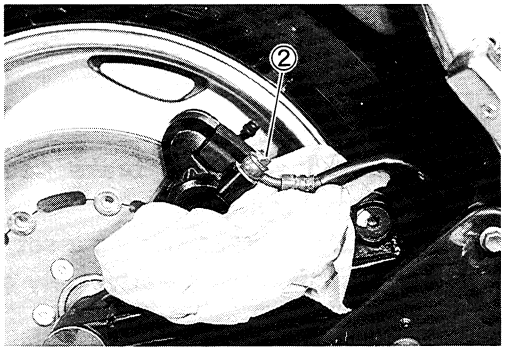


**⚠ CAUTION**

**Never reuse the brake fluid left over from previous servicing and which has been stored for long periods of time.**

**⚠ WARNING**

**Brake fluid, if it leaks, will interfere with safe running and discolor painted surfaces. Check the brake hose and hose joints for cracks and fluid leakage.**

- Remove the axle cap and loosen the axle nut.
- Remove the caliper mounting bracket bolt.
- Remove the brake caliper mounting bolts ③.

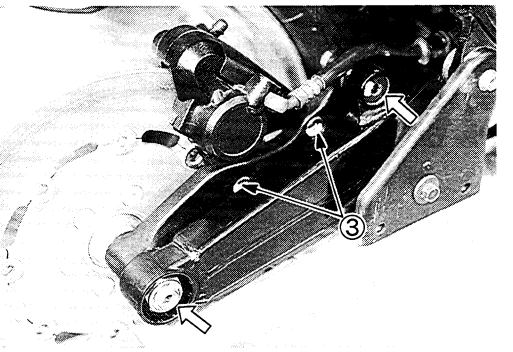


*NOTE:*
*Slightly loosen the brake caliper housing bolts ④ to facilitate later disassembly before removing the brake caliper mounting bolts.*

- Remove the brake pads. (See p. 6-52.)
- Remove the brake caliper housing bolts ④.

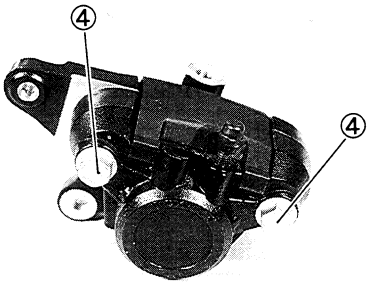


- Separate the brake caliper halves.
- Remove the O-ring ⑤.

**⚠ CAUTION**

**Replace the O-ring with a new one.**

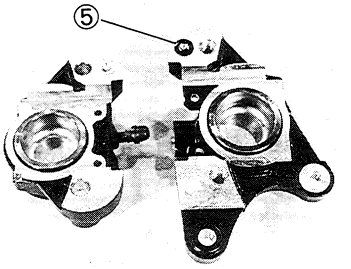

- Place a rag over the brake caliper piston to prevent it from popping out and then force out the piston using compressed air.

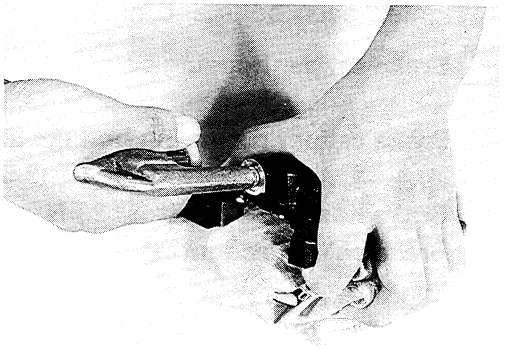

**⚠ CAUTION**

**Do not use high pressure air to prevent brake caliper piston damage.**

- Remove the dust seals and piston seals.

**⚠ CAUTION**

**Do not reuse the dust seals and piston seals to prevent fluid leakage.**

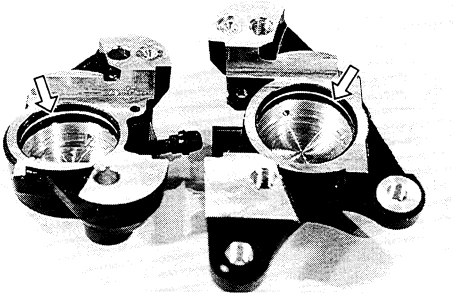

## BRAKE CALIPER INSPECTION

**BRAKE CALIPER** ..... **See p. 6-46.**
**BRAKE CALIPER PISTONS** ..... **See p. 6-46.**
**BRAKE DISC** ..... **See p. 6-47.**

**Service Limit**
**Brake disc thickness (Rear): 6.3 mm (0.25 in)**
**Brake disc runout (Rear): 0.3 mm (0.012 in)**

## BRAKE CALIPER REASSEMBLY AND REMOUNTING

Reassemble and remount the brake caliper in the reverse order of removal and disassembly. Pay attention to the following points:

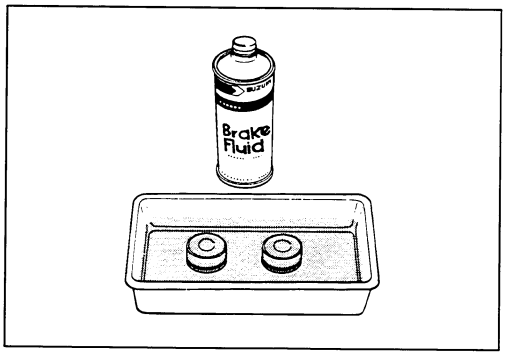


**⚠ CAUTION**

- **Wash the brake caliper components with new brake fluid before reassembly.**
- **Do not wipe the brake fluid off after washing the components.**
- **When washing the components, use the specified brake fluid. Never use different types of fluid or cleaning solvents such as gasoline, kerosine, etc.**
- **Replace the piston seals and dust seals with new ones.**
- **Apply brake fluid to all of the seals, brake caliper bores and pistons before reassembly.**

**BF Specification and classification: DOT 4**

- Tighten each bolts and nut to the specified torque.

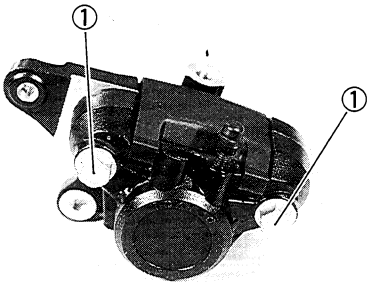


**Brake caliper housing bolt ①: 33 N·m (3.3 kg-m, 24.0 lb-ft)**
**Brake caliper mounting bolt ②: 35 N·m (3.5 kg-m, 25.5 lb-ft)**
**Brake hose union bolt ③: 23 N·m (2.3 kg-m, 16.5 lb-ft)**
**Brake caliper mounting bracket nut ④: 60 N·m (6.0 kg-m, 43.5 lb-ft)**
**Rear axle nut ⑤: 110 N·m (11.0 kg-m, 79.5 lb-ft)**

*NOTE:*
*Before remounting the brake caliper, push the brake caliper pistons all the way into the caliper.*

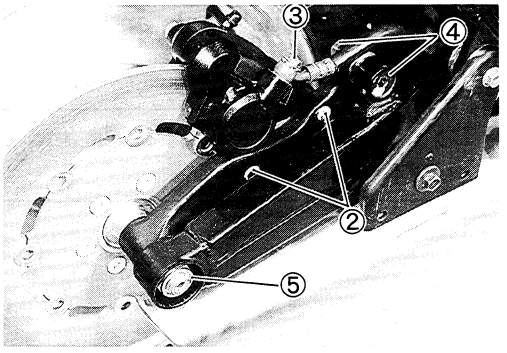


**⚠ CAUTION**

**Bleed air from the system after installing the brake caliper. (See p. 2-13.)**

- Install the muffler. (See p. 3-15.)

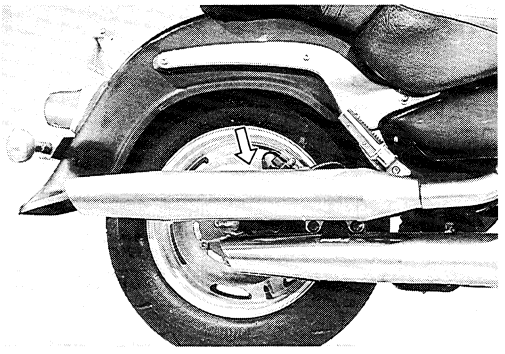

## MASTER CYLINDER REMOVAL AND DISASSEMBLY

- Remove the hose cover ①.
- Remove the master cylinder mounting bolts ②.

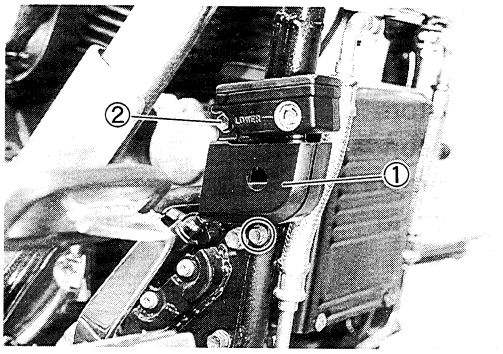


- Remove the pin ③.
- Remove the master cylinder along with the reservoir tank by removing the mounting bolts ④.

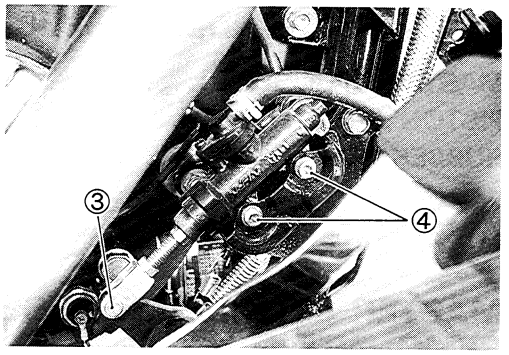


- Place a rag underneath the brake hose union bolt on the master cylinder to catch any spilt brake fluid. Remove the brake hose union bolt ⑤.

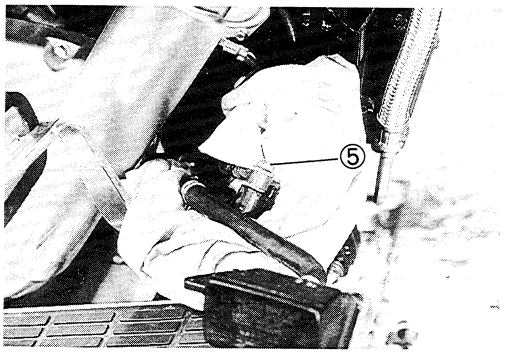


**⚠ CAUTION**

**Immediately wipe off any brake fluid contacting any part of the motorcycle. The brake fluid reacts chemically with paint, plastics and rubber materials, etc., and will damage them severely.**

- Remove the brake hose connector by removing the screw.
- Remove the O-ring ⑥.

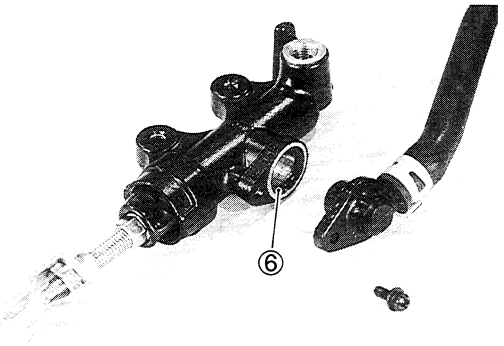


**⚠ CAUTION**

**Replace the O-ring with a new one.**

- Pull the dust boot out and remove the circlip.

**TOOL 09900-06108: Snap ring pliers**

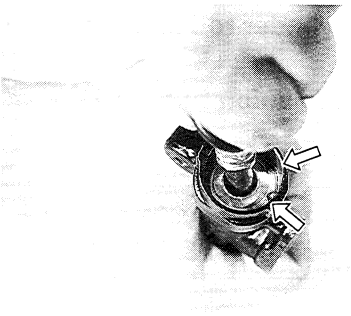

- Remove the push rod, piston/primary cup and spring.

① Push rod
② Piston
③ Secondary cap
④ Primary cap
⑤ Spring

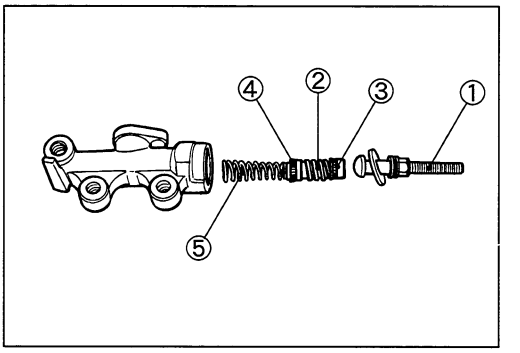


## MASTER CYLINDER INSPECTION

**MASTER CYLINDER** ..... **See p. 6-49.**
**PISTON** ..... **See p. 6-49.**
**RUBBER PARTS** ..... **See p. 6-49.**

## MASTER CYLINDER REASSEMBLY AND REMOUNTING

Reassemble and remount the master cylinder in the reverse order of removal and disassembly. Pay attention to the following points:

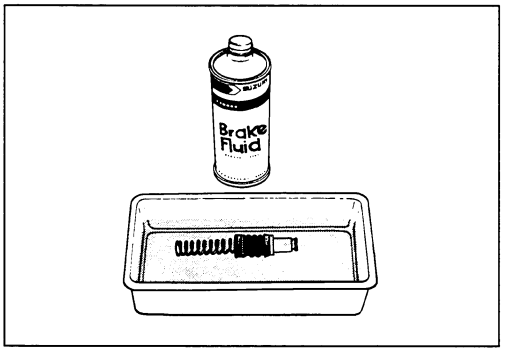


**⚠ CAUTION**

- *** Wash the master cylinder components with new brake fluid before reassembly.**
- *** Do not wipe the brake fluid off after washing the components.**
- *** When washing the components, use the specified brake fluid. Never use different types of fluid or cleaning solvents such as gasoline, kerosine, etc.**
- *** Apply brake fluid to the master cylinder bore and all of the master cylinder components before reassembly.**

**BF Specification and Classification: DOT 4**

- Tighten each bolt to the specified torque.

**Master cylinder mounting bolt ①: 10 N·m (1.0 kg-m, 7.0 lb-ft)**
**Master cylinder rod lock nut ②: 18 N·m (1.8 kg-m, 13.0 lb-ft)**
**Brake hose union bolt ③: 23 N·m (2.3 kg-m, 16.5 lb-ft)**

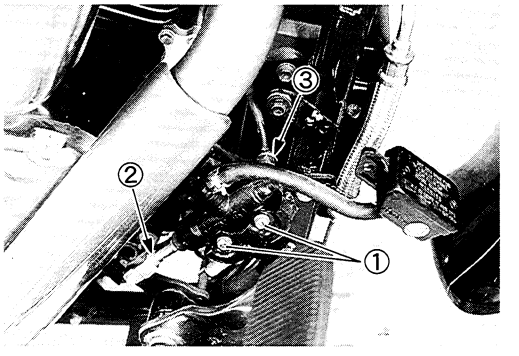


**⚠ CAUTION**

**Bleed air from the system after installing the master cylinder. (See p. 2-13.)**

- Adjust the following item.

| | Page |
|---|---|
| * Brake pedal height | 2-14 |

# CLUTCH RELEASE CYLINDER AND CLUTCH MASTER CYLINDER

## CONSTRUCTION

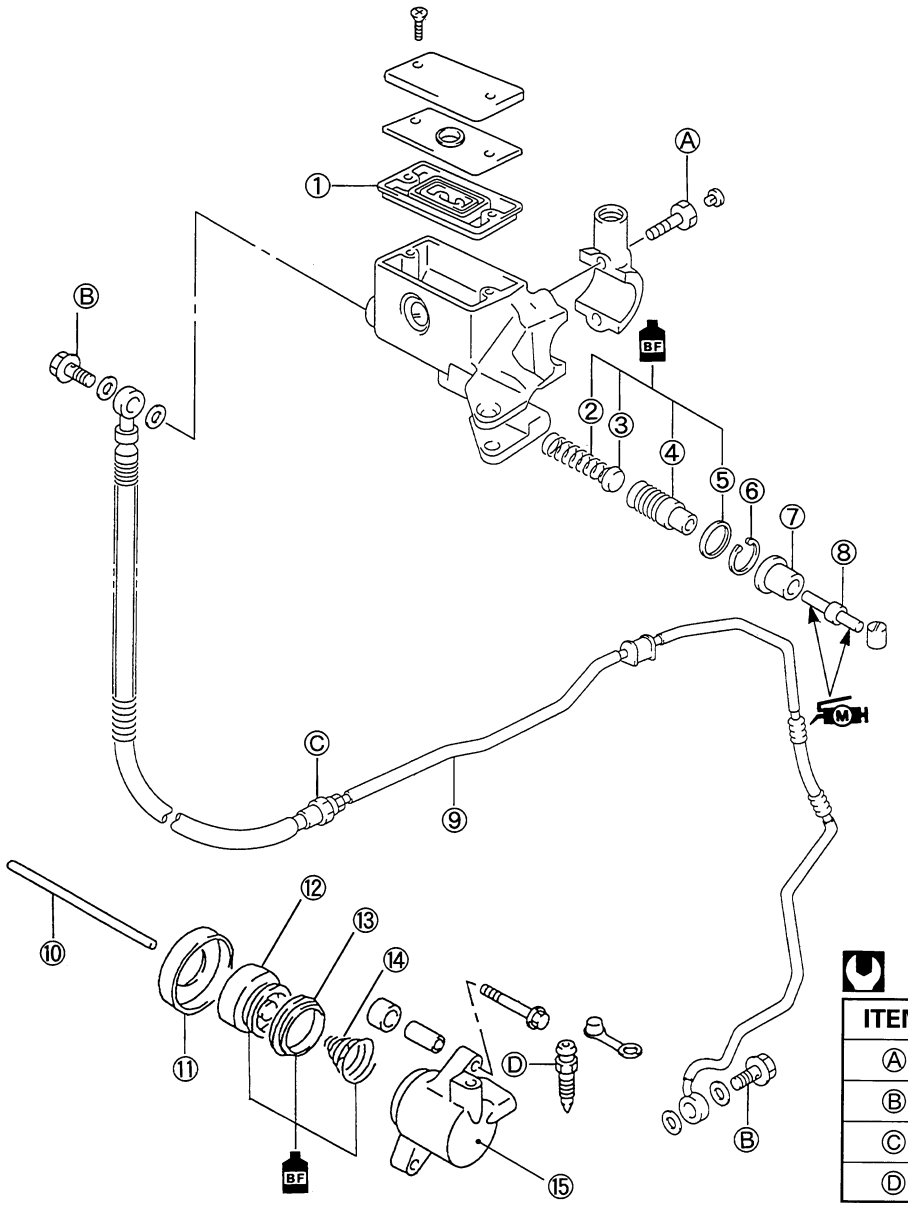


① Diaphragm
② Return spring
③ Primary cup
④ Piston
⑤ Secondary cup
⑥ Circlip
⑦ Dust boot
⑧ Push rod
⑨ Clutch hose
⑩ Push rod
⑪ Retainer
⑫ Piston
⑬ Piston cup
⑭ Return spring
⑮ Clutch release cylinder

Ⓐ Clutch master cylinder mounting bolt
Ⓑ Clutch hose union bolt
Ⓒ Clutch hose flare nut
Ⓓ Air bleeder valve

| ITEM | N·m | kg-m | lb-ft |
|---|---|---|---|
| Ⓐ | 10 | 1.0 | 7.0 |
| Ⓑ | 23 | 2.3 | 16.5 |
| Ⓒ | 14 | 1.4 | 10.0 |
| Ⓓ | 7.5 | 0.75 | 5.5 |

**⚠ WARNING**

* **This clutch system is filled with a ethylene glycol-based DOT 4 brake fluid. Do not use or mix different types of fluid, such as silicone-based or petroleum-based brake fluids.**
* **Do not use any brake fluid taken from old, used or unsealed containers. Never reuse brake fluid left over from the last servicing or which has been stored for long periods of time.**
* **When storing brake fluid, seal the container completely and keep it away from children.**
* **When replenishing brake fluid, take care not to get dust into fluid.**
* **When washing clutch components, use fresh brake fluid. Never use cleaning solvent.**

**⚠ CAUTION**

**Handle brake fluid with care: the fluid reacts chemically with paint, plastics, rubber materials etc.**

## CLUTCH FLUID REPLACEMENT

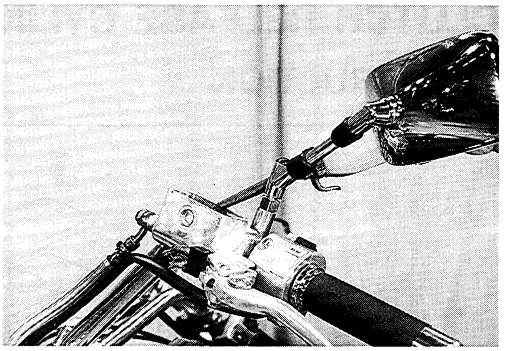

- Place the motorcycle on a level surface and keep the handlebars straight.
- Remove the clutch master cylinder reservoir cap and diaphragm.
- Suck up the old brake fluid as much as possible.
- Fill the reservoir with new brake fluid.

**Specification and classification: DOT 4**

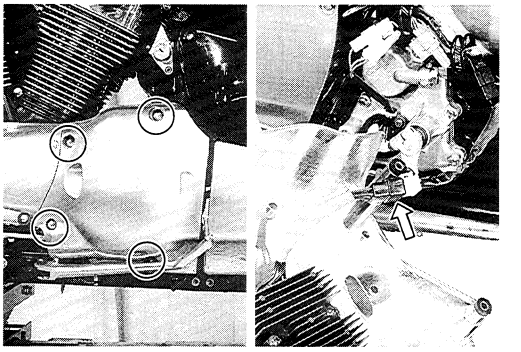

- Remove the secondary bevel gear case cover bolts.
- Disconnect the regulator/rectifier lead wire coupler and remove the secondary bevel gear case cover.

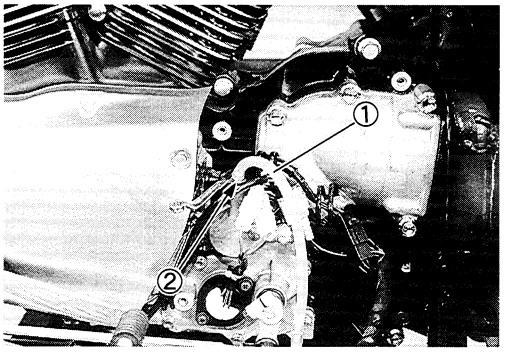


- Connect a clear hose ① to the air bleeder valve ② and insert the other end of hose into a receptacle.
- Loosen the air bleeder valve and pump the clutch lever until the old brake fluid is completely out of the clutch system.
- Close the air bleeder valve and disconnect the clear hose. Fill the reservoir with new brake fluid to the upper end of the inspection window.

**⚠ CAUTION**

**Bleed air from the clutch system. (See p. 2-11.)**

**Air bleeder valve: 7.5 N·m (0.75 kg-m, 5.5 lb-ft)**

## CLUTCH RELEASE CYLINDER REMOVAL AND DISASSEMBLY

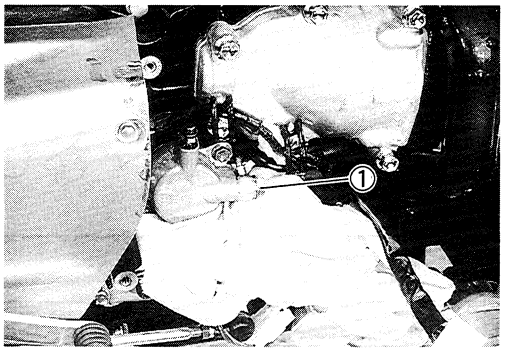


- Remove the secondary bevel gear case cover bolts.
- Disconnect the regulator/rectifier lead wire coupler and remove the secondary bevel gear case cover.
- Disconnect the clutch hose from the clutch release cylinder by removing the clutch hose union bolt ① and allow the brake fluid to drain into a suitable receptacle.

**⚠ CAUTION**

**Never reuse the brake fluid left over from previous servicing and which has been stored for long periods of time.**

**⚠ WARNING**

**Brake fluid, if it leaks, will interfere with safe running and discolor painted surfaces. Check the clutch hose, pipe and hose joints for cracks and fluid leakage.**

- Remove the clutch release cylinder by removing its mounting bolts, spacers and dowel pins.

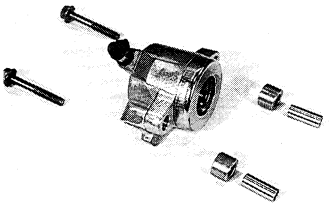

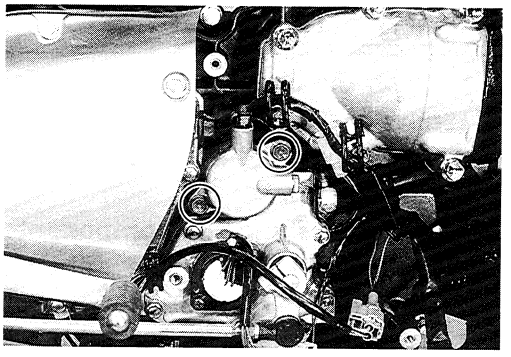

- Remove the retainer ①, piston ②, piston cup ③ and spring ④.

**⚠ CAUTION**

**Do not reuse the piston cup to prevent fluid leakage.**

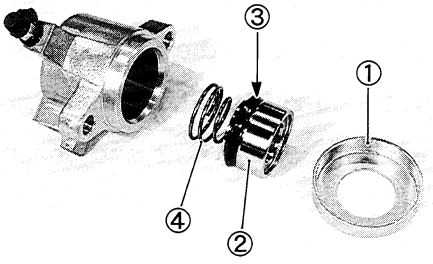


## CLUTCH RELEASE CYLINDER INSPECTION

### CLUTCH RELEASE CYLINDER

Inspect clutch release cylinder wall for nicks, scratches or other damage.

### CLUTCH RELEASE PISTONS

Inspect the clutch release piston for any scratches or other damage.

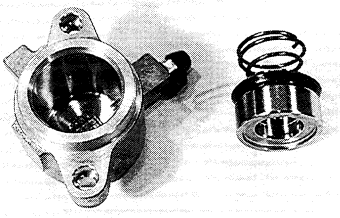

## CLUTCH RELEASE CYLINDER REASSEMBLY AND REMOUNTING

Reassemble and remount the clutch release cylinder in the reverse order of removal and disassembly. Pay attention to the following points:

- Wash the clutch release cylinder bores and pistons with specified brake fluid. Thoroughly wash piston cup grooves.

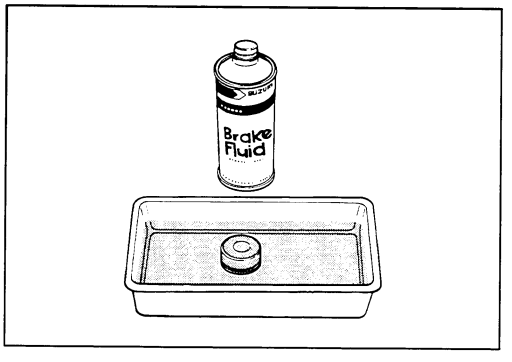


**BF Specification and classification: DOT 4**

**⚠ CAUTION**

* **Wash the clutch release cylinder components with new brake fluid before reassembly.**
* **Do not wipe the brake fluid off after washing the components.**
* **When washing the components, use the specified brake fluid. Never use different types of fluid or cleaning solvents such as gasoline, kerosine, etc.**
* **Replace the piston cup with a new one.**
* **Apply brake fluid to the seals, clutch release cylinder bore and piston before reassembly.**

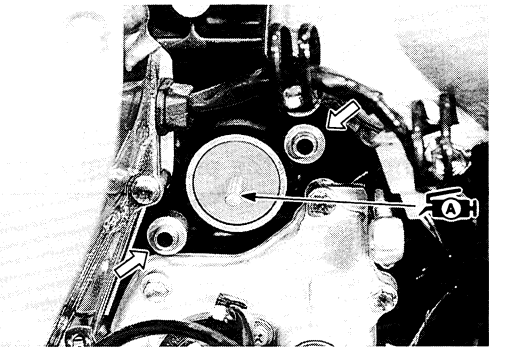

- Apply grease to the clutch push rod retaining hole.

**99000-25010: SUZUKI SUPER GREASE "A"**

- Install the dowel pins and spacers.

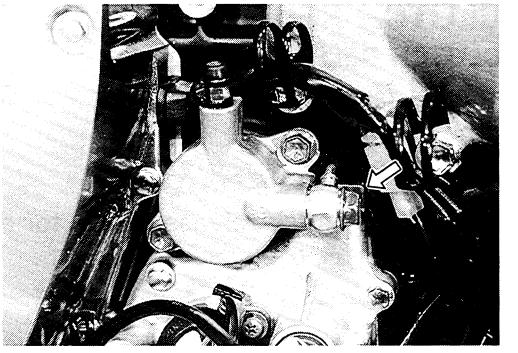

- Tighten the clutch release cylinder mounting bolts and clutch hose union bolt to the specified torque.

**Clutch hose union bolt: 23 N·m (2.3 kg-m, 16.5 lb-ft)**

*NOTE:*
*Before remounting the clutch release cylinder, push the piston all the way into the cylinder.*

**⚠ CAUTION**

**Bleed air from the system after installing the clutch release cylinder. (See p. 2-11.)**

## CLUTCH MASTER CYLINDER REMOVAL AND DISASSEMBLY

- Disconnect the clutch lever position switch lead wires ①.
- Remove the rear view mirror.

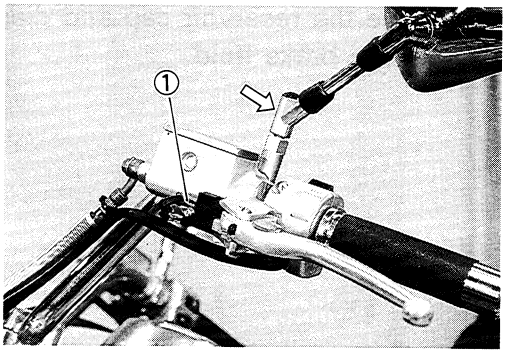


- Place a rag underneath the clutch hose union bolt on the clutch master cylinder to catch any spilt brake fluid. Remove the clutch hose union bolt and disconnect the clutch hose.

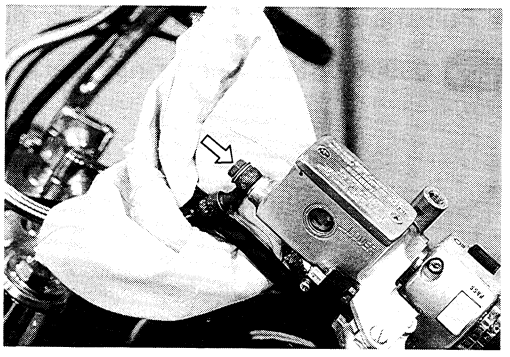

**⚠ CAUTION**

**Immediately wipe off any brake fluid contacting any part of the motorcycle. The brake fluid reacts chemically with paint, plastics and rubber materials, etc., and will damage them severely.**

- Remove the bolt caps.
- Remove the clutch master cylinder assembly by removing its mounting bolts.

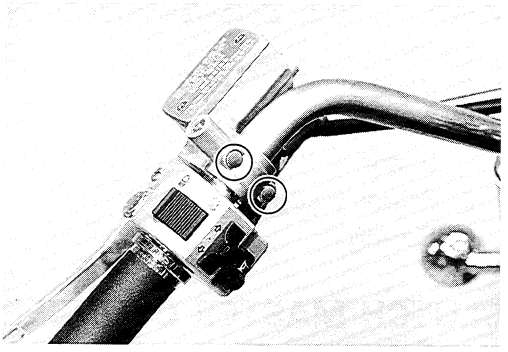

- Remove the clutch lever ② and clutch lever position switch ③.

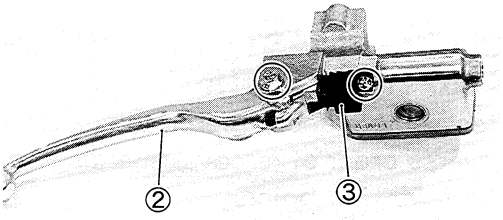


- Remove the push rod ④ and bush ⑤.

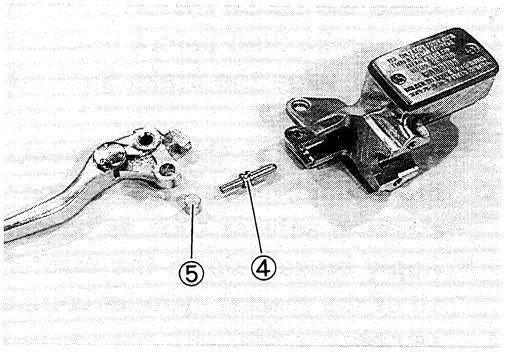

- Remove the reservoir cap and diaphragm.
- Drain the brake fluid.

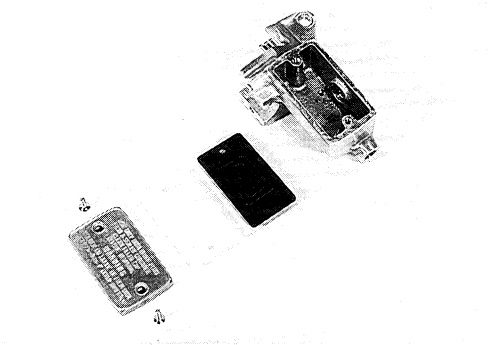

- Pull the dust boot ③ out and remove the circlip ④.

**TOOL 09900-06108: Snap ring pliers**

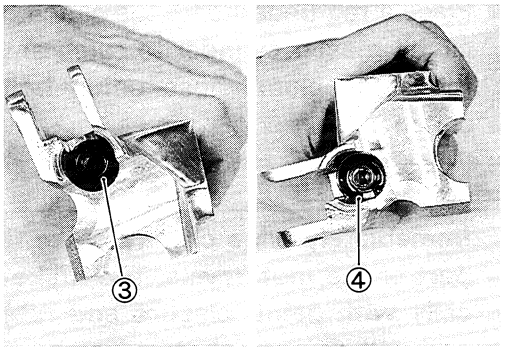


- Remove the piston/secondary cup, primary cup and spring.
  ⑤ Washer
  ⑥ Secondary cup
  ⑦ Piston
  ⑧ Primary cup
  ⑨ Spring

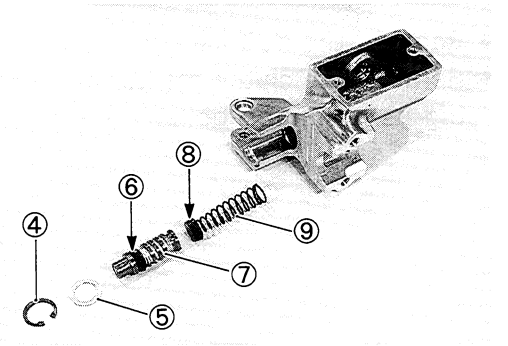


## CLUTCH MASTER CYLINDER INSPECTION

**MASTER CYLINDER ..... See p. 6-49.**
**PISTON ..... See p. 6-49.**
**RUBBER PARTS ..... See p. 6-49.**

## CLUTCH MASTER CYLINDER REASSEMBLY AND REMOUNTING

Reassemble and remount the clutch master cylinder in the reverse order of removal and disassembly. Pay attention to the following points:

**⚠ CAUTION**

- **Wash the clutch master cylinder components with new brake fluid before reassembly.**
- **Do not wipe the brake fluid off after washing the components.**
- **When washing the components, use the specified brake fluid. Never use different types of fluid or cleaning solvent such as gasoline, kerosine, etc.**
- **Apply brake fluid to the master cylinder bore and all of the master cylinder components before reassembly.**

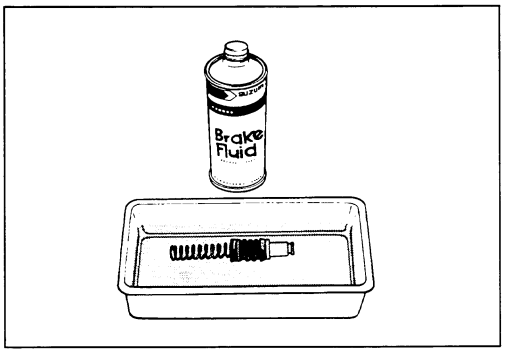


**BF Specification and classification: DOT 4**

- Before reassemble the clutch lever, apply SUZUKI MOLY PASTE to both ends of the push rod.

**99000-25140: SUZUKI MOLY PASTE**

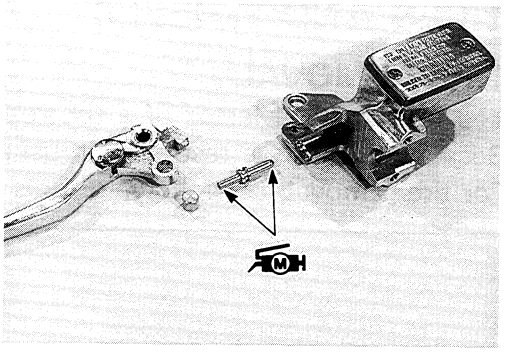

- When installing the clutch lever position switch, align the projection on the switch with the hole in the clutch master cylinder.

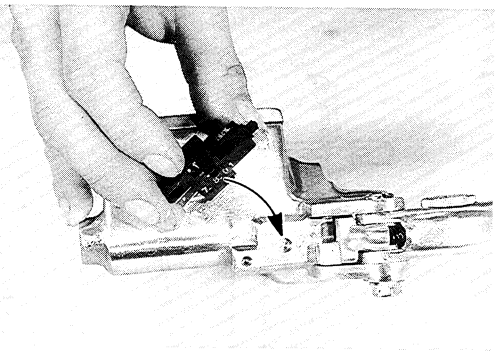

- When remounting the clutch master cylinder onto the handlebars, align the clutch master cylinder holder's mating surface Ⓐ with the punch mark Ⓑ on the handlebars and tighten the upper clamp bolt first.

**Clutch master cylinder clamp bolt (upper and lower): 10 N·m (1.0 kg-m, 7.0 lb-ft)**

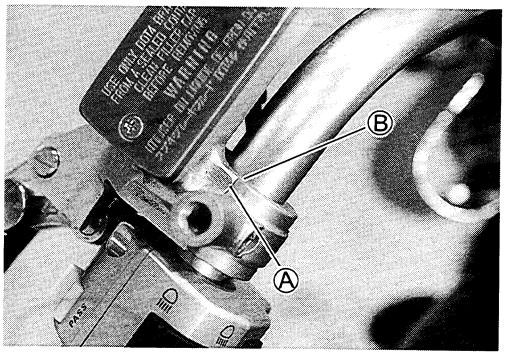


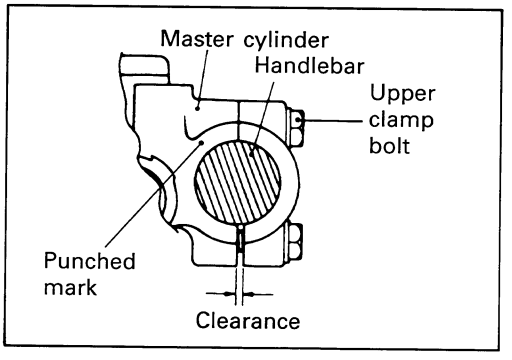


- Tighten the clutch hose union bolt to the specified torque.

**Clutch hose union bolt: 23 N·m (2.3 kg-m, 16.5 lb-ft)**

**⚠ CAUTION**

**Bleed air from the clutch system after installing the clutch master cylinder. (See p. 2-11.)**

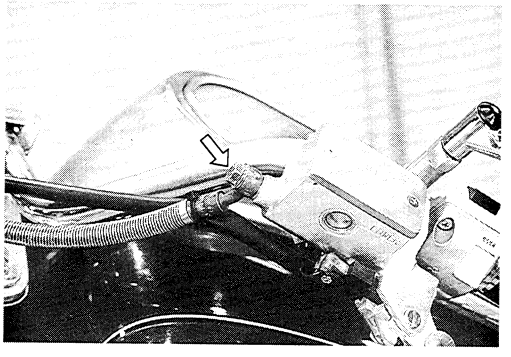

# TIRES AND WHEELS

## TIRE REMOVAL

The most critical factor of a tubeless tire is the seal between the wheel rim and the tire bead. Because of this, we recommend using a tire changer which is also more efficient than tire levers. For tire removal, the following tools are required.

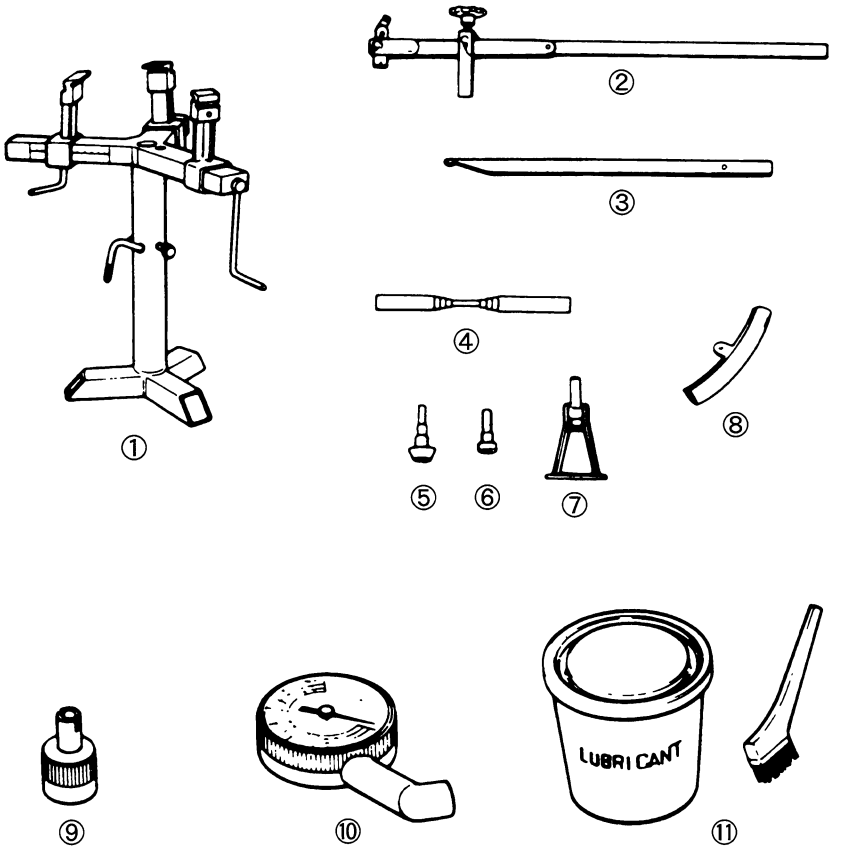


① Tire changer stand
② Operation arm
③ Tire lever
④ Center shaft
⑤ Bead pushing roller
⑥ Rim guide roller
⑦ Bead breaker
⑧ Rim protector
⑨ Core remover
⑩ Air pressure gauge
⑪ Tire lubricant

- Remove the valve core from the valve stem, and deflate the tire completely.

*NOTE:*
*Mark the tire with chalk to note the position Ⓐ of the tire on the rim and rotational direction Ⓑ of the tire.*

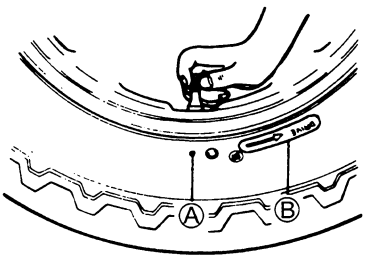

- Place the center shaft ① to the wheel, and fix the wheel using the rim holder ②.

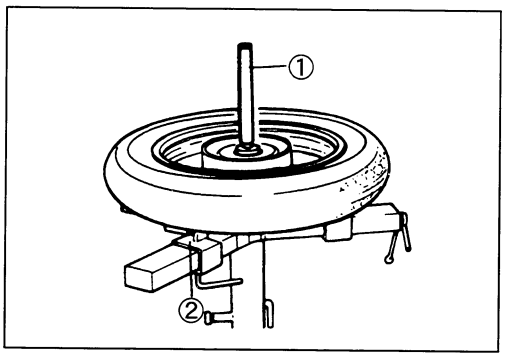


- Attach the operation arm ③ to the center shaft.

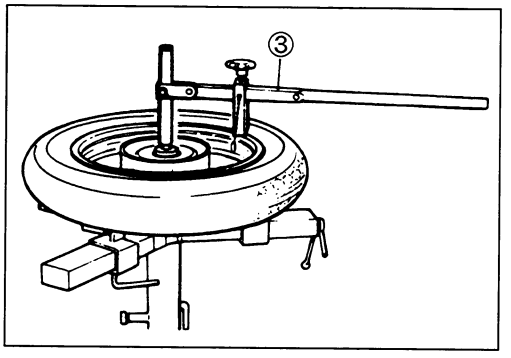


- Attach the bead breaker ④ to the operation arm, and dismount the bead from the rim. Turn the wheel over and dismount the other bead from the rim.

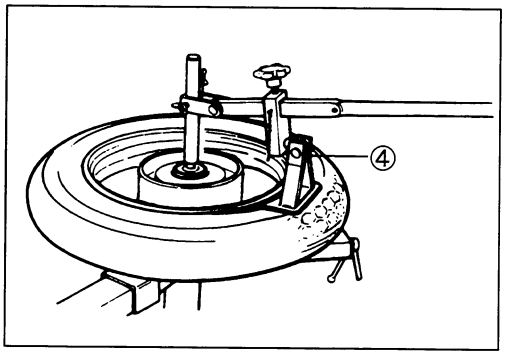


- Install the rim guide roller ⑤.
- Install the rim protector ⑥, and raise the bead using the tire lever ⑦.

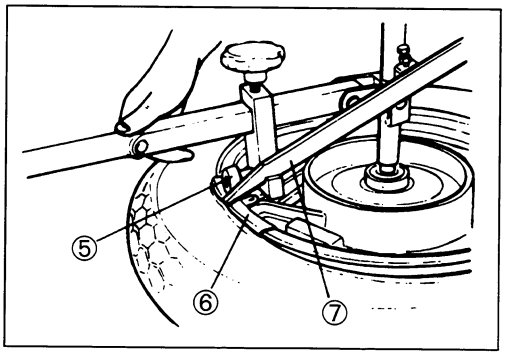


- Set the tire lever against the operation arm, and rotate the lever around the rim. Repeat this procedure to remove the other bead from the rim.

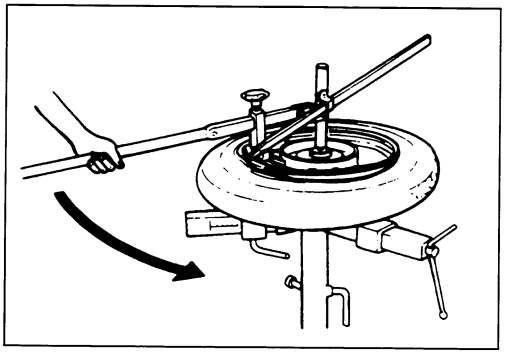

# INSPECTION

## WHEELS

Wipe off any rubber substance or rust from the wheel, and inspect the wheel rim. If any one of the following items are observed, replace the wheel with a new one.

* A distortion or crack.
* Any scratches or flaws in the bead seating area.
* Wheel runout (axial & radial) of more than 2.0 mm (0.08 in).

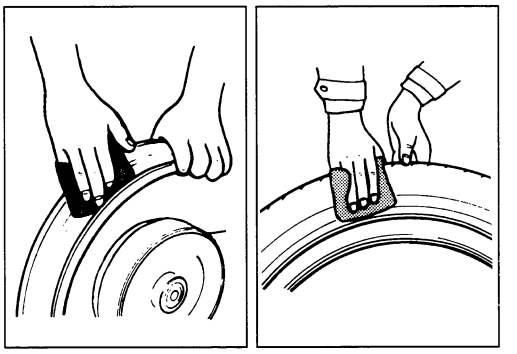

**Service Limit**

**Wheel rim runout (axial and radial): 2.0 mm (0.08 in)**

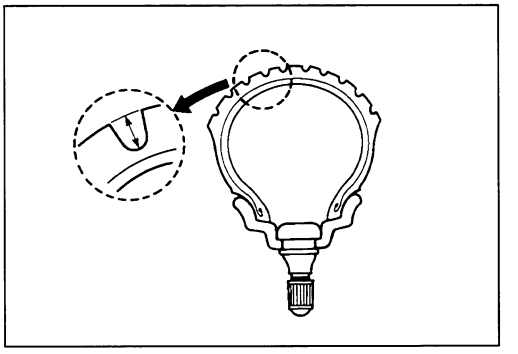

## TIRES

Thoroughly inspect the removed tire, and if any one of the following items are observed, replace the tire with a new one; do not repair it.

* A puncture or a split whose total length or diameter exceeds 6.0 mm (0.24 in).
* A scratch or split on the side wall.
* Tread depth less than 1.6 mm (0.06 in) in the front tire and less than 2.0 mm (0.08 in) on the rear tire.

**TOOL 09900-20805: Tire depth gauge**

**Service Limit**

**Tire tread depth limit (Front): 1.6 mm (0.06 in)**
**(Rear) : 2.0 mm (0.08 in)**

* Ply separation.
* Tread separation.
* Tread wear is extraordinarily deformed or distributed around the tire.
* Scratches at the bead.
* Cord is cut.
* Damage from skidding (flat spots).
* Abnormality in the inner liner.

*NOTE:*
*When repairing a flat tire, follow the repair instructions and use only recommended repairing materials.*

## VALVE INSPECTION

Inspect the valve ① after the tire is removed from the rim, and replace the valve with a new one if the seal rubber has any splits or scratches.

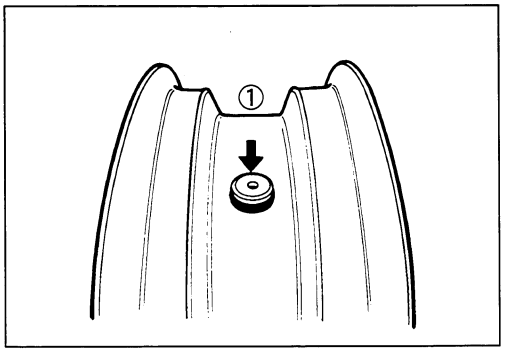


Inspect the removed valve core and replace it with a new one if the seal ② is abnormally deformed or worn.

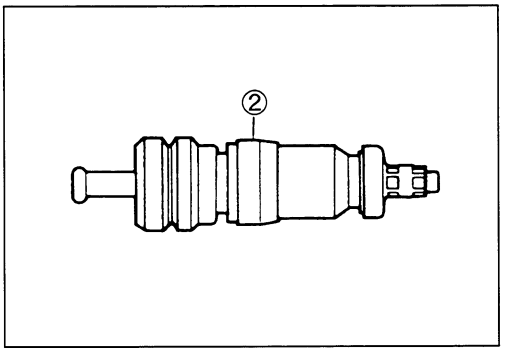

### VALVE INSTALLATION

Clean any dust or rust which is around the valve hole ① and then install the valve in the rim.

*NOTE:*
*To properly install the valve ② into the valve hole, apply a special tire lubricant or neutral soapy liquid to the valve.*

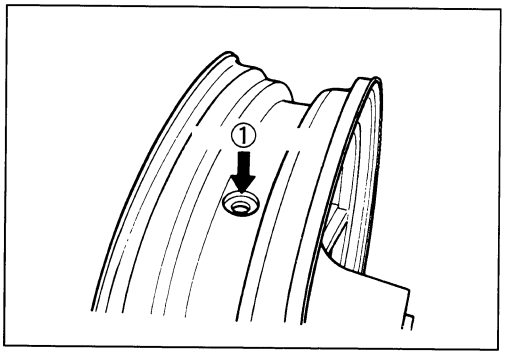


**⚠ CAUTION**

**Be careful not to damage the valve lip Ⓐ.**

Ⓑ Wheel

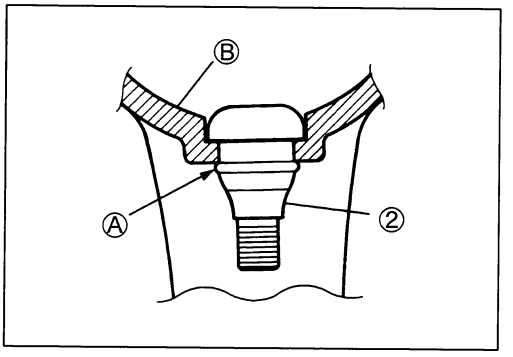


## TIRE INSTALLATION

- Apply a special tire lubricant or neutral soapy liquid to the tire bead.

**⚠ CAUTION**

**Never apply grease, oil or gasoline to the tire bead.**

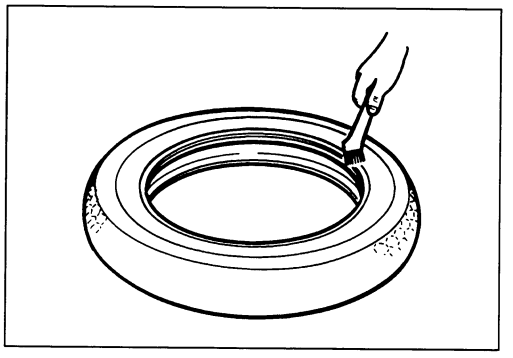

- When installing the tire, make sure that the arrow Ⓐ faces the direction of wheel rotation and align the balancing mark Ⓑ of the tire with the valve ① as shown.

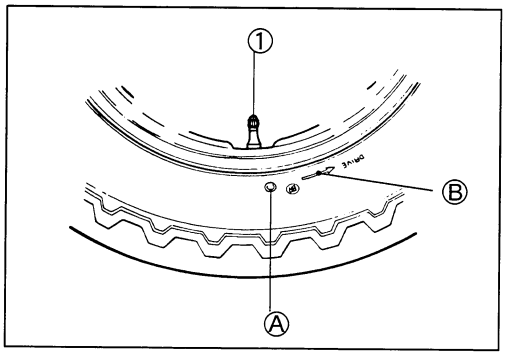


- Set the bead pushing roller ②.
- Rotate the operation arm around the rim to seat the tire bead completely. Seat the bottom bead first, then the upper bead.
- Remove the wheel from the tire changer, and install the valve core in the valve stem.

*NOTE:*
*Before installing the valve core, inspect it.*

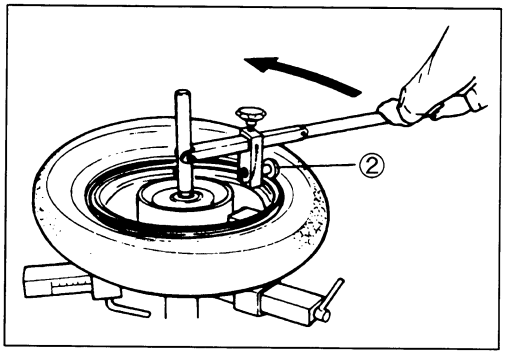

- Bounce the tire several times while rotating it. This will allow the tire bead to expand outwards, making inflation easier.

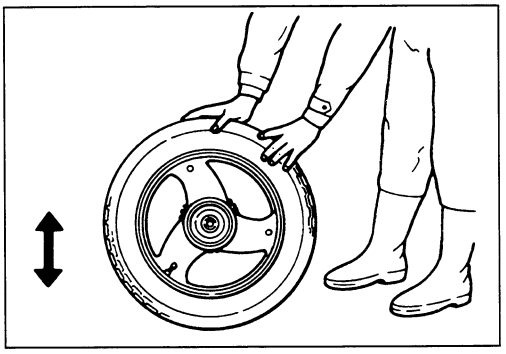

*NOTE:*
*Before inflating the tire, make sure that the balance mark is aligned with the valve stem.*

- After tire is properly seated to the wheel rim, inflate the tire to the recommended pressure. Correct the wheel balance if necessary.

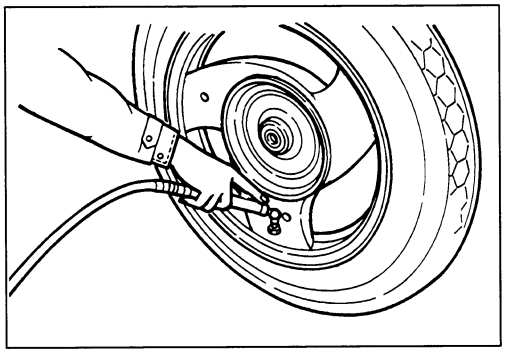

**⚠ WARNING**

**Do not inflate the tire to more than 400 kPa (4.0 kg/cm$^2$, 56 psi). The tire could burst with sufficient force to cause severe injury. Never stand directly over the tire while inflating it.**

*NOTE:*
*Check the "rim line Ⓐ" cast on the tire side walls. It must be equidistant from the wheel rim all the way around. If the distance between the rim line and wheel rim varies, this indicates that the bead is not properly seated. If this is so, deflate the tire completely, and unseat the bead on both sides. Then, coat the bead with lubricant, and re-seat the tire.*

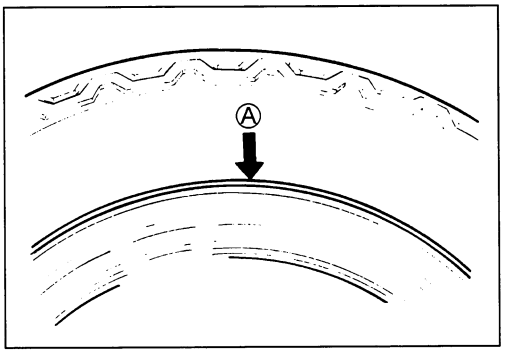


**⚠ WARNING**

- **Do not run a repaired tire more than 50 km/h (30 mph) within 24 hours after repairing a tire, since the patch may not be completely cured.**
- **Do not exceed 130 km/h (80 mph) with a repaired tire.**

**TIRE PRESSURE**

| COLD INFLATION TIRE PRESSURE | SOLO RIDING | | | DUAL RIDING | | |
|---|---|---|---|---|---|---|
| | kPa | kgf/cm$^2$ | psi | kPa | kgf/cm$^2$ | psi |
| FRONT | 200 | 2.00 | 29 | 200 | 2.00 | 29 |
| REAR | 250 | 2.50 | 36 | 250 | 2.50 | 36 |

# ELECTRICAL SYSTEM

CONTENTS


CAUTIONS IN SERVICING ..... 7- 1
LOCATION OF ELECTRICAL COMPONENTS ..... 7- 3
CHARGING SYSTEM ..... 7- 5
DESCRIPTION ..... 7- 5
TROUBLESHOOTING ..... 7- 7
INSPECTION ..... 7- 8
AUTOMATIC DE-COMPRESSION SYSTEM, STARTER SYSTEM AND SIDE-STAND/IGNITION INTERLOCK SYSTEM ..... 7-10
AUTOMATIC DE-COMPRESSION SYSTEM, STARTER SYSTEM DESCRIPTION ..... 7-10
SIDE-STAND/IGNITION INTERLOCK SYSTEM DESCRIPTION ..... 7-11
TROUBLESHOOTING ..... 7-12
STARTER MOTOR REMOVAL AND DISASSEMBLY ..... 7-14
STARTER MOTOR INSPECTION ..... 7-15
STARTER MOTOR REASSEMBLY AND INSTALLATION ..... 7-16
STARTER RELAY INSPECTION ..... 7-17
SIDE-STAND/IGNITION INTERLOCK SYSTEM PART INSPECTION ..... 7-18
AUTOMATIC DE-COMPRESSION RELAY INSPECTION ..... 7-20
AUTOMATIC DE-COMPRESSION SOLENOID INSPECTION ..... 7-21
IGNITION SYSTEM (DIGITAL IGNITOR) ..... 7-22
DESCRIPTION ..... 7-22
TROUBLESHOOTING ..... 7-23
INSPECTION ..... 7-24
SPEEDOMETER ..... 7-29
REMOVAL ..... 7-29
INSPECTION ..... 7-29
RELAYS ..... 7-32
STARTER RELAY ..... 7-32
AUTOMATIC DE-COMPRESSION RELAY ..... 7-32
TURN SIGNAL/SIDE-STAND RELAY ..... 7-32
LAMPS ..... 7-33
HEADLIGHT ..... 7-33
BRAKE LIGHT/TAILLIGHT ..... 7-34
TURN SIGNAL LIGHTS ..... 7-34
SWITCHES ..... 7-35
BATTERY ..... 7-36
SPECIFICATIONS ..... 7-36
INITIAL CHARGING ..... 7-36
SERVICING ..... 7-37
RECHARGING OPERATION ..... 7-38

# CAUTIONS IN SERVICING

## CONNECTOR

- When disconnecting a connector, be sure to hold the terminals; do not pull the lead wires.
- When connecting a connector, push it in so it is firmly attached.
- Inspect the connector for corrosion, contamination and any breakage in the cover.

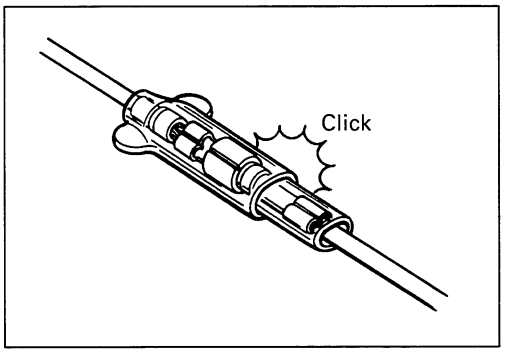


## COUPLER

- With a lock-type coupler, be sure to release the lock before disconnecting it. When connecting a coupler, push it in until the lock clicks shut.
- When disconnecting a coupler, be sure to hold the coupler; do not pull the lead wires.
- Inspect each terminal on the coupler for looseness or bends.
- Inspect each terminal for corrosion and contamination.

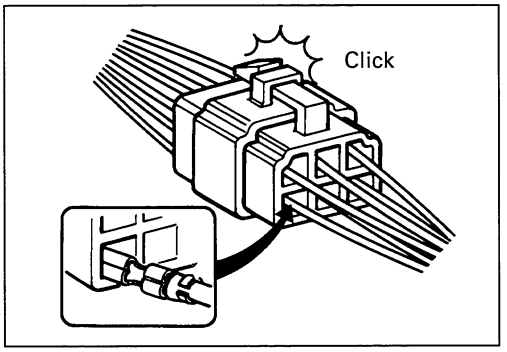


## CLAMPS

- Refer to "WIRE, CABLE AND HOSE ROUTING" (See pp. 8-12 to -18.) for proper clamping procedures.
- Bend the clamp properly as shown in the illustration.
- When clamping the wire harness, do not allow it to hang down.
- Do not use wire or any other substitute for the band-type clamp.

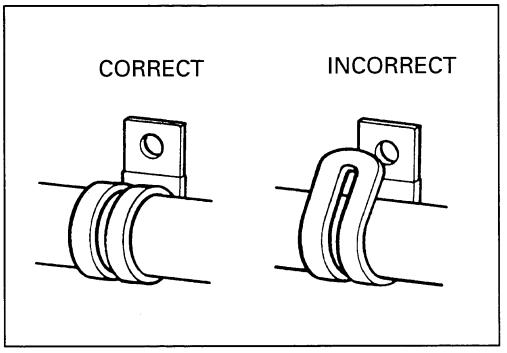


## FUSE

- When a fuse blows, always investigate the cause, correct the problem and then replace the fuse.
- Do not use a fuse of a different capacity.
- Do not use any substitutes for the fuse (e.g., wire).

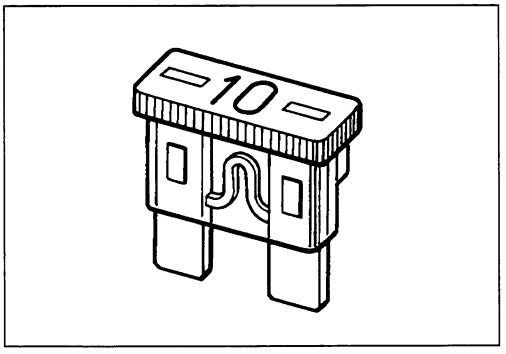


## SEMI-CONDUCTOR EQUIPPED PARTS

- Do not drop any part that contains a semi-conductor (e.g., ignitor, regulator/rectifier).
- When inspecting the part, follow the inspection instructions carefully. Neglecting proper procedures may cause this part to be damaged.

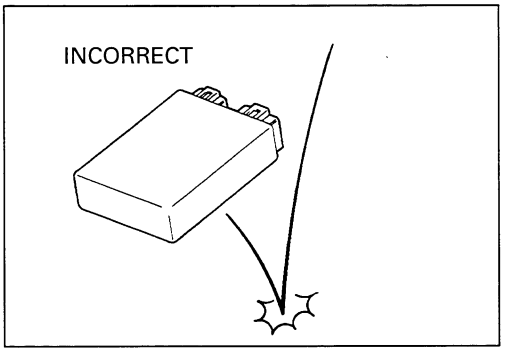

## BATTERY

- The MF battery used in this motorcycle does not require maintenance (e.g., electrolyte level inspection, distilled water replenishing).
- During normal charging, no hydrogen gas is produced. However, if the battery is overcharged, hydrogen gas gas may be produced. Therefore, be sure that there are no fire or spark sources nearby (e.g., short-circuit) when charging the battery.
- Be sure to recharge the battery in a well-ventilated and open area.
- Note that the charging system for the MF battery is different from that of a conventional battery. Do not replace the MF battery with a conventional battery.

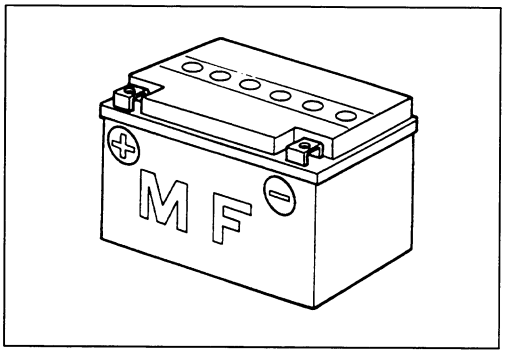


## CONNECTING BATTERY

- When disconnecting terminals from the battery for disassembly or servicing, be sure to disconnect the negative (⊖) terminal first.
- When connecting terminals to the battery, be sure to connect the positive (⊕) terminal first.
- If the terminal is found corroded, remove the battery, pour warm water over it and clean with a wire brush.
- Upon completion of connection, apply grease lightly.
- Put a cover over the positive (⊕) terminal.

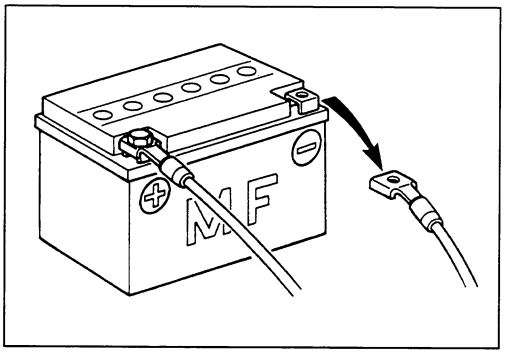


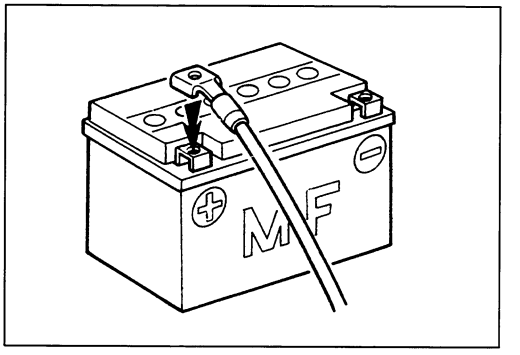


## WIRING PROCEDURE

- Route the wire harness properly according to "WIRE HARNESS ROUTING" (See pp. 8-12 to -18.).

## USING MULTI CIRCUIT TESTER

- Be sure to use positive (⊕) and negative (⊖) probes of the tester properly. Their false use may cause damage in the tester.
- If the current values are not known, start measuring in the higher range.
- Taking a measurement where voltage is applied in the resistance range may cause damage in the tester. When measuring resistance, check to make sure that no voltage is applied there.
- After using the tester, turn the switch to the OFF position.

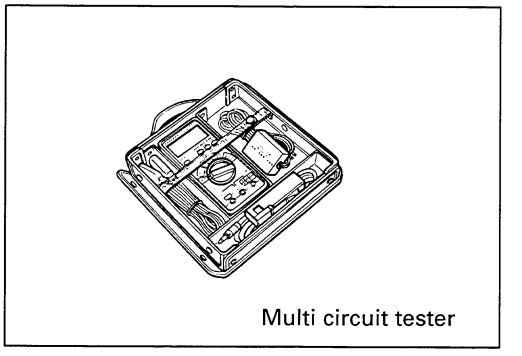
Multi circuit tester

**⚠ CAUTION**

**Before using the multi circuit tester, read the instruction manual.**

# LOCATION OF ELECTRICAL COMPONENTS

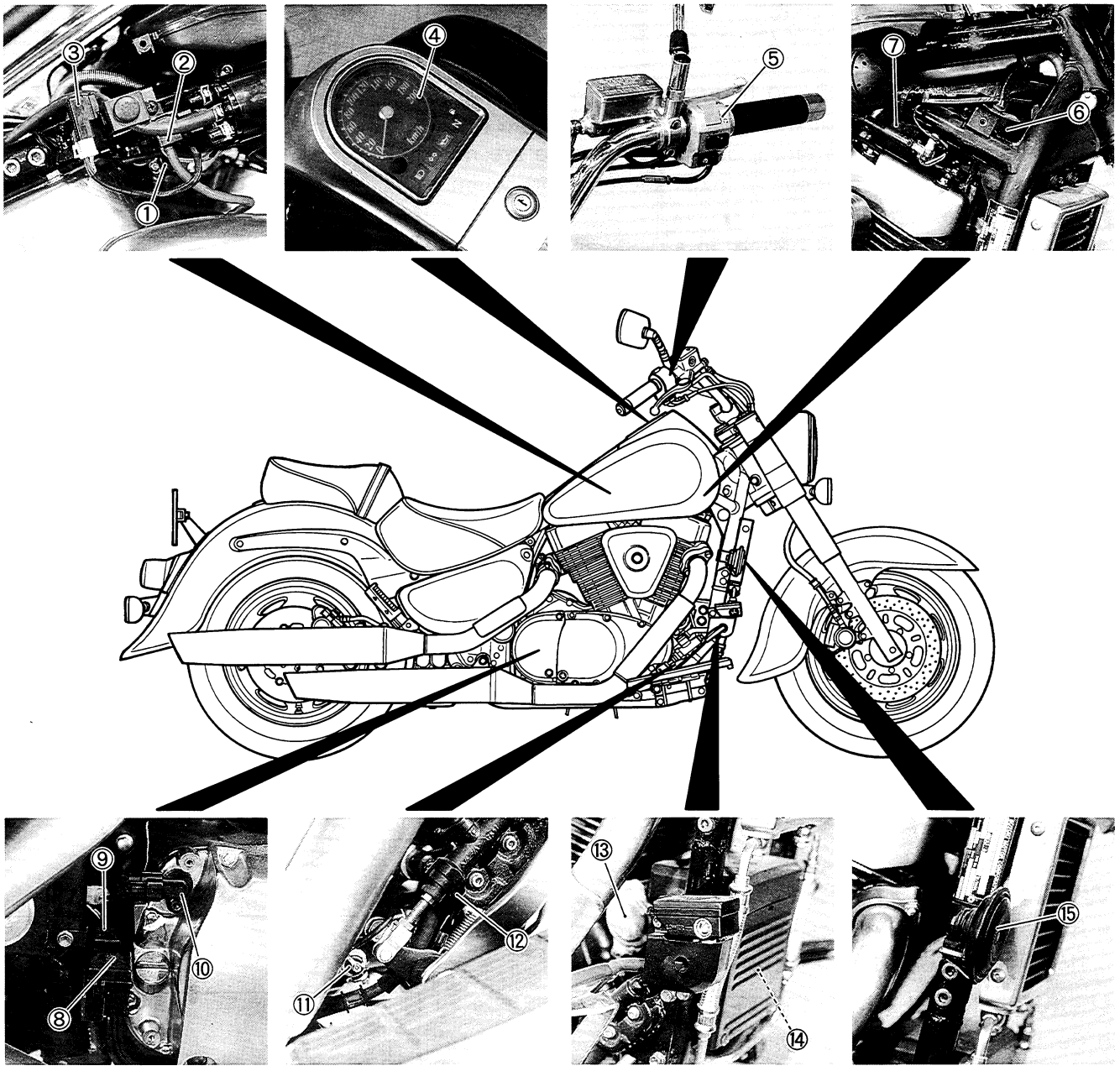


①Throttle position sensor
②MAP sensor
③Automatic de-compression relay
④Speedometer
⑤Handlebar switch (R)
⑥Automatic de-compression solenoid
⑦Ignition coil (#2)
⑧Fuse box
⑨Turn signal/side-stand relay
⑩Speed sensor
⑪Oil pressure switch
⑫Rear brake light switch
⑬Starter motor
⑭Battery
⑮Horn (Except for E-03, -24, -28 and -33)

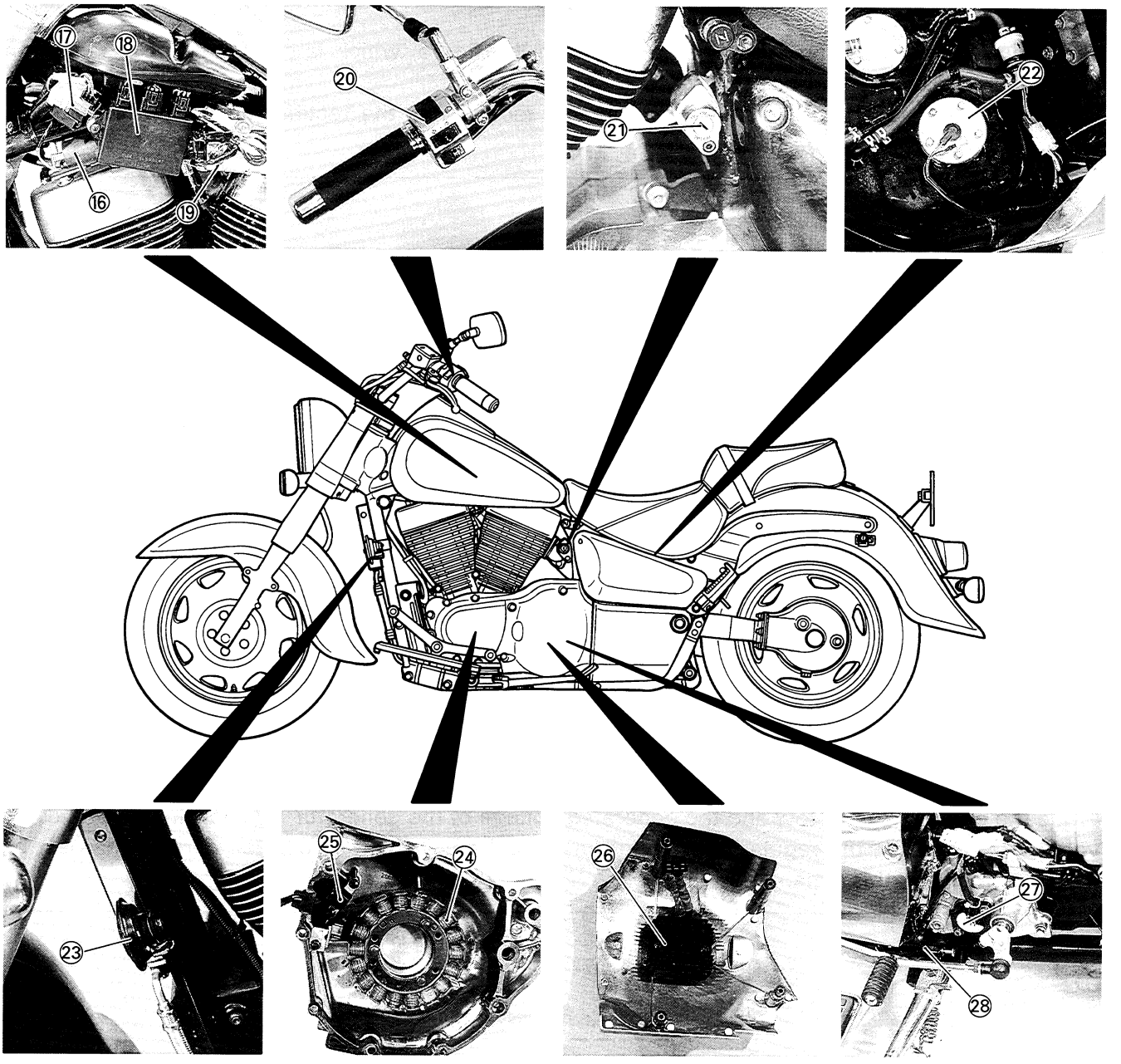


⑯Ignition coil (#2)
⑰Starter relay
⑱Ignitor
⑲Fuel pump
⑳Handlebar switch (L)
㉑Ignition switch
㉒Fuel level gauge
㉓Horn (Except for E-03, -24, -28 and -33)
㉔Generator
㉕Signal generator
㉖Regulator/Rectifier
㉗Neutral indicator light switch
㉘Side-stand switch

# CHARGING SYSTEM

## DESCRIPTION

The circuit of the charging system is indicated in the figure, which is composed of a generator, regulator/rectifier unit and battery.

The AC current generated from the generator is rectified by the rectifier and is turned into DC current, then it charges the battery.

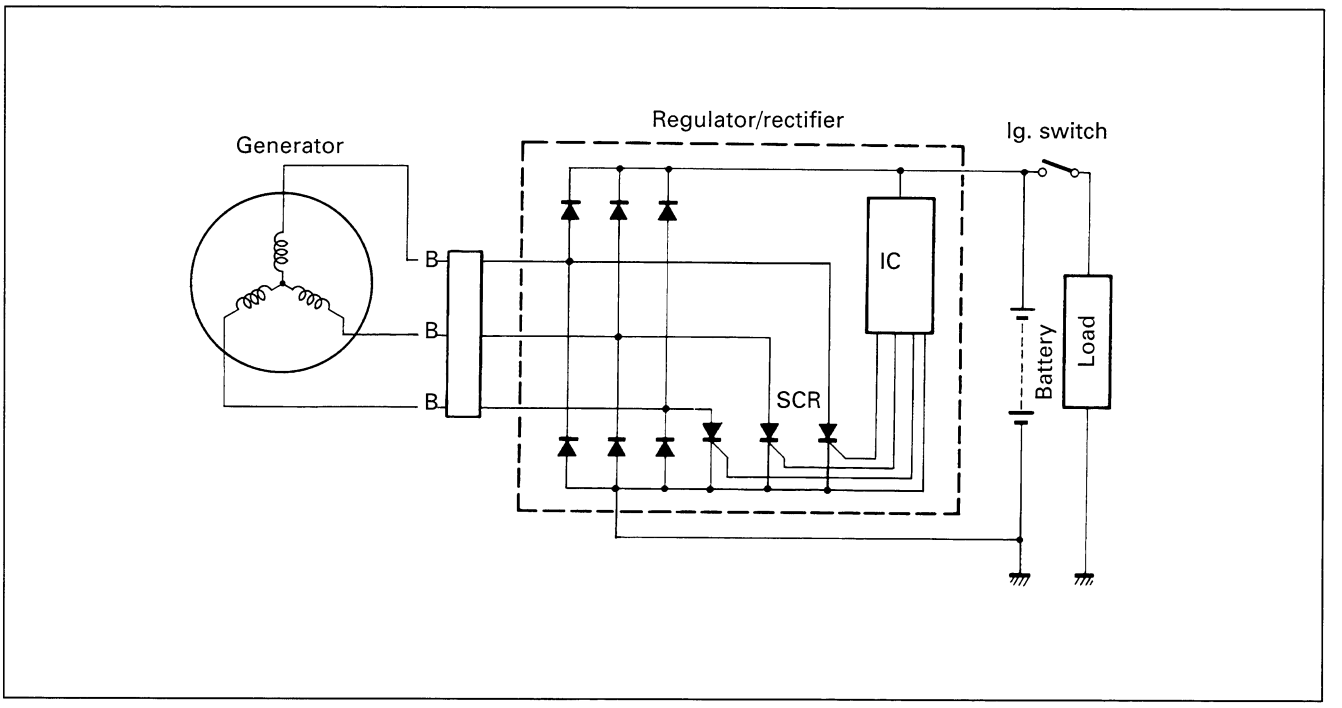


### FUNCTION OF REGULATOR

While the engine r/min is low and the generated voltage of the generator is lower than the adjusted voltage of regulator, the regulator does not function. However, the generated current charges the battery directly at this time.

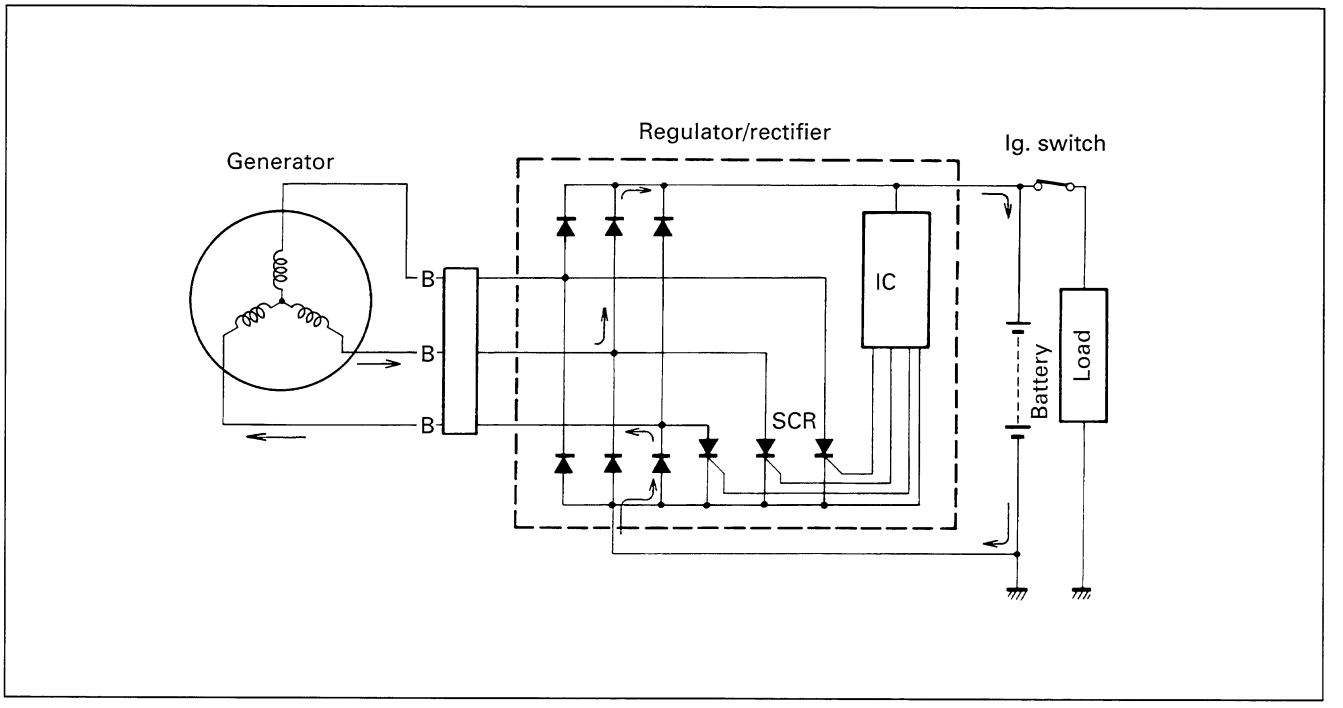

When the engine r/min becomes higher, the generated voltage of the generator also becomes higher and the voltage between the battery terminals becomes high accordingly. When it reaches the adjusted voltage of the I.C., (Integrated Circuit) and it is turned "ON", a signal will be sent to the SCR (Thyristor) gate probe and the SCR will be turned "ON".
Then, the SCR becomes conductive in the direction from point Ⓐ to point Ⓑ. At this time, the current generated from the generator gets through the SCR without charging the battery and returns to generator again. At the end of this state, since the AC current generated from generator flows to point Ⓑ, the reverse current tends to flow to SCR. Then, the circuit of SCR turns to the OFF mode and begins to charge the battery again. Thus these repetitions maintain charging voltage and current to the battery constant and protect it from overcharging.

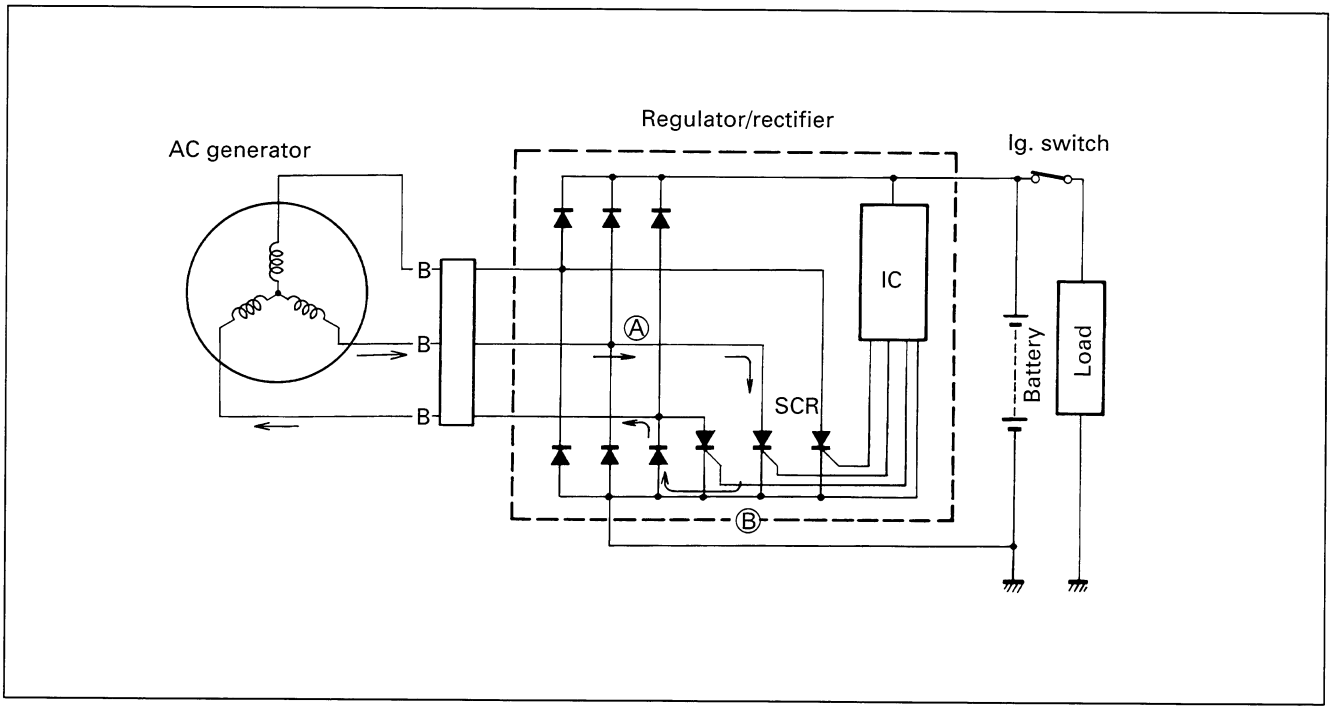

# TROUBLESHOOTING

**Battery runs down quickly.**

Check accessories which use excessive amounts of electricity.
- Accessories are installed → • Remove accessories.
- No accessories ↓

Check the battery for current leaks. (See p. 7-8.)
- Current leak → • Short circuit of the wire harness • Loose or disconnected wires • Faulty battery
- No current leaks ↓

Measure the charging voltage between the battery terminals. (See p. 7-8.)
- Correct → • Faulty battery • Abnormal driving condition
- Incorrect ↓

Measure the continuity of the generator coil. (See p. 7-9.)
- No continuity → • Faulty generator coil or disconnected lead wires
- Continuity ↓

Inspect generator no-load voltage. (See p. 7-9.)
- No good → • Faulty generator
- OK ↓

Inspect regulator/rectifier. (See p. 7-9.)
- No good → • Faulty regulator/rectifier
- OK ↓

Inspect wirings.
- No good → • Short circuit of wire harness • Poor contact of couplers
- OK → • Faulty battery

**Others**

| | |
|---|---|
| Battery overcharge | • Faulty regulator/rectifier<br>• Faulty battery<br>• Poor contact of generator lead wire coupler |

# INSPECTION

## BATTERY CURRENT LEAK INSPECTION

- Turn the ignition switch to the "OFF" position.
- Remove the battery cover ①.
- Disconnect the battery ⊖ lead wire.
- Connect the multi circuit tester between the battery ⊖ terminal and the battery ⊖ lead wire.

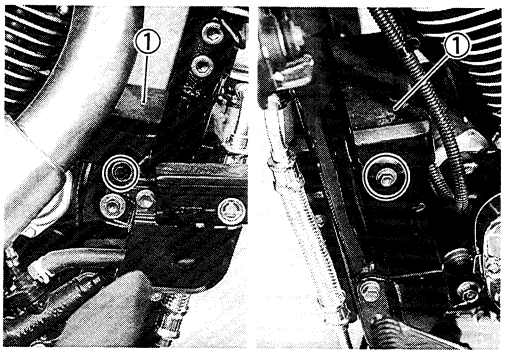


*NOTE:*
*Leakage is evident if the reading is over 1mA.*

**Battery current leak: Under 1mA**

**Tester knob indication: Current ( ⎓ , 20mA)**

**09900-25008: Multi circuit tester set**

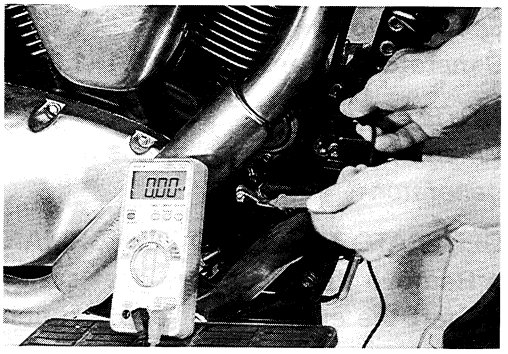

**⚠ CAUTION**

- **Because the current leak might be large, turn the tester to the high range first to avoid tester damage.**
- **Do not turn the ignition switch to the "ON" position when measuring the current.**

When checking to find the excessive current leak, remove the couplers and connectors, one by one, checking each part.

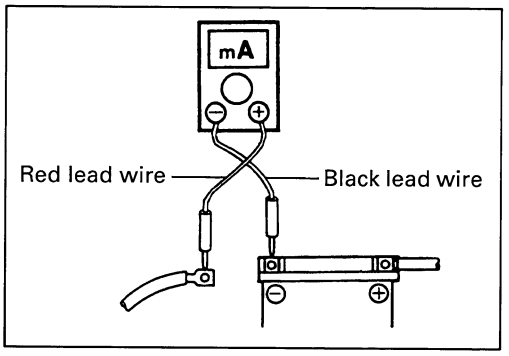


## CHARGING OUTPUT INSPECTION

- Remove the battery cover.
- Start the engine, turn the lighting switch to ON and the dimmer switch to HI and run the engine at 5 000 r/min.

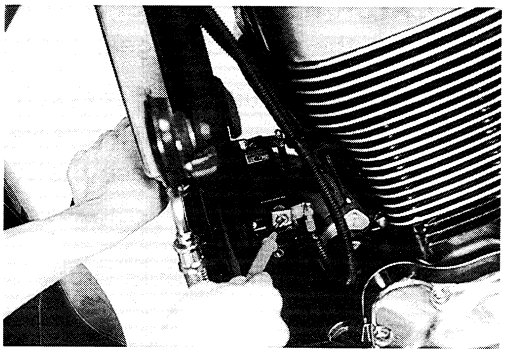

Measure the DC voltage between the battery ⊕ and ⊖ terminals using a multi-circuit tester. If the tester reads under 13.5V or over 15.0V, inspect the stator coil, regulator/rectifier which are mounted in the generator.

*NOTE:*
*When performing this test, make sure that the battery is fully-charged.*

**09900-25008: Multi circuit tester set**

**Tester knob indication: Voltage ( ⎓ )**

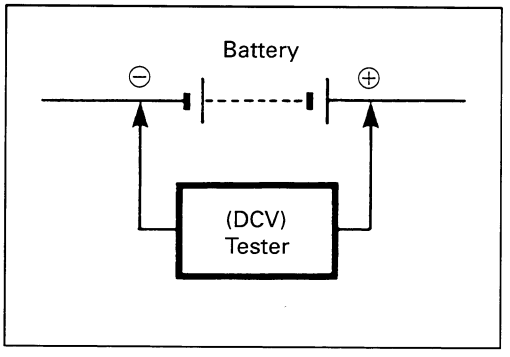


**Specification**
**Charging output (Regulated voltage):**
**13.5–15.0V at 5 000 r/min.**

## GENERATOR COIL RESISTANCE INSPECTION

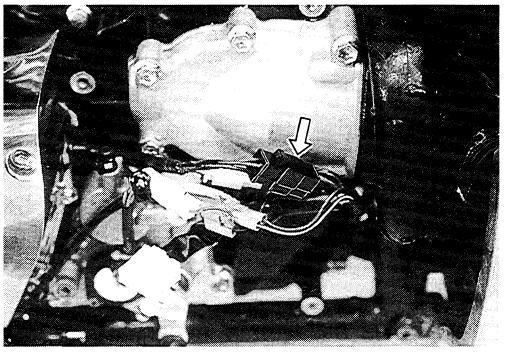

- Remove the secondary gear case cover. (See p. 3-7.)
- Disconnect the generator coupler.

Measure the resistance between the three lead wires.
Also check that the stator core is insulated.
If the resistance is not specified value, replace the stator with a new one.

**TOOL 09900-25008: Multi circuit tester set**

**Tester knob indication: Resistance (Ω)**

**Specification**
**Generator coil resistance: 0.1–1.0 Ω**

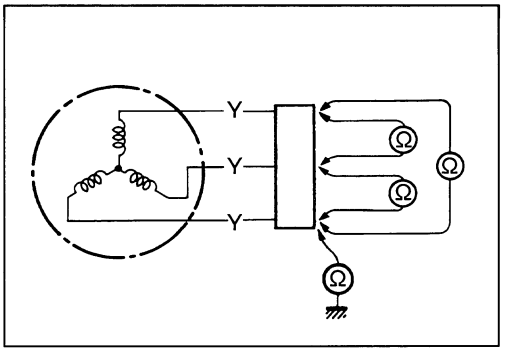


*NOTE:*
*When making above test, it is not necessary to remove the generator.*

## GENERATOR NO-LOAD PERFORMANCE INSPECTION

- Remove the secondary gear case cover. (See p. 3-7.)
- Start the engine and keep it running at 5 000 r/min.

Using a multi circuit tester, measure the voltage between three lead wires.
If the tester reads under the specified value, replace the generator with a new one.

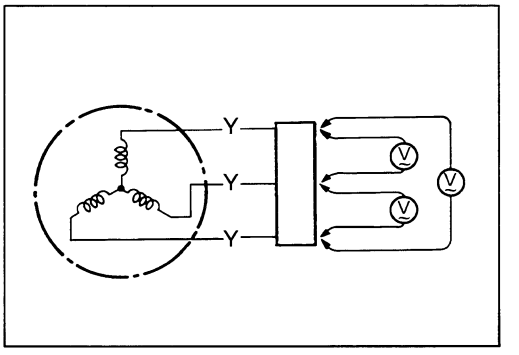


**TOOL 09900-25008: Multi circuit tester set**

**Tester knob indication: Voltage (~)**

**Specification**
**Generator no-load performance (When engine is cold):**
**More than 80V (AC) at 5 000 r/min**

## REGULATOR/RECTIFIER INSPECTION

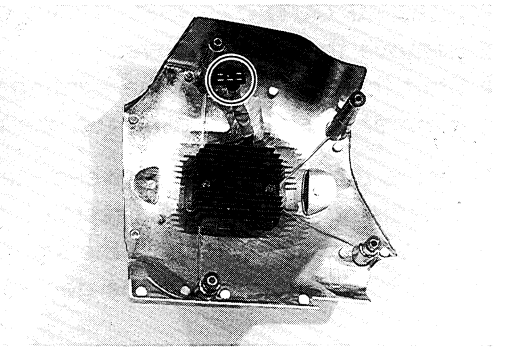

- Remove the secondary gear case cover. (See p. 3-7.)

Using a multi circuit tester, measure the voltage between the lead wires in the following table.
If voltage is incorrect, replace the regulator/rectifier.

**TOOL 09900-25008: Multi circuit tester set**

**Tester knob indication: Diode test (⊣◀)**

Unit: V

| ⊖ Probe of tester to: | ⊕ Probe of tester to: B/R | $B_1$ | $B_2$ | $B_3$ | B/W |
|---|---|---|---|---|---|
| B/R | | 0.4~0.7 | 0.4~0.7 | 0.4~0.7 | 0.5~1.2 |
| $B_1$ | Approx. 1.5 | | Approx. 1.5 | Approx. 1.5 | 0.4~0.7 |
| $B_2$ | Approx. 1.5 | Approx. 1.5 | | Approx. 1.5 | 0.4~0.7 |
| $B_3$ | Approx. 1.5 | Approx. 1.5 | Approx. 1.5 | | 0.4~0.7 |
| B/W | Approx. 1.5 | Approx. 1.5 | Approx. 1.5 | Approx. 1.5 | |

B: Black, B/R: Black with Red tracer, B/W: Black with White tracer

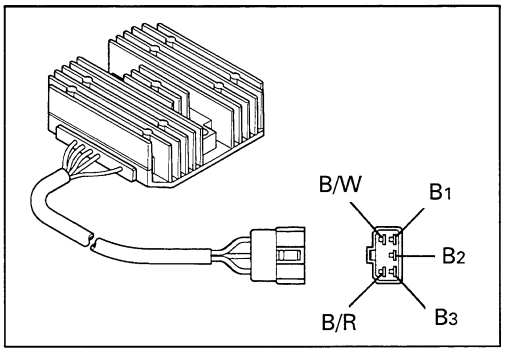


*NOTE:*
*If the tester read under 1.4V, replace the battery of multi circuit tester when do not connecting the tester probes.*

# AUTOMATIC DE-COMPRESSION SYSTEM, STARTER SYSTEM AND SIDE-STAND IGNITION INTERLOCK SYSTEM

## AUTOMATIC DE-COMPRESSION SYSTEM AND STARTER SYSTEM DESCRIPTION

The automatic de-compression system and starter system consist of the following components: the automatic de-compression solenoid, automatic de-compression relay, starter motor, starter relay, ignitor, signal generator and battery.

The ignitor controls the timing of lifting the de-compression lever up and down, and the start timing of the starter motor.

### AUTOMATIC DE-COMPRESSION SYSTEM AND STARTER SYSTEM OPERATION

When the ignition switch is turned ON, a 12V voltage is applied to ignitor. When all of the side-stand relay, engine stop switch, clutch lever position switch and starter button are turned ON, the I.C. (Integrated Circuit) outputs the signal to the transistor ①. At the same time, the automatic de-compression relay is turned ON and the solenoid lifts up the de-compression lever. When the I.C. outputs the signal to the transistor ② 0.1 second after the starter button is pushed, the starter relay is turned ON and thus the starter motor starts to run. The signal generator senses the crank-shaft position. When the signal generator picks up two signals of front cylinder, the I.C. cut off the signal to the transistor ① and the de-compression relay is turned OFF. The de-compression lever returns to the normal position.

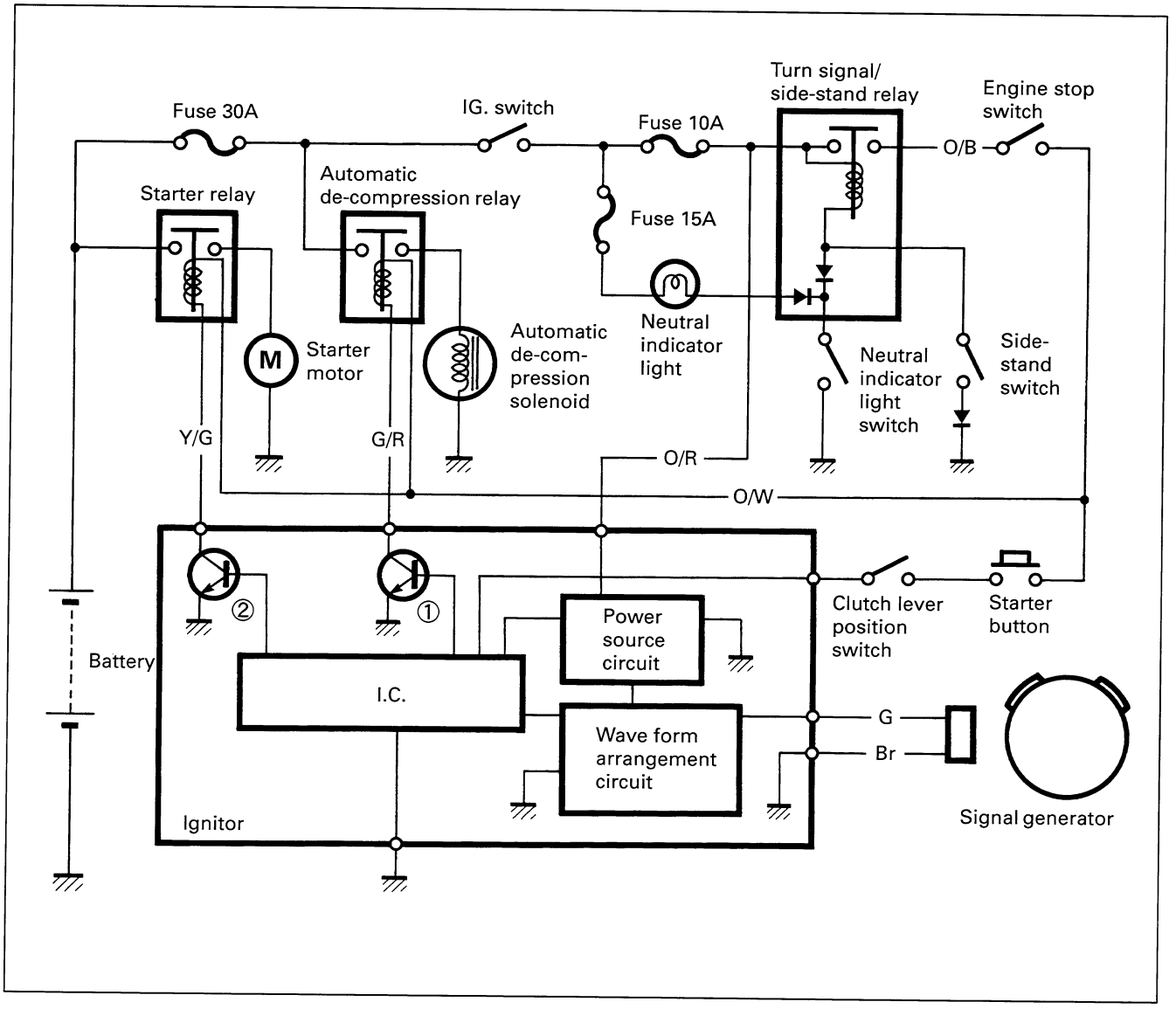

## SIDE-STAND/IGNITION INTERLOCK SYSTEM DESCRIPTION

This system consists of the following components: the turn signal/side-stand relay, neutral indicator light switch, neutral indicator light and side-stand switch.

This side-stand/ignition interlock system prevents the motorcycle from being started with the side-stand down. The ignition coil, de-compression relay and starter relay operation depend on what gear the transmission is in and whether the side-stand is either up or down. The neutral indicator light switch and side-stand switch work together in this system.

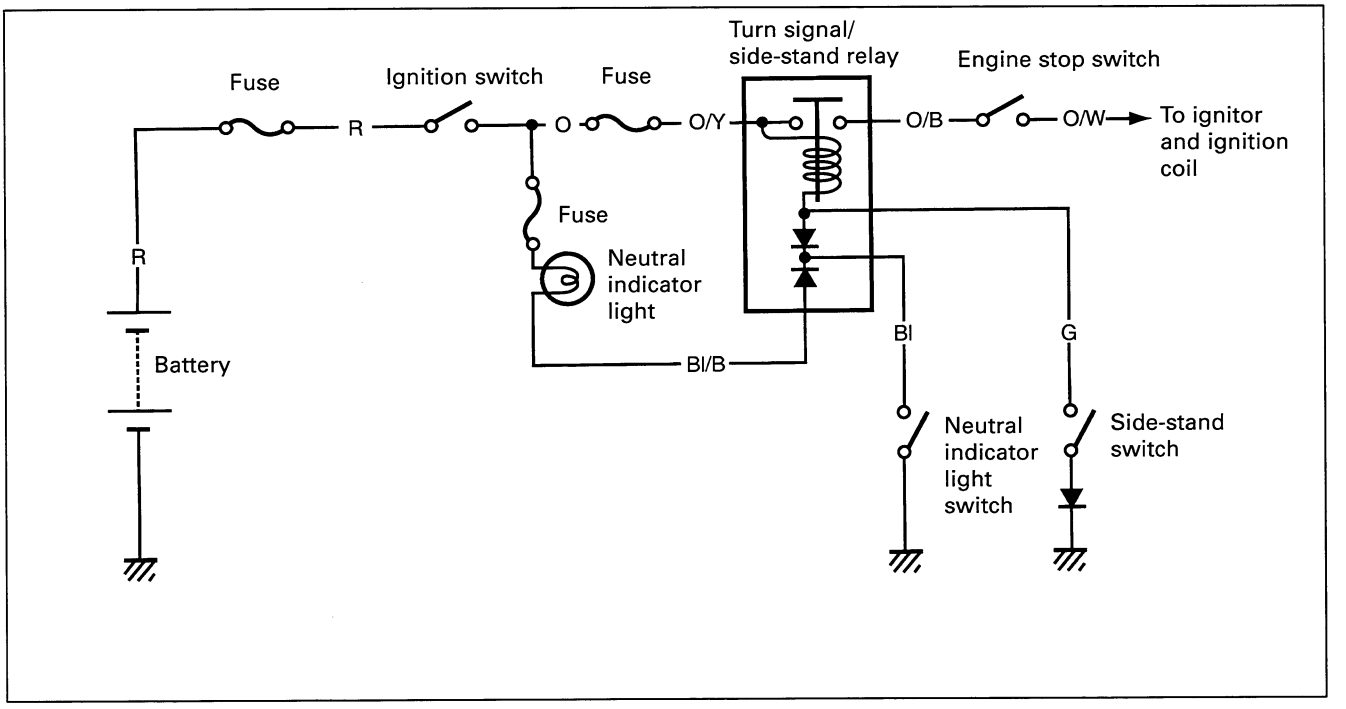


### SIDE-STAND/IGNITION INTERLOCK SYSTEM OPERATION

The ignition coils work only in two situations as follows.

1. Transmission: Neutral (ON) Side-stand: Down (OFF)
   The current flow Ⓐ switches "on" the side-stand relay and the ignition coils send voltage to the spark plugs even when the side-stand is kept down.

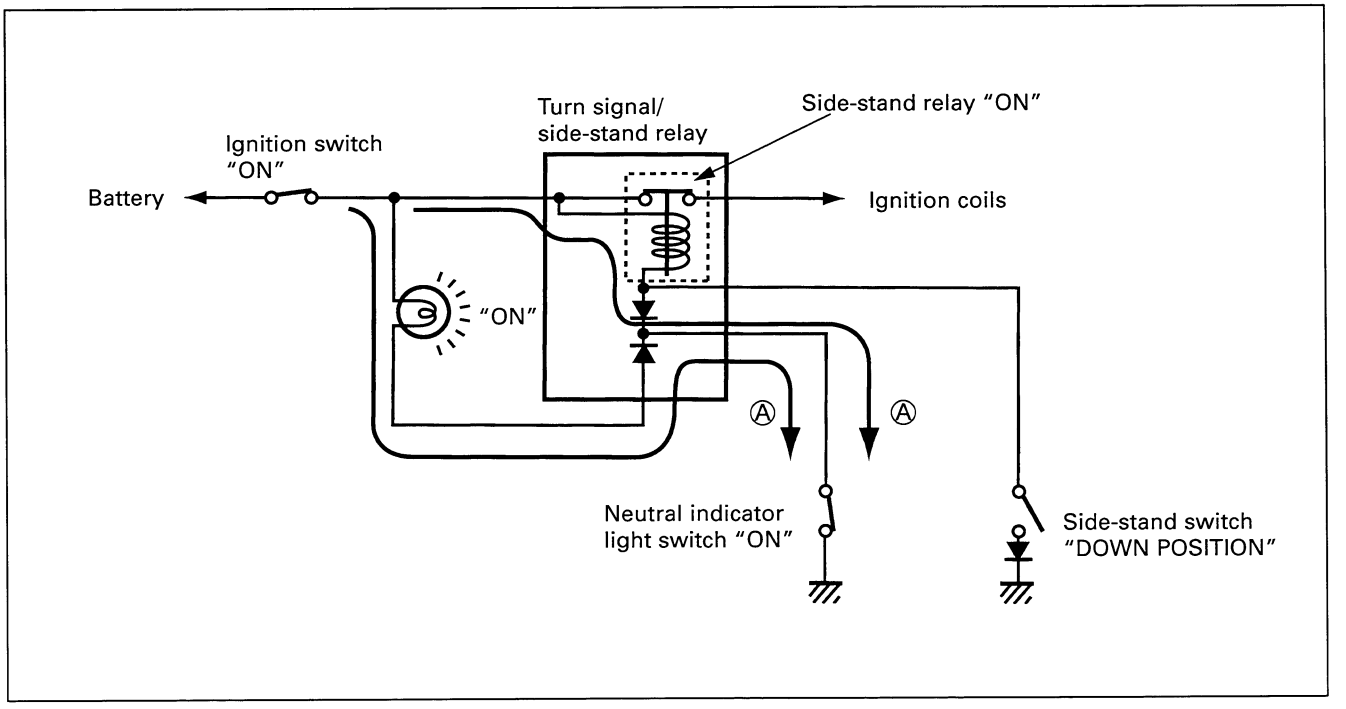

2. Side-stand: Up (ON)
   The current flow Ⓑ switches "on" the side-stand relay and the ignition coils send voltage to the spark plugs. The engine can be started in any gear.

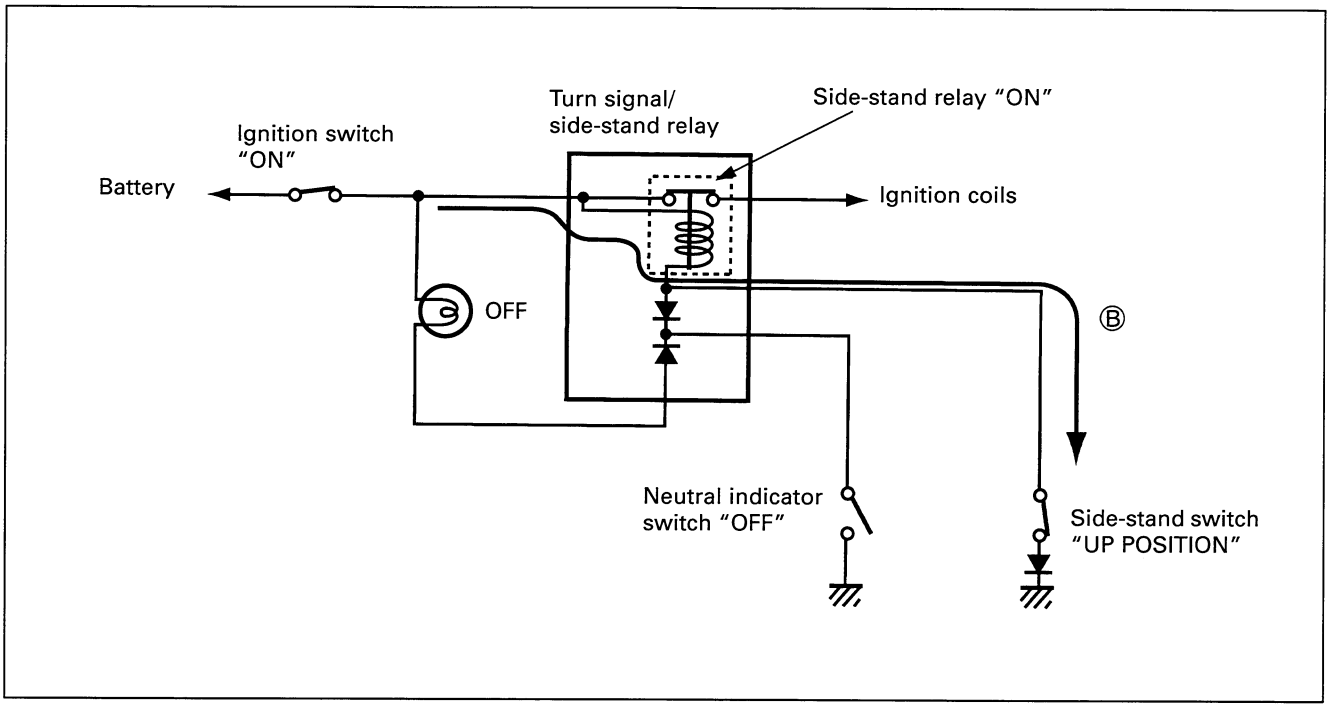


## TROUBLESHOOTING

**Starter motor will not run.**

* Check that the transmission is in neutral and the engine stop switch is in the "RUN" position. Grasp the clutch lever. Check that the fuses are not blown and battery is in fully-charged condition before the diagnosis.

Listen for a click from the starter relay when the starter button is pushed.

- No click → Check the starter relay. (See pp. 7-17 and -18.)
  - OK →
    - Faulty ignition switch
    - Faulty engine stop switch
    - Faulty clutch lever position switch
    - Faulty neutral switch
    - Faulty turn signal/side-stand relay
    - Faulty starter button
    - Poor contact of connector
    - Open circuit in wire harness
  - No good →
    - Faulty starter relay
- Clicks →

Check if the starter motor runs when its terminal is connected to the battery ⊕ terminal. (Do not use a thin "wire" because a large amount of current flows.)

- Runs → Check the starter relay. (See pp. 7-17 and -18.)
- Does not turn →
  - Faulty starter motor

# TROUBLESHOOTING

**Starter motor is hard to run.**

* Check that the transmission is in neutral and the engine stop switch is in the "RUN" position. Grasp the clutch lever. Check that the fuses are not blown and battery is fully-charged condition before the diagnosis.

Check if the starter motor runs properly when its terminal is connected to the battery ⊕ terminal. (Do not use a thin "wire" because a large amount of current flows.)

- hard to run → • Faulty starter motor

Run ↓

Check if the automatic de-compression solenoid works properly when the starter button is pushed.

- Works → • Faulty automatic de-compression cam
  • Automatic de-compression cable is out of adjustment. (See pp. 2-8 and -9.)

Does not work ↓

Check the automatic de-compression solenoid. (See p. 7-21.)

- No good → • Faulty automatic de-compression solenoid

OK ↓

Check the automatic de-compression relay. (See p. 7-20.)

- No good → • Faulty automatic de-compression relay

OK →
- • Faulty ignitor
- • Poor contact of connector

The starter motor runs when the transmission is in neutral, but does not run with the transmission is in any position other than neutral, with the side-stand up.

Check the side-stand switch. (See p. 7-19.)

- No good → • Faulty side-stand switch

OK →
- • Open circuit in wire harness
- • Poor contact of connector

**Others**

| | |
|---|---|
| Engine does not turn though starter motor runs. | • Faulty starter clutch<br>• Faulty starter torque limiter |

## STARTER MOTOR REMOVAL AND DISASSEMBLY

- Remove the engine side box. (See p. 3-3.)
- Remove the exhaust pipe and muffler. (See p. 3-5.)

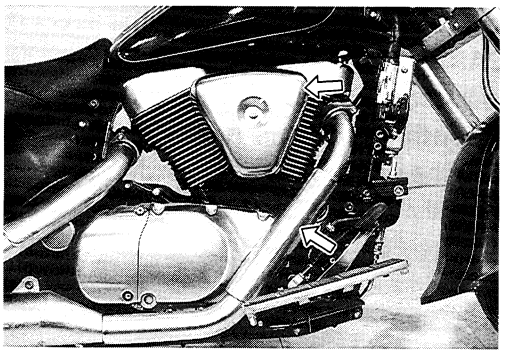

- Disconnect the starter motor lead wire.
- Remove the starter motor by removing the mounting bolts.

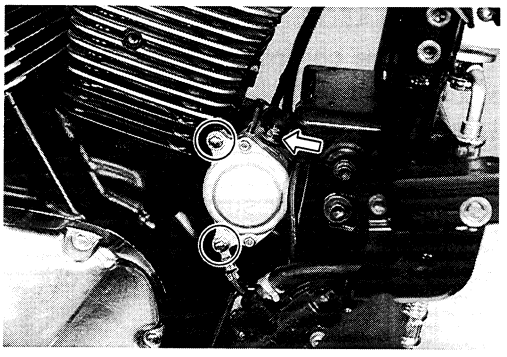

- Disassemble the starter motor, as shown in the illustration.

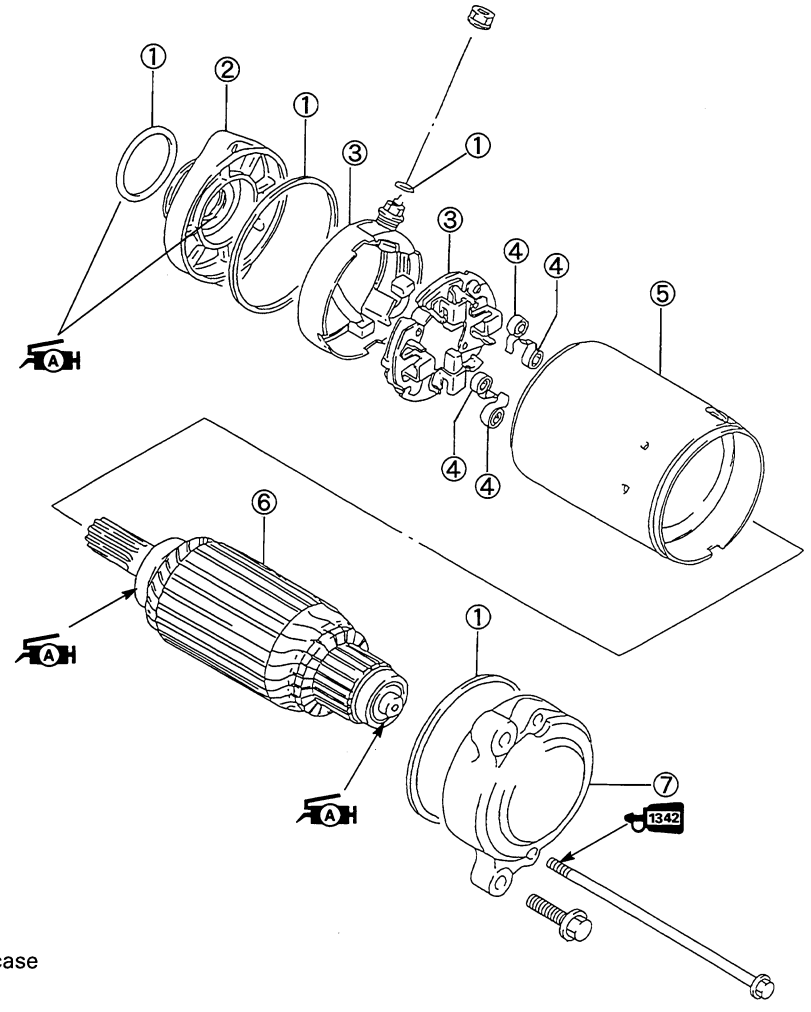


① O-ring
② Housing end
③ Brush holder
④ Brush spring
⑤ Starter motor case
⑥ Armature
⑦ Housing end

# STARTER MOTOR INSPECTION

## CARBON BRUSHES

Inspect the carbon brushes for abnormal wear, cracks or smoothness in the brush holder.
If either carbon brush is defective, replace the brush assembly.

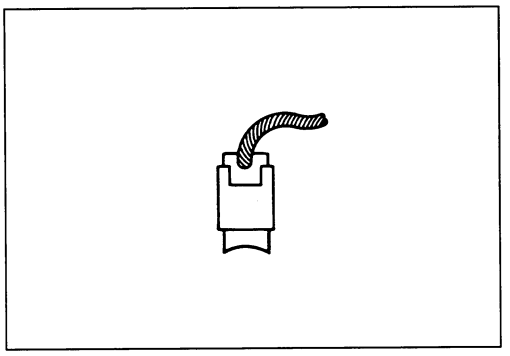

## COMMUTATOR

Inspect the commutator for discoloration, abnormal wear or undercut Ⓐ.
If the commutator is abnormally worn, replace the armature.
If the commutator surface is discolored, polish it with #400 sandpaper and wipe it using a clean, dry cloth.
If there is no undercut, scrape out the insulator ① with a saw blade.

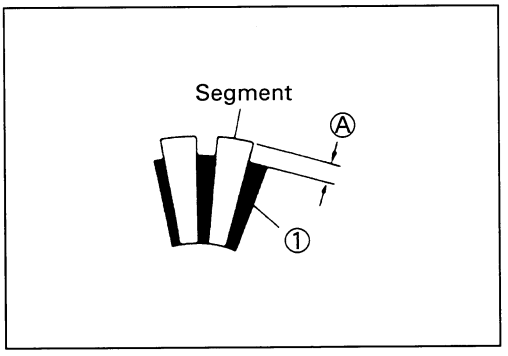


## ARMATURE COIL INSPECTION

Measure for continuity between each segment.
Measure for continuity between each segment and the armature shaft.
If there is no continuity between the segments or there is continuity between the segments and shaft, replace the armature with a new one.

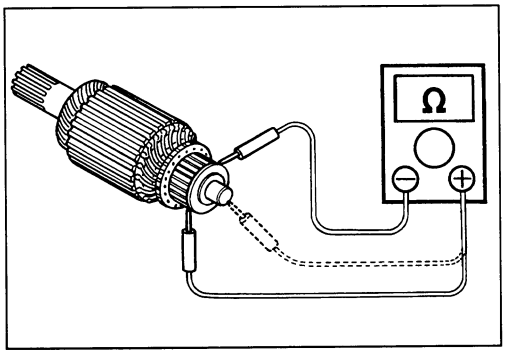


## BEARING INSPECTION

Inspect the play of the bearings by hand. Rotate the outer race by hand to inspect it for abnormal noise and smooth rotation.

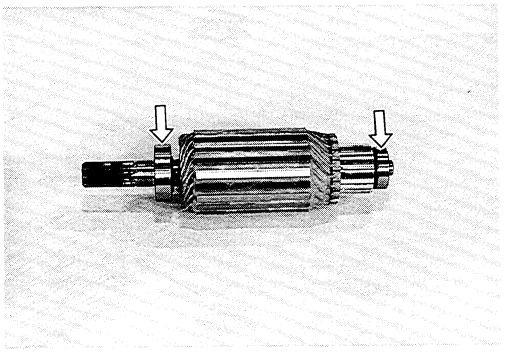

## OIL SEAL INSPECTION

Check the seal lip for damage or leakage.
If any damage is found, replace the housing end (inside).

## STARTER MOTOR REASSEMBLY AND INSTALLATION

Reassemble the starter motor in the reverse order of disassembly. Pay attention to the following points:

**▲ CAUTION**

**Replace the O-rings with new ones to prevent oil leakage and moisture.**

- Apply SUZUKI SUPER GREASE "A" to the lip of the oil seal.

**Ⓐ 99000-25010: SUZUKI SUPER GREASE "A"**

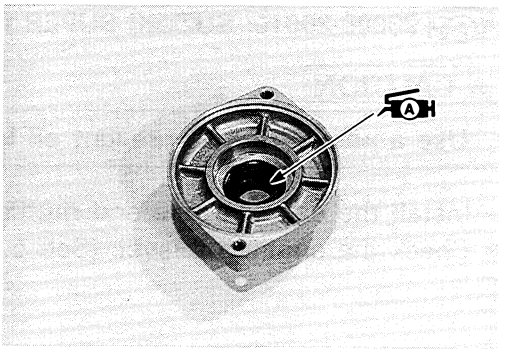


- Before installing the terminal nut, install the O-ring.

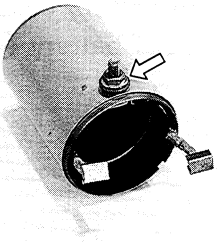

- Align the protrusion Ⓐ of the bush holder with the groove Ⓑ of the starter motor case.

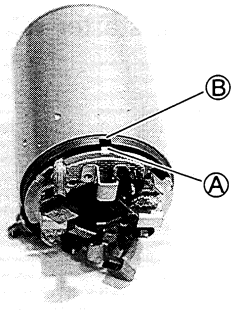


- Align the match marks on the starter motor case with the match marks on the housing ends.

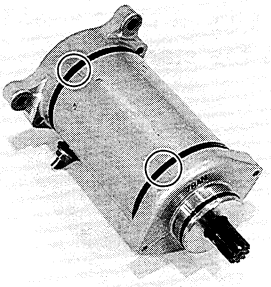

- Apply a small quantity of THREAD LOCK "1342" to the starter motor housing bolts.

**99000-32050: THREAD LOCK "1342"**

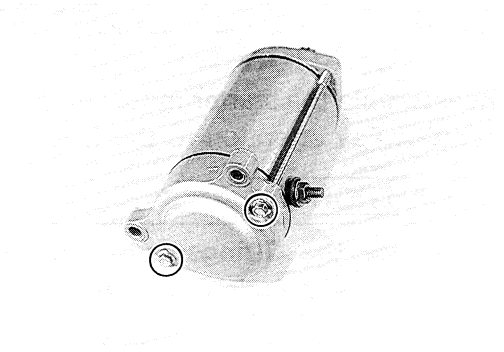

- Install the starter motor with two bolts.

*NOTE:*
** Fit the ground lead wire to the lower bolt as shown.*
** Apply SUZUKI SUPER GREASE "A" to the starter motor O-ring.*

**99000-25010: SUZUKI SUPER GREASE "A"**

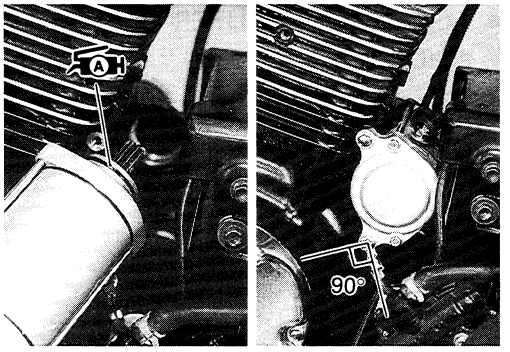


**⚠ CAUTION**

**Use a new O-ring to prevent oil leakage.**

- Install the exhaust pipe and muffler. (See p. 3-15.)
- Check the engine oil level. (See p. 2-6.)

## STARTER RELAY INSPECTION

- Remove the left side upper cover ①. (See p. 6-3.)
- Remove the battery cover ②.
- Disconnect the battery ⊖ lead wire.

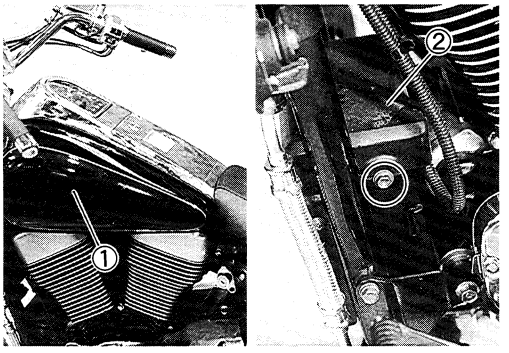


- Disconnect the starter relay coupler ③.
- Remove the starter relay cover ④.

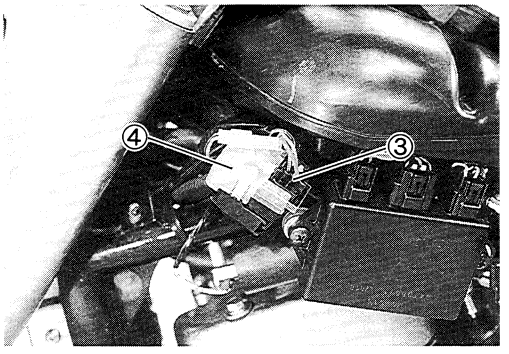


- Disconnect the starter motor lead wire ⑤ and battery lead wire ⑥ at the starter relay.
- Remove the starter relay.

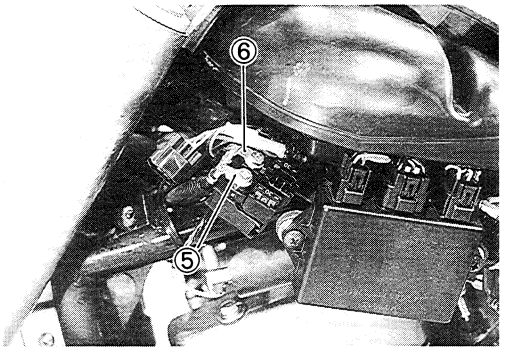

Apply 12 volts to terminals Ⓐ and Ⓑ and measure for continuity between the positive and negative terminals.
If the starter relay clicks and continuity is found, the relay is ok.

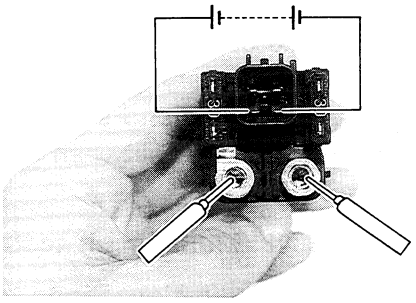

**TOOL 09900-25008: Multi circuit tester set**

**Tester knob indication: Continuity test ( •))) )**

**⚠ CAUTION**

**Do not apply battery voltage to the starter relay for more than five seconds.**
**This may overheat and damage the relay coil.**

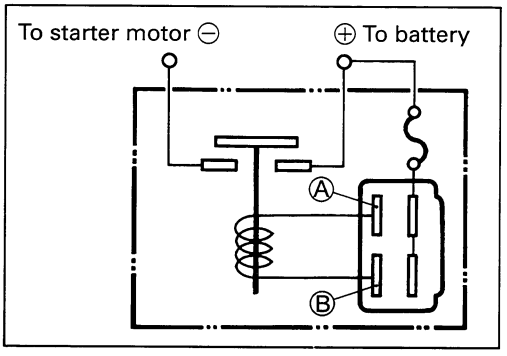


- Check the relay coil for opens, grounds and the specified resistance.

**Specification**
**Starter relay resistance: 3–6Ω**

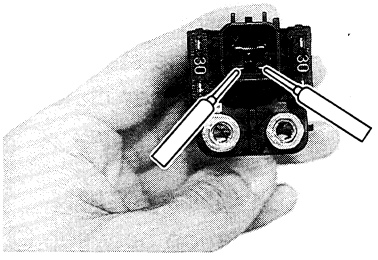

## SIDE-STAND/IGNITION INTERLOCK SYSTEM PART INSPECTION

If the interlock system does not operate properly, check each component. If any abnormality is found, replace the component with a new one.

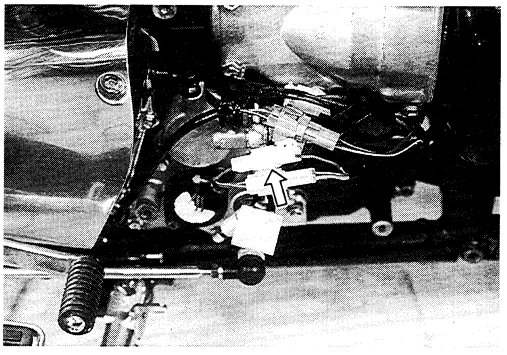

### NEUTRAL SWITCH

The neutral position indicator switch coupler is behind the secondary gear case cover.

- Remove the secondary gear case cover. (See p. 3-7.)
- Disconnect the neutral position indicator switch coupler and measure the continuity between Blue and Ground with the transmission in neutral.

| | Blue | Ground |
|---|---|---|
| ON (in neutral) | ○ | ○ |
| OFF (not in neutral) | | |

## SIDE-STAND SWITCH

The side-stand switch coupler is located behind the secondary gear case cover.

- Remove the secondary gear case cover. (See p. 3-7.)
- Disconnect the side-stand switch lead wire coupler and measure the voltage between Green and Black/White lead wires.

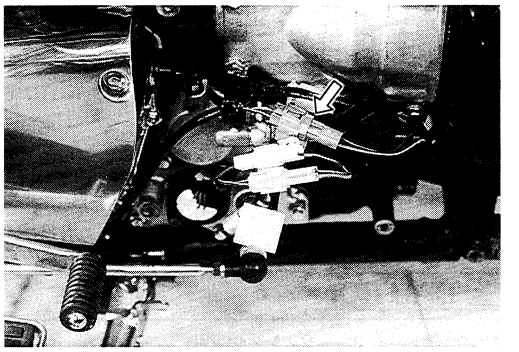

**TOOL 09900-25008: Multi circuit tester set**

**Tester knob indication: Diode test ( ⊣◀ )**

| | Green (⊕ Probe) | Black/White (⊖ Probe) |
|---|---|---|
| ON (UP-right position) | 0.4–0.6 V | |
| OFF (Down position) | 1.4–1.5 V | |

*NOTE:*
*If the tester read under 1.4V, replace the battery of multi circuit tester when do not connecting the tester probes.*

## TURN SIGNAL/SIDE-STAND RELAY

The turn signal relay is corporated with the side-stand relay and diode to form the one component part which is called the turn signal/side-stand relay.
It is located behind the rear clutch cover.

- Remove the rear clutch cover.

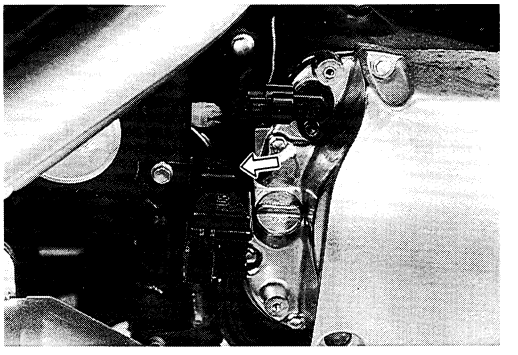

## SIDE-STAND RELAY INSPECTION

First, check the insulation between Ⓓ and Ⓔ terminals with tester. Then apply 12 volts to Ⓓ and Ⓒ terminals, ⊕ to Ⓓ and ⊖ to Ⓒ, and check the continuity between Ⓓ and Ⓔ. If there is no continuity, replace turn signal/side-stand relay with a new one.

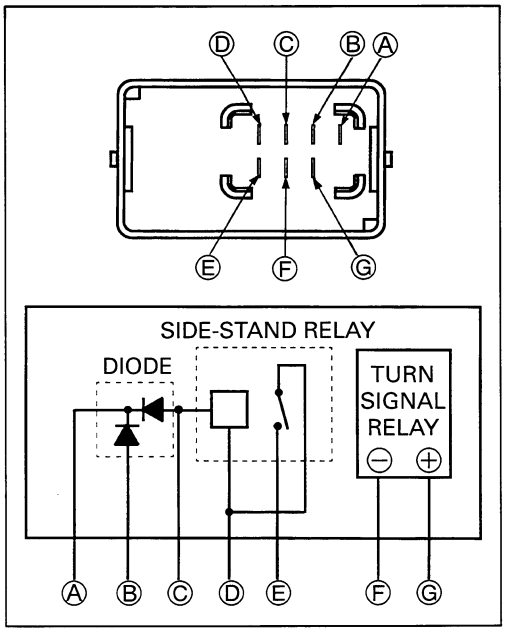

### DIODE INSPECTION

Using multi circuit tester, measure the voltage between the terminals in the following table.

Unit: V

| ⊖ Probe of tester to: | ⊕ Probe of tester to: | | |
|---|---|---|---|
| | | Ⓒ, Ⓑ | Ⓐ |
| | Ⓒ, Ⓑ | | 1.4–1.5 |
| | Ⓐ | 0.4–0.6 | |

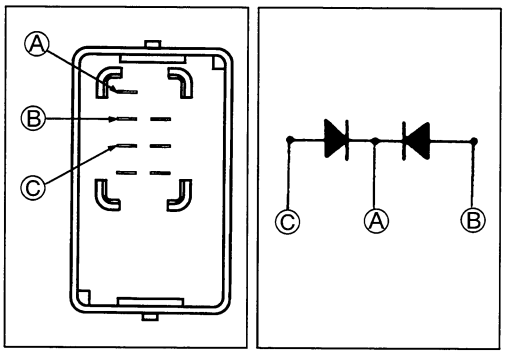


**TOOL 09900-25008: Multi circuit tester set**

**Tester knob indication: Diode test ( ⊣◀ )**

*NOTE:*
*If the tester read under 1.4V, replace the battery of multi circuit tester when do not connecting the tester probes.*

## AUTOMATIC DE-COMPRESSION RELAY INSPECTION

The automatic de-compression relay is located behind the right side upper cover.

- Remove the right side upper cover. (See p. 6-3.)
- Disconnect the lead wire coupler from the automatic de-compression relay.

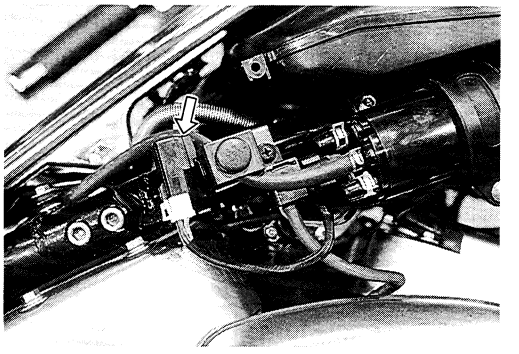

First, check the insulation between Ⓓ and Ⓔ terminals with a tester. Then apply 12 volts to Ⓕ and Ⓖ terminals, ⊕ to Ⓕ and ⊖ to Ⓖ, and check the continuity between Ⓓ and Ⓔ. If there is no continuity, replace turn signal/side-stand relay with a new one.

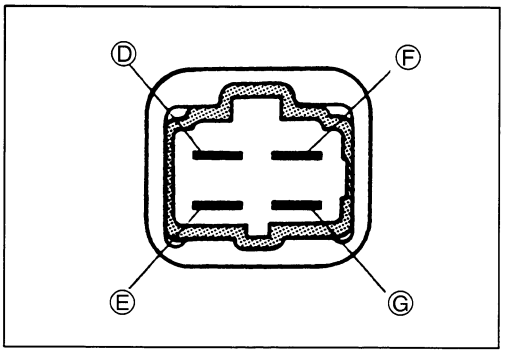

## AUTOMATIC DE-COMPRESSION SOLENOID INSPECTION

The automatic de-compression solenoid coupler is located behind the right side frame head cover.

- Remove the right side frame head cover. (See p. 6-3.)

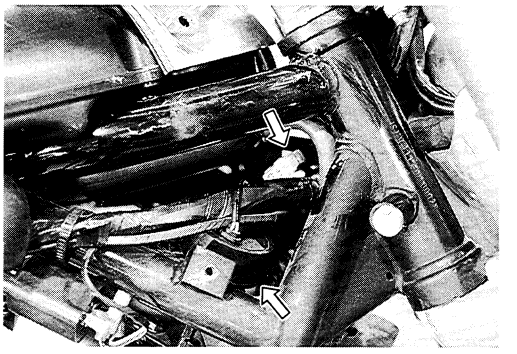

- Measure the resistance between the two lead wires. If the resistance is not specified value, replace the automatic de-compression solenoid with a new one.

**Specification**

**Automatic de-compression solenoid resistance:**

**0.1–1.0 Ω (White–While)**

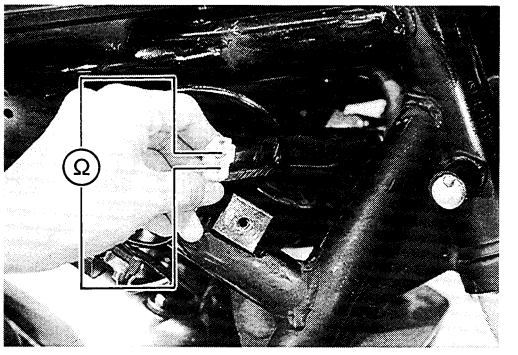


- Apply DC 12V to the solenoid. If the automatic de-compression solenoid does not work properly, replace it with a new one.

*NOTE:*

*Neglect the positive and negative leads when applying 12V to the automatic de-compression solenoid.*

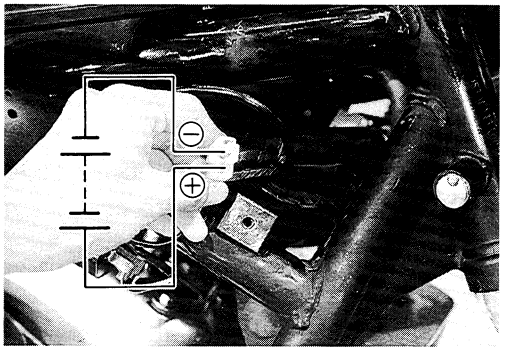


**⚠ CAUTION**

**Do not apply 12V to the automatic de-compression solenoid for more than 5 seconds or damage to its coil may occur.**

*NOTE:*

*The automatic de-compression solenoid unit can be removed after removing the air cleaner box and front cylinder head side cap.*

# IGNITION SYSTEM (DIGITAL IGNITOR)

## DESCRIPTION

The fully transistorized ignition system consists of the following components: a signal generator (which is made up of the generator rotor and pickup coil), ignitor (including a 8-bit microcomputer), throttle position sensor, MAP sensor, two ignition coils and two spark plugs.

The induced signal in the signal generator is sent to the wave–form arrangement circuit and the I.C. receives this signal and calculates the ignition timing. And also the signals of the throttle position sensor and MAP sensor revise ignition timing properly. The I.C. outputs the signal to the transistor of the ignition coil output circuit which is connected to the primary windings of the ignition coils which is turned "off" and "on" accordingly. Thus, it induces the secondary current in the ignition coil's secondary windings and produces the spark between the spark plug gaps.

The ignition cutoff circuit is incorporated in the ignitor to prevent the engine from overreving. If the engine speed reaches 6 000 r/min, this circuit will cutoff the ignition primary current for all of the spark plugs.

**⚠ CAUTION**

**The engine is capable of running at over 6 000 r/min without a load, even if the ignition cutoff circuit is in effect; however, this may cause engine damage. Therefore, never run the engine over 6 000 r/min without a load.**

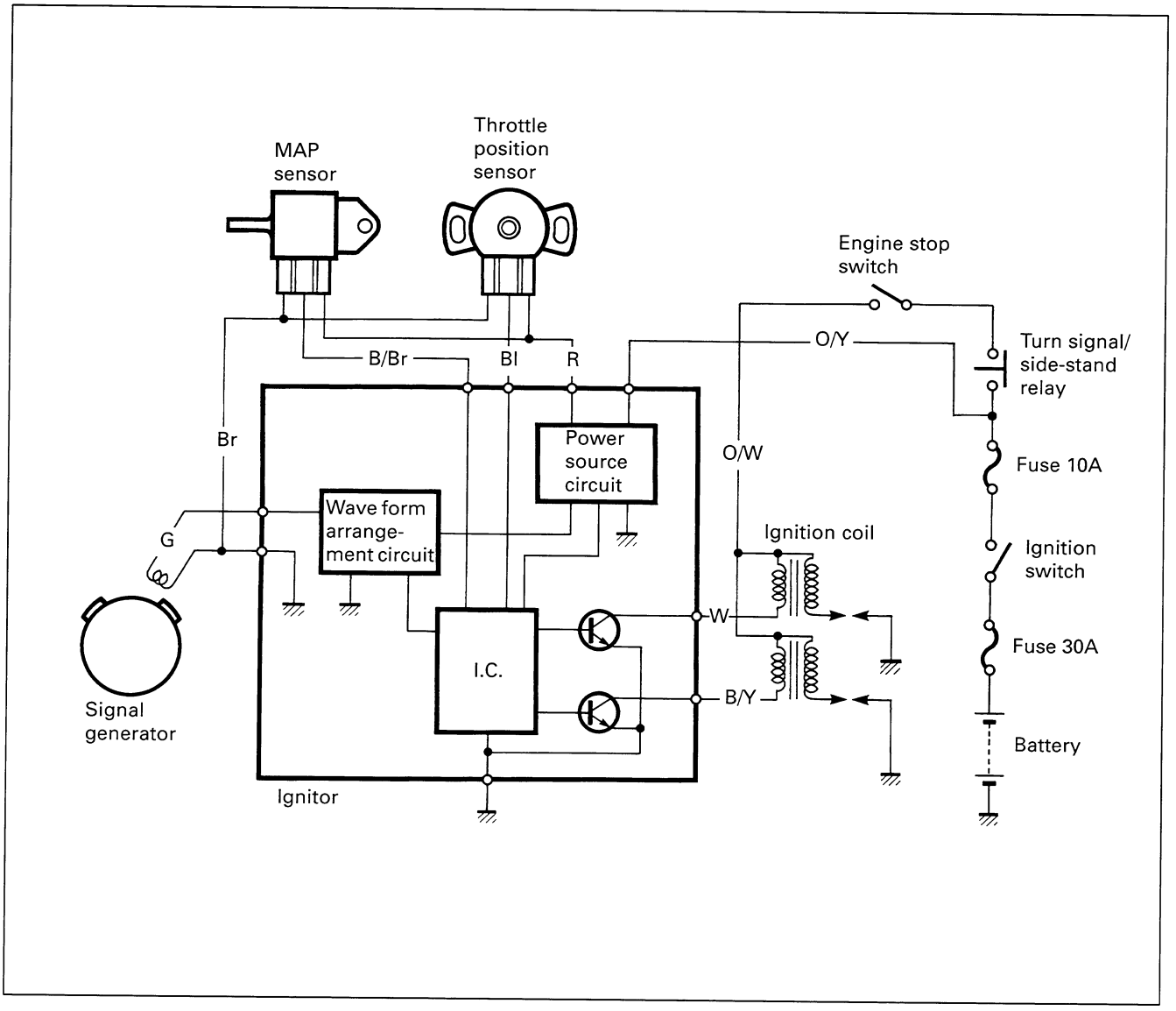

# TROUBLESHOOTING

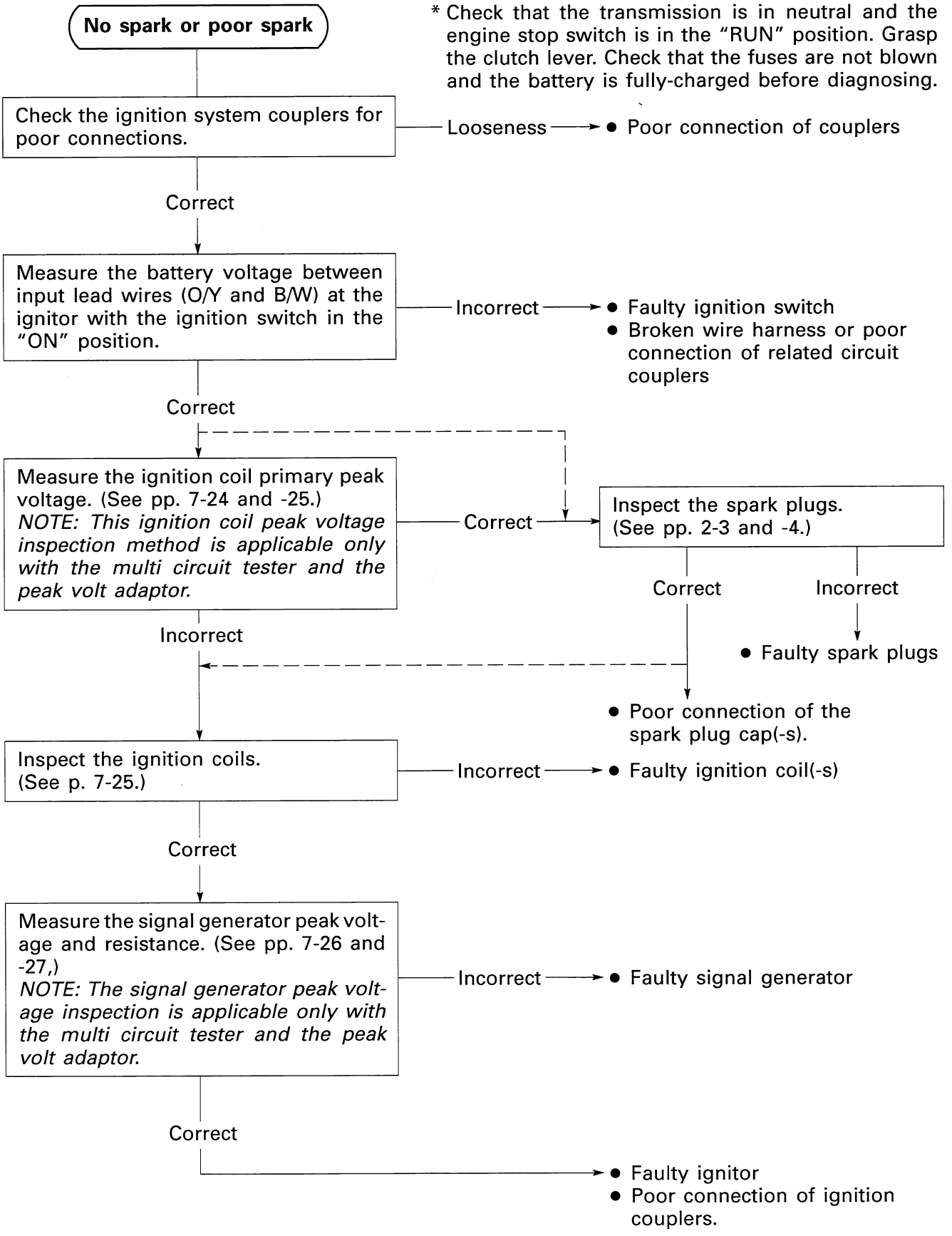

# INSPECTION

## IGNITION COIL PRIMARY PEAK VOLTAGE

- Remove the upper covers. (See p. 6-3.)
- Remove the cylinder head side caps.
- Remove all of the spark plug caps.
- Connect two new spark plugs to each spark plug cap and ground them to the cylinder head.

*NOTE:*

** Make sure that all of the spark plug caps and spark plugs are connected properly and the battery is fully-charged.*

** Make sure that the automatic de-compression cables are adjusted properly.*

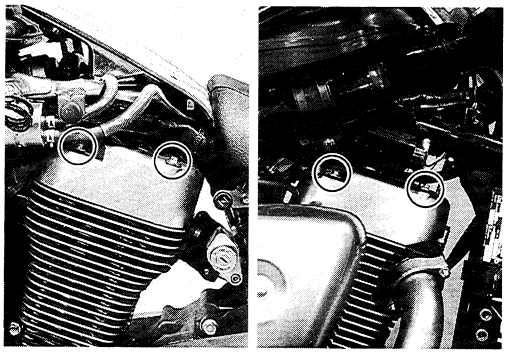

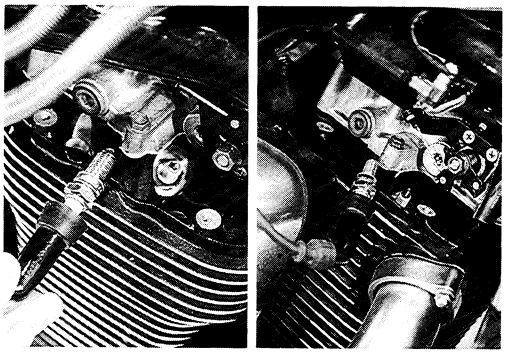

Measure ignition coil (for #1 cylinder) primary peak voltage in the following procedure.

- Connect the multi circuit tester with the peak voltage adaptor as follows.

Ignition coil (For #1 cylinder): White terminal– Ground
(⊕ Probe) (⊖ Probe)

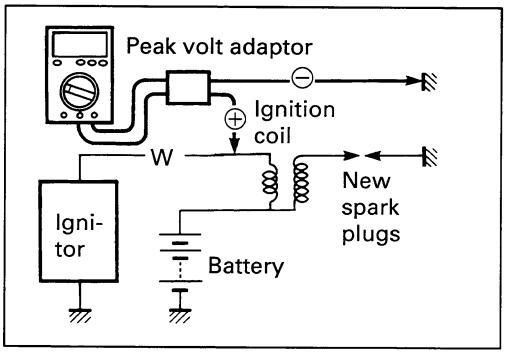


*NOTE:*

*Do not disconnect the ignition coil primary wire.*

**TOOL 09900-25008: Multi circuit tester set**

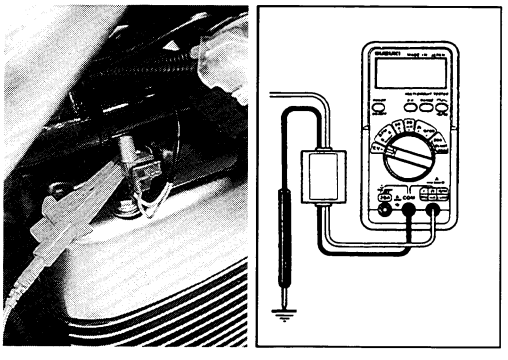

**⚠ CAUTION**

**When using the multi circuit tester and peak volt adaptor, refer to the appropriate instruction manual.**

- Shift the transmission into neutral, turn the ignition switch to the "ON" position and grasp the clutch lever.
- Press the starter button and allow the engine to crank for a few seconds, and then measure the ignition coil primary peak voltage.
- Repeat the above procedure a few times and measure the highest ignition coil primary peak voltage.

**Tester knob indication: Voltage ( ⎓ )**

**Specification**

**Ignition coil primary peak voltage (Rear): More than 200 V**

**⚠ WARNING**

**While testing, do not touch the tester probes and spark plugs to prevent receiving an electric shock.**

Measure ignition coil (For #2 cylinder) primary peak voltage in the same manner as cylinder ignition coil (For #1 cylinder) measuring procedure.

Ignition coil (For #2 cylinder): B/Y terminal – Ground
(⊕ Probe) (⊖ Probe)

B/Y: Black with Yellow tracer

*NOTE:*
*Do not disconnect the ignition coil primary wire.*

**Tester knob indication: Voltage ( ⎓ )**

**Specification**
**Ignition coil primary peak voltage (Front): More than 190 V**

If the voltages are lower than the standard values, inspect the ignition coil and the signal generator. (See pp. 6-25 to -27.)

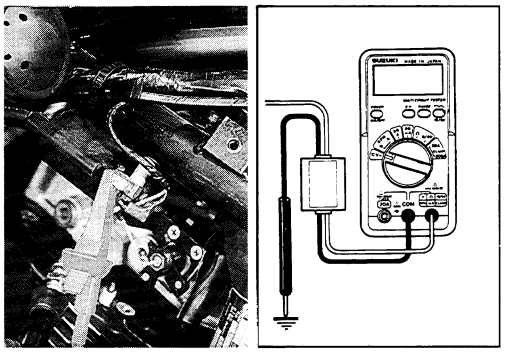

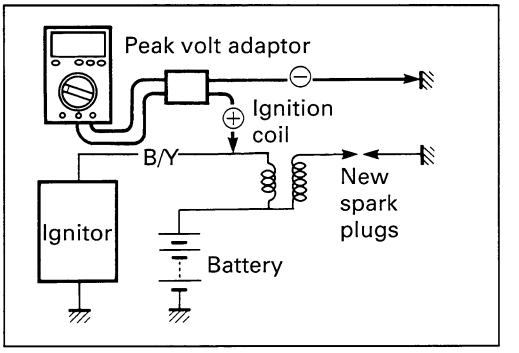


**IGNITION COIL RESISTANCE**

- Measure the ignition coil resistance in both the primary and secondary windings. If the windings are in sound condition, their resistance should be close to the specified values.

**Ignition coil resistance**
**Primary: 1–7 Ω (⊕ tap–⊖ tap)**
**Secondary: 18–28 kΩ (Spark plug cap–⊕ tap)**

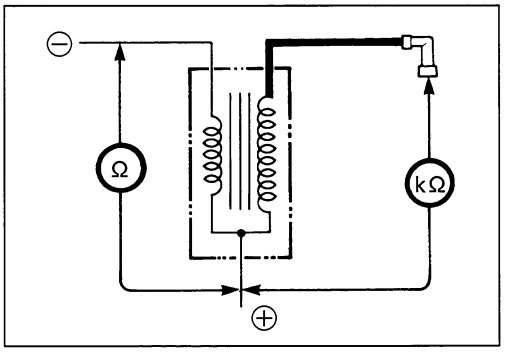

## SIGNAL GENERATOR PEAK VOLTAGE

- Remove the left side upper cover. (See p. 6-3.)

*NOTE:*
*Be sure that all of the couplers are connected properly and the battery is fully-charged.*

- Disconnect the ignitor coupler ① at the ignitor.

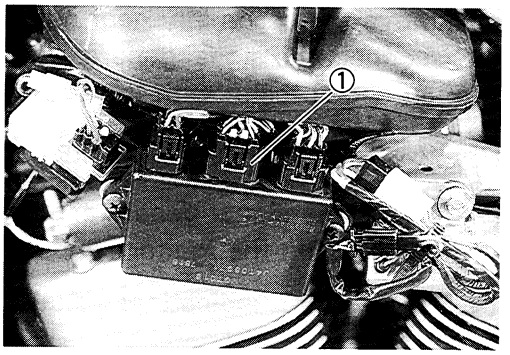


- Measure the signal generator peak voltage between the Green and Brown lead wires on the ignitor coupler.
- Connect the multi circuit tester with the peak voltage adaptor as follows.

Green (⊕ Probe)–Brown (⊖ Probe)

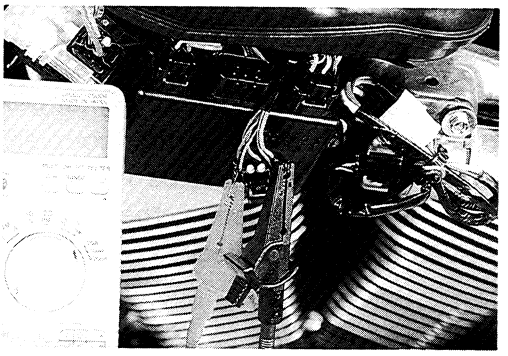

**TOOL 09900-25008: Multi circuit tester set**

*NOTE:*
* *When connecting the multi circuit tester, install a sting (O.D. is below 0.5 mm) to the back side of the ignitor coupler and connect the probes of tester to them.*
* *Use a sting, its outer diameter is below 0.5 mm, to prevent damaging the rubber of the water proof coupler.*

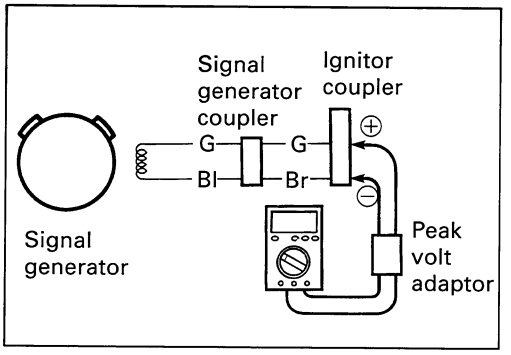


**⚠ CAUTION**

**When using the multi circuit tester and peak volt adaptor, refer to the appropriate instruction manual.**

- Shift the transmission into neutral, turn the ignition switch to the "ON" position and grasp the clutch lever.
- Press the starter button and allow the engine to crank for a few seconds, and then measure the signal generator peak voltage.
- Repeat the above procedure a few times and measure the highest signal generator peak voltage.

**Tester knob indication: Voltage ( ⎓ )**

**Specification**
**Signal generator peak voltage: More than 2.4 V (Green–Brown)**

If the peak voltage measured on the ignitor coupler is lower than the standard value, measure the peak voltage on the signal generator coupler as follows.

- Remove the secondary gear case cover. (See p. 3-7.)
- Disconnect the signal generator coupler and connect the multi circuit tester with the peak volt adaptor.

Green (⊕ Probe)–Blue (⊖ Probe)

- Measure the signal generator peak voltage in the same manner as on the ignitor coupler.

**Tester knob indication: Voltage ( ⎓ )**

**Specification**

**Signal generator peak voltage:**

**More than 2.4 V (Green–Blue)**

If the peak voltage on the signal generator lead wire couplers is ok but on the ignitor coupler is out of specification, the wire harness must be replaced. If both peak voltages are out of specification, the signal generator must be replaced and re-checked.

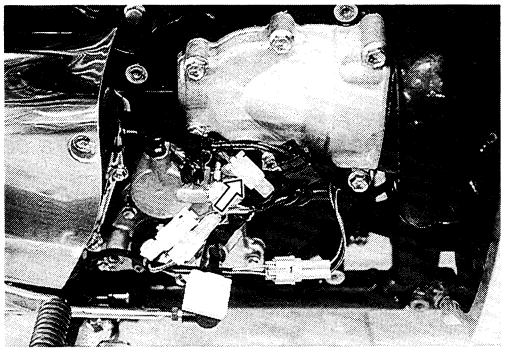

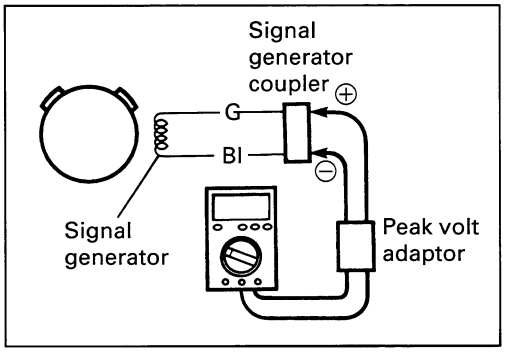


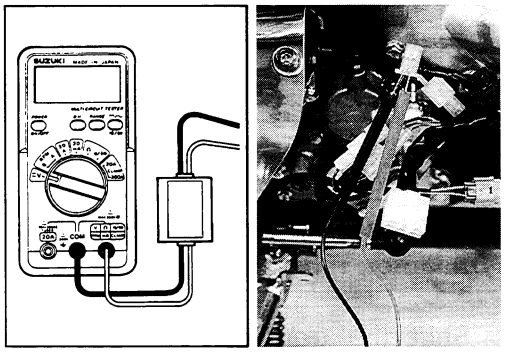

**SIGNAL GENERATOR**

- Remove the secondary gear case cover and disconnect the signal generator couplers.
- Measure the resistance between the lead wires and ground. If the resistance is not within the specified value, the signal generator stator must be replaced.

**Specification**

**Pickup coil resistance: 178–242Ω (Green–Blue)**

**∞ Ω (Blue–Ground)**

*NOTE:*

*Refer to the section 3D for signal generator replacement.*

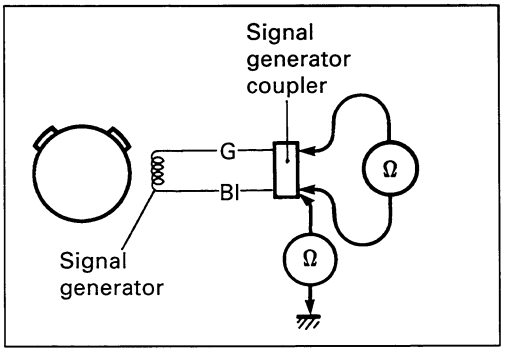

## MAP (BOOST) SENSOR INSPECTION

- Remove the right side upper cover. (See p. 6-3.)
- Disconnect MAP sensor coupler and hose.
- Remove the MAP sensor.

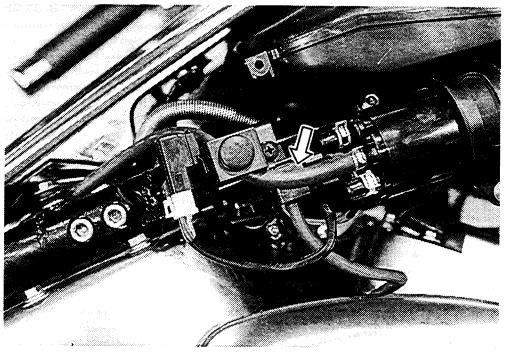

Connect the vacuum pump gauge to the air passage port of the MAP sensor.
Arrange 3 new 1.5V batteries in series (check that total voltage is 4.5–5.0 V) and connect ⊖ terminal to the ground terminal and ⊕ terminal to the Vcc terminal.

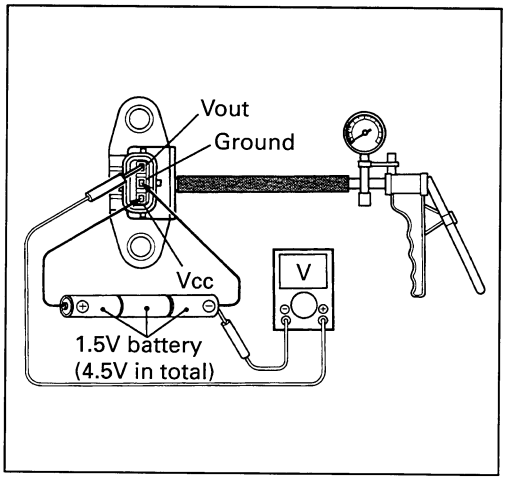


**TOOL 09917-47010: Vacuum pump gauge**
**09900-25008: Multi circuit tester set**

**Tester knob indication: Voltage ( ⎓ )**

Check the voltage between Vout and ground. Also, check if voltage reduces when vacuum is applied up to 400 mm Hg by using vacuum pump gauge.
If the voltage is not with in the specification, replace the boost sensor with a new one.

**Negative pressure: 400 mm Hg (53 kPa, 7.7 psi)**
**Vcc voltage: 4.5–5.0V**
**Ambient temp.: 20–30°C (68–86°F)**

**Output voltage:**

| ALTITUDE (Reference) | | ATMOSPHERIC PRESSURE | | **Output voltage** |
|---|---|---|---|---|
| (ft) | (m) | (mmHg) | kPa | (V) |
| 0 – 2 000 | 0 – 610 | 760 – 707 | 100 – 94 | **3.1–3.6** |
| 2 001 – 5 000 | 611 – 1 524 | Under 707 Over 634 | 94 – 85 | **2.8–3.4** |
| 5 001 – 8 000 | 1 525 – 2 438 | Under 634 Over 567 | 85 – 76 | **2.6–3.1** |
| 8 001 – 10 000 | 2 439 – 3 048 | Under 567 Over 526 | 76 – 70 | **2.4–2.9** |

# SPEEDOMETER

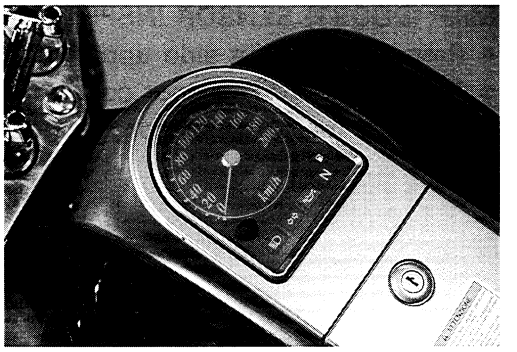

## REMOVAL

- Remove the meter and fuel inlet cover. (See pp. 6-3 and -4.)
- Remove the speedometer from the cover.

**⚠ CAUTION**

**Do not attempt to disassemble the speedometer. The speedometer is available only as an assembly.**

*NOTE:*
*The bulbs can be replaced after removing the rubber caps.*

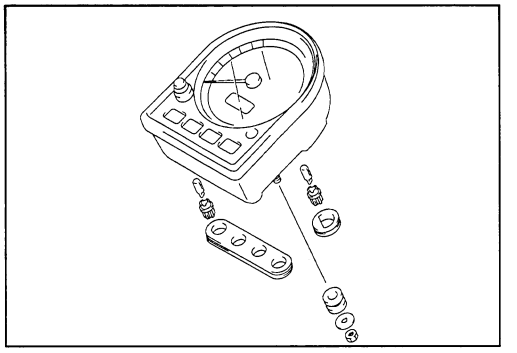

## INSPECTION

Using the tester, check the continuity between terminals in the following diagram. If the continuity measured is incorrect, remove and check the bulb.
If the bulb is failure, install the new bulb and check the continuity again. If the bulb is correct, replace the unit with a new one.

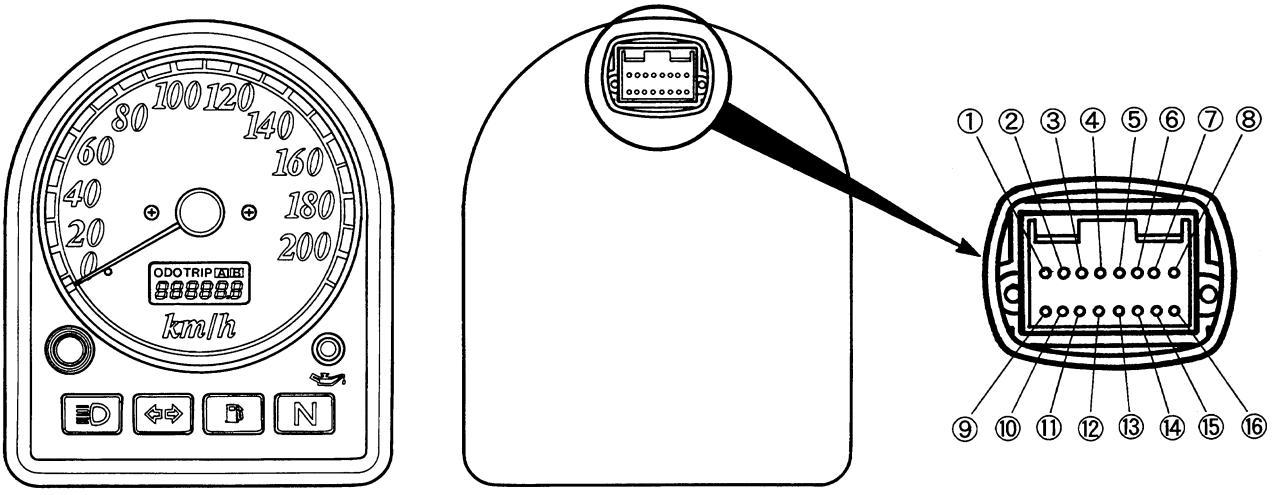


| ITEM | ⊕ Probe of tester to: | ⊖ Probe of tester to: |
|---|---|---|
| ILLUMINATION | ⑫ | ⑭ |
| TURN (R) | ⑭ | ⑦ |
| TURN (L) | ⑭ | ⑥ |
| NEUTRAL | ③ | ④ |
| HIGH BEAM | ⑤ | ⑭ |

| | |
|---|---|
| ① | GROUND |
| ② | FUEL |
| ③ | OIL ⊖ |
| ④ | NEUTRAL ⊖ |
| ⑤ | HIGH BEAM ⊕ |
| ⑥ | TURN (L) ⊕ |
| ⑦ | TURN (R) ⊕ |
| ⑧ | BATTERY ⊕ |
| ⑨ | SPEED SENSOR (SIGNAL) |
| ⑩ | |
| ⑪ | IGNITION ⊕ |
| ⑫ | ILLUMINATION ⊕ |
| ⑬ | |
| ⑭ | GROUND |
| ⑮ | |
| ⑯ | SPEED SENSOR ⊕ |

## FUEL LEVEL INDICATOR LIGHT INSPECTION

To test the fuel level indicator light, perform the following tests.

If either test detects a malfunctioning fuel indicator, replace speedometer.

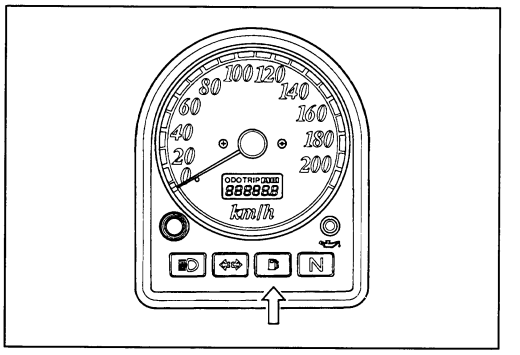


**Test 1**

- Check if the fuel level indicator lights up for three seconds when the ignition switch is turned ON.

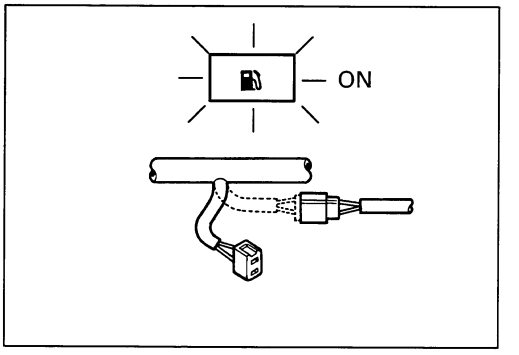


**Test 2**

- Remove the seat. (See p. 6-2.)
- Disconnect the fuel level gauge lead wire coupler.
- Turn the ignition switch ON.
- Check if the fuel level indicator lights up after 20 seconds.

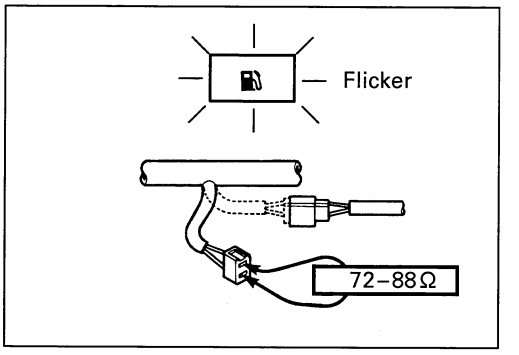


**Test 3**

- Connect a resistor (72–88 Ω) between Y/B and B/W lead coming from the main wiring harness and check if the fuel level indicator is flickering after 20 seconds.

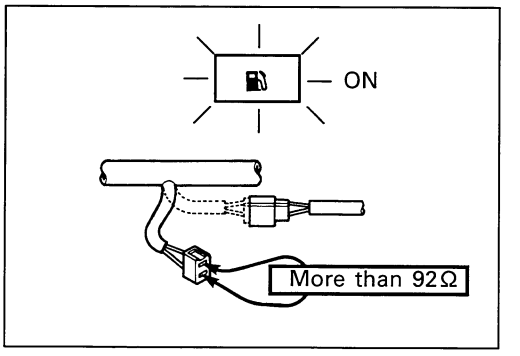


**Test 4**

- Replace a resistor (72–88 Ω) with a resistor (more than 92 Ω) and check if the fuel level indicator lights up after 20 seconds.

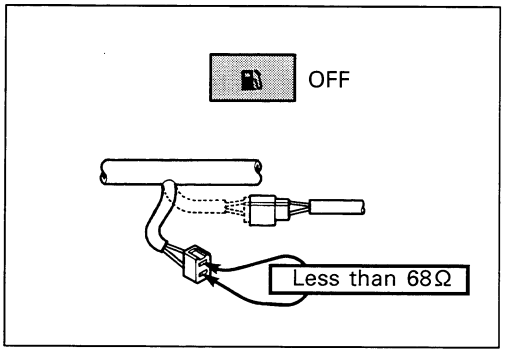


**Test 5**

- Replace a resister (more than 92 Ω) with a resister (less than 68 Ω) and check if the fuel level indicator go off after 20 seconds.

*NOTE:*

*The following table shows the relation between resistance and fuel level indicator.*

| Resistance | Fuel level indicator light |
|---|---|
| Less than 68 | OFF |
| 72 – 88 Ω | Flicker |
| More than 92 Ω | ON |

## FUEL LEVEL GAUGE INSPECTION

- Remove the seat. (See p. 6-2.)
- Remove the fuel level gauge. (See p. 5-6.)
- Measure the resistance at each fuel level gauge float position.
- If the resistance is incorrect, replace the fuel level gauge with a new one.

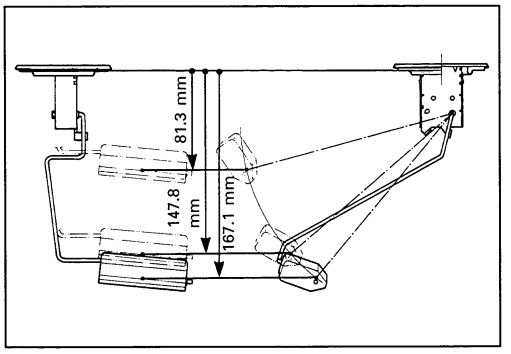


*NOTE:*
*The following table shows the relation between the float position of the fuel level gauge sending unit and the resistance.*

| Float position | Resistance |
|---|---|
| 81.3 mm (3.2 in) | 10–25 Ω |
| 147.8 mm (5.8 in) | 66–74 Ω |
| 167.1 mm (6.6 in) | 92–102 Ω |

## SPEEDOMETER INSPECTION

If the speedometer, odometer or trip meter does not function properly. Inspect the speed sensor and connection of couplers. If the speed sensor and connection is all right, replace the unit with a new one.

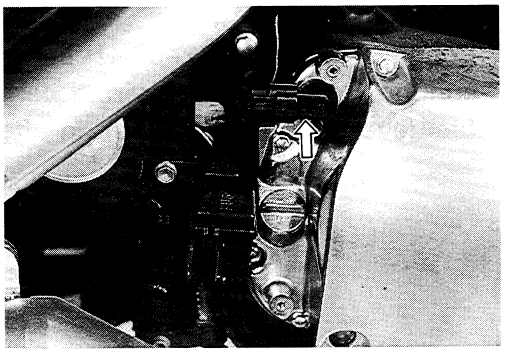

## SPEED SENSOR INSPECTION

- Remove the rear clutch cover.
- Disconnect the speed sensor lead wire coupler.
- Remove the speed sensor by removing its mounting bolt.
- Arrange 4 new 1.5V batteries in series (check that total voltage is 6.0–6.5V) and connect ⊖ terminal to ground terminal and ⊕ to the Vcc terminal.
- Connect 1kΩ resistor and the multi circuit tester as shown.

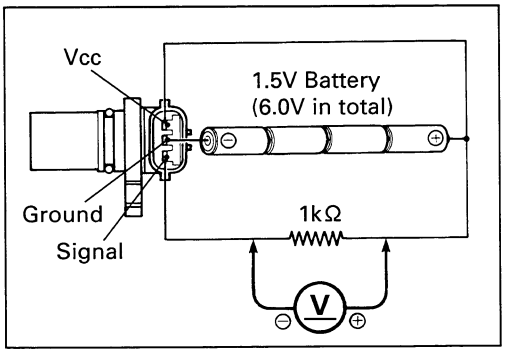


**TOOL 09900-25008: Multi circuit tester set**

**Tester knob indication: Voltage ( ⎓ )**

- Under above condition, when a suitable screwdriver touching the pick-up surface of the speed sensor moves, the tester reading voltage relatively changes (0V→6V or 6V→0V). If the tester reading voltage does not change, replace the speed sensor with a new one.

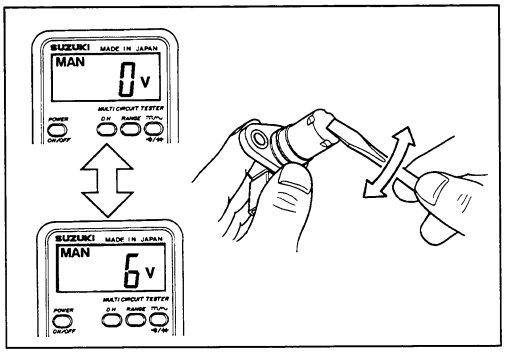


*NOTE:*
*The highest tester reading voltage (6V) while testing is same as the total voltage of 4 batteries.*

### OIL PRESSURE INDICATOR INSPECTION

- Disconnect the oil pressure Green/Yellow lead wire from the oil pressure switch.
- Turn the ignition switch on.
- Check if the oil pressure indicator lights up when grounding the Green/Yellow lead wire.

If the oil pressure indicator does not light up, check the couplers. If all of the connections are ok, replace the oil pressure indicator with a new one.

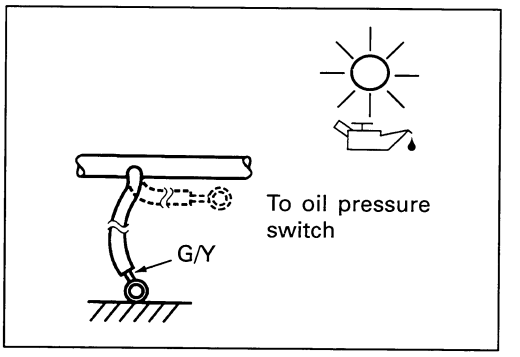


# RELAYS

## STARTER RELAY

The starter relay is located behind the left side upper cover. (See pp. 7-17 and -18.)

## AUTOMATIC DE-COMPRESSION RELAY

The automatic de-compression relay is right side upper cover. (See p. 7-20.)

## TURN SIGNAL SIDE-STAND RELAY

The turn signal relay is corporated with the side-stand relay and diode to form the one component part which is called the turn signal/side-stand relay.
It is located behind the rear clutch cover.

- Remove the rear clutch cover.

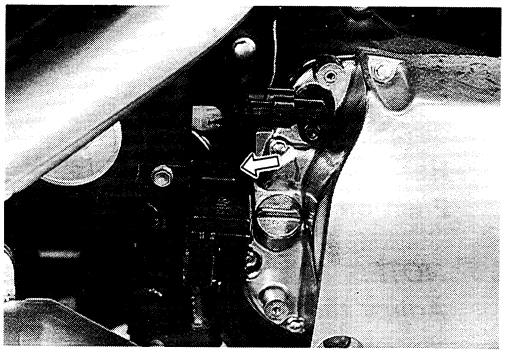

### INSPECTION

Before removing the turn signal/side-stand relay, check the operation of the turn signal light.
If the turn signal light does not light, inspect the bulb, turn signal switch and circuit connection.
If the bulb, turn signal switch and circuit connection checked are all right, the turn signal relay may be faulty, replace turn signal/side-stand relay with a new one.

*NOTE:*
*Be sure that the battery used is in fully-charged condition.*

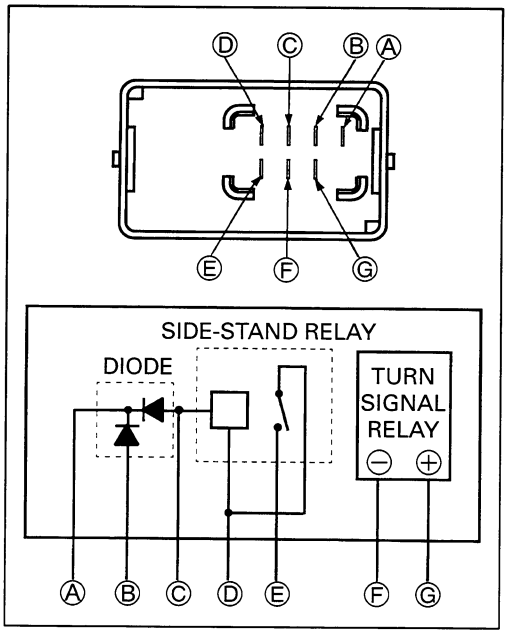

# LAMPS

## HEADLIGHT

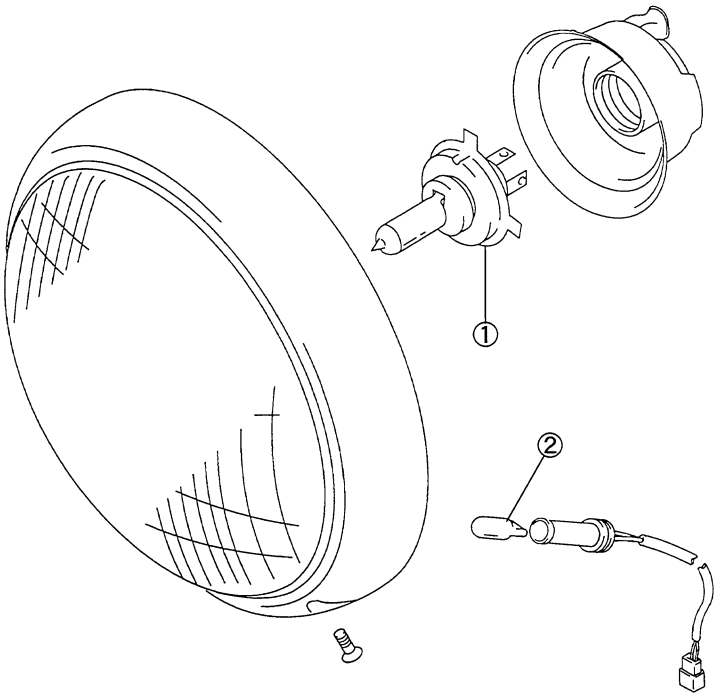


**Headlight bulb ①: 12V 60/55W**
**Position light bulb ②: 12V 4W (Except for E-03, -24, -28 and -33)**

*NOTE:*
*Adjust the headlight, both vertical and horizontal, after reassembling.*

### BULB REPLACEMENT

- Remove the headlight.
- Disconnect the socket ① and remove the rubber cap ②.
- Remove the bulb by removing the bulb holder spring.
- Remove the position light bulb ③. (Except for E-03, -24, -28 and -33)
- Reassemble the bulb in the reverse order of removal.

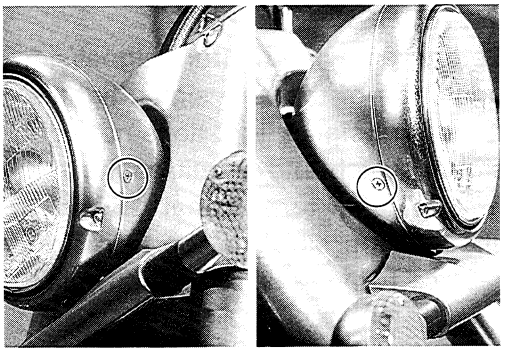

**⚠ CAUTION**

**If you touch the bulb with your bare hands, clean the bulb with a cloth moistened with alcohol or soapy water to prevent premature bulb failure.**

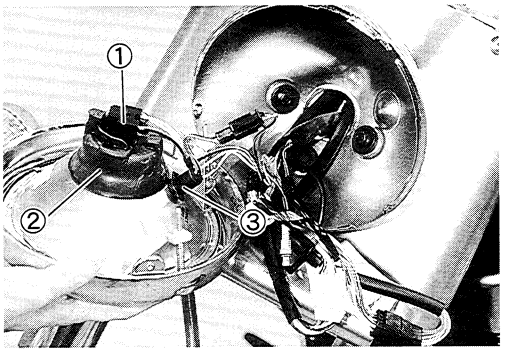

## BRAKE LIGHT/TAILLIGHT

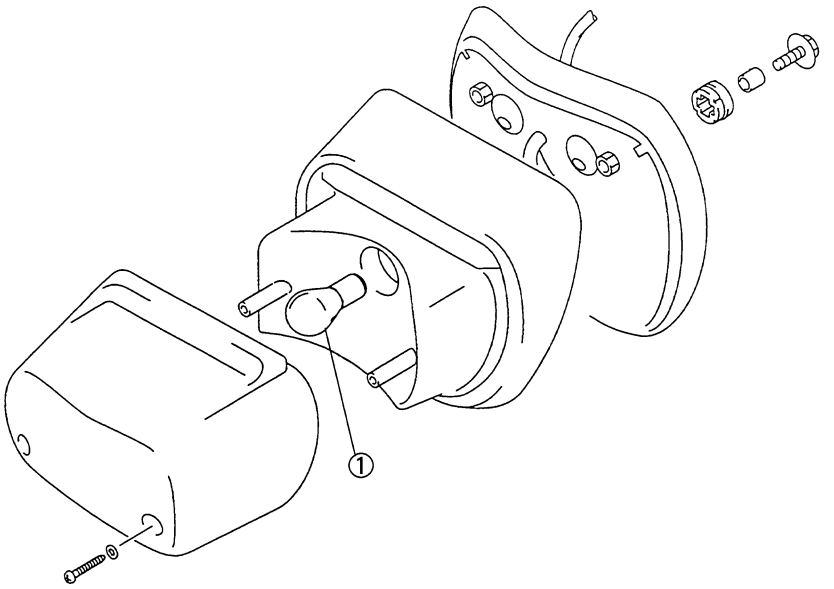


**Brake light/Taillight bulb ①: 12V 21/5W**

**⚠ CAUTION**

**If you touch the bulb with your bare hands, clean the bulb with a cloth moistened with alcohol or soapy water to prevent premature bulb failure.**

## TURN SIGNAL LIGHTS

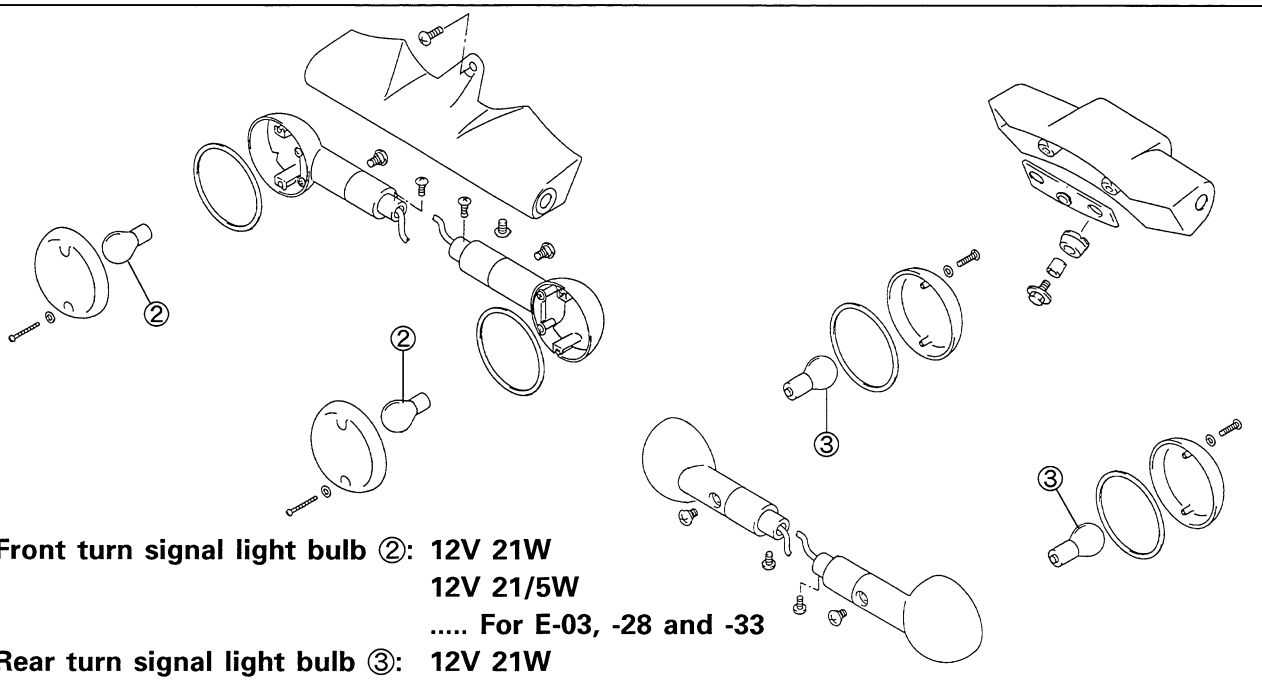


**Front turn signal light bulb ②: 12V 21W**
**12V 21/5W**
**..... For E-03, -28 and -33**
**Rear turn signal light bulb ③: 12V 21W**

**⚠ CAUTION**

**Do not overtighten the lens fitting screws.**
**If you touch the bulb with your bare hands, clean the bulb with a cloth moistened with alcohol or soapy water to prevent premature bulb failure.**

# SWITCHES

Inspect each switch for continuity with a tester. If any abnormality is found, replace the respective switch assemblies with new ones.

### IGNITION SWITCH

**(For Australia)**

| Position \ Color | R | O | O/Y | Gr | Br |
|---|---|---|---|---|---|
| OFF | | | | | |
| ON | ○ | ○ | ○ | ○ | ○ |

**(For Others)**

| Position \ Color | R | O | O/Y | Gr | Br |
|---|---|---|---|---|---|
| OFF | | | | | |
| ON | ○ | ○ | ○ | ○ | ○ |
| P | ○ | | | | ○ |

### LIGHTING SWITCH

**(Except for Australia, Canada and U.S.A.)**

| Position \ Color | O/Bl | Gr | O/R | Y/W |
|---|---|---|---|---|
| OFF | | | | |
| • | ○ | ○ | | |
| ON | ○ | ○ | ○ | ○ |

### DIMMER SWITCH

| Position \ Color | Y/W | W | Y |
|---|---|---|---|
| Hl | ○ | | ○ |
| LO | ○ | ○ | |

### TURN SIGNAL SWITCH

| Position \ Color | Lg | Lbl | B |
|---|---|---|---|
| L | | ○ | ○ |
| PUSH | | | |
| R | ○ | ○ | |

### PASSING LIGHT SWITCH

**(Except for Canada and U.S.A.)**

| Position \ Color | O/R | Y |
|---|---|---|
| • | | |
| PUSH | ○ | ○ |

### ENGINE STOP SWITCH

| Position \ Color | O/B | O/W |
|---|---|---|
| OFF | | |
| RUN | ○ | ○ |

### STARTER BUTTON

| Position \ Color | O/W | Y/G |
|---|---|---|
| • | | |
| PUSH | ○ | ○ |

### HORN BUTTON

| Position \ Color | B/Bl | B/W |
|---|---|---|
| • | | |
| PUSH | ○ | ○ |

### FRONT BRAKE SWITCH

| Position \ Color | B/Bl | B/R |
|---|---|---|
| OFF | | |
| ON | ○ | ○ |

### REAR BRAKE LIGHT SWITCH

| Position \ Color | O | W/B |
|---|---|---|
| OFF | | |
| ON | ○ | ○ |

### CLUTCH LEVER POSITION SWITCH

| Position \ Color | B/Y | B/Y |
|---|---|---|
| OFF | | |
| ON | ○ | ○ |

### OIL PRESSURE SWITCH

| Position \ Color | G/Y | Ground |
|---|---|---|
| ON (engine is stopped) | ○ | ○ |
| OFF (engine is running) | | |

*NOTE: Before inspecting the oil pressure switch, check if the engine oil level is enough. (Refer to page 2-6.)*

**WIRE COLOR**

| | | | | | |
|---|---|---|---|---|---|
| **B** | **: Black** | **Lbl** | **: Light blue** | **R** | **: Red** |
| **Br** | **: Brown** | **Lg** | **: Light green** | **Y** | **: Yellow** |
| **Gr** | **: Gray** | **O** | **: Orange** | **W** | **: White** |

**B/Bl : Black with Blue tracer**
**B/W : Black with White tracer**
**B/Y : Black with Yellow tracer**
**B/R : Black with Red tracer**
**G/Y : Green with Yellow tracer**
**O/B : Orange with Black tracer**
**O/Bl : Orange with Blue tracer**
**O/R : Orange with Red tracer**
**O/W : Orange with White tracer**
**O/Y : Orange with Yellow tracer**
**W/B : White with Black tracer**
**Y/G : Yellow with Green tracer**
**Y/W : Yellow with White tracer**

# BATTERY

## SPECIFICATIONS

| | |
|---|---|
| Type designation | FTH16-BS-1 |
| Capacity | 12V, 50.4 kC (14 Ah)/10HR |
| Standard electrolyte S.G. | 1.320 at 20°C (68°F) |

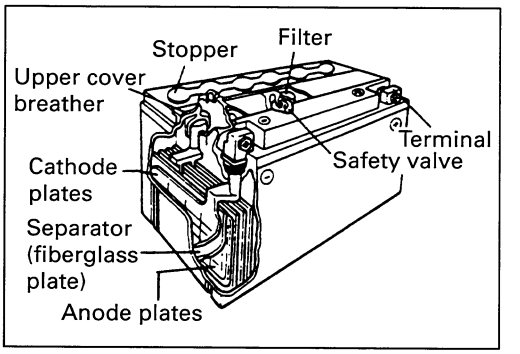


## INITIAL CHARGING

**Filling electrolyte**

- Remove the aluminum tape ① sealing the battery electrolyte filler holes.

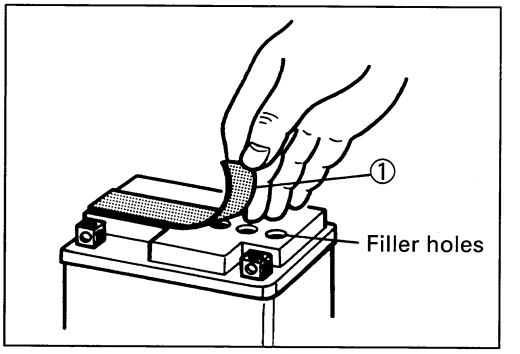


- Remove the caps ②.

*NOTE:*

* *After filling the electrolyte completely, use the removed cap ② as the sealed caps of battery-filler holes.*

* *Do not remove or pierce the sealed areas ③ of the electrolyte container.*

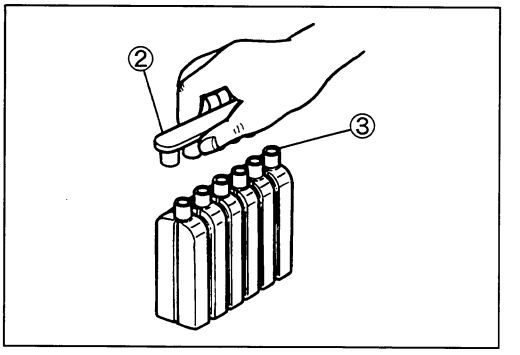


- Insert the nozzles of the electrolyte container into the battery's electrolyte filler holes, holding the container firmly so that it does not fall. Take precaution not to allow any of the fluid to spill.

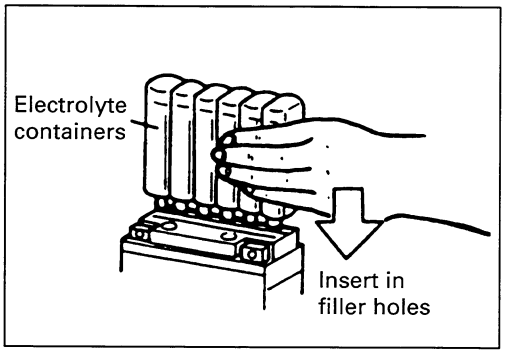


- Make sure air bubbles are coming up each electrolyte container, and leave in this position for about more than 20 minutes.

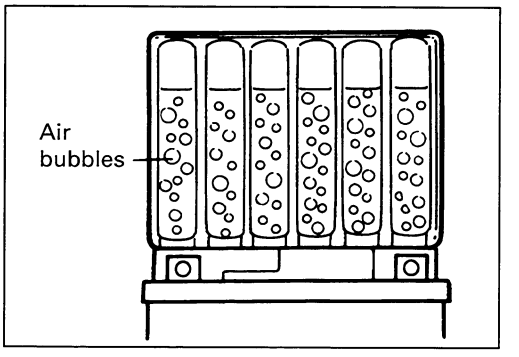

*NOTE:*
*If no air bubbles are coming up from a filler port, tap the bottom of the two or three times.*
*Never remove the container from the battery.*

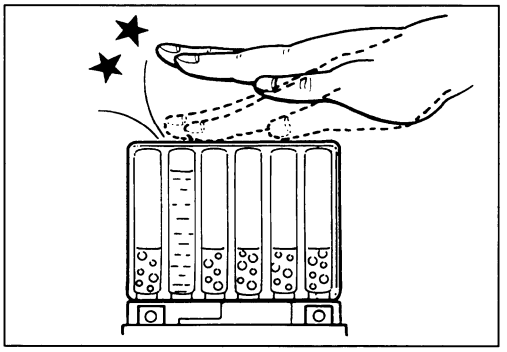

- After confirming that the electrolyte has entered the battery completely, remove the electrolyte containers from the battery. Wait for around 20 minutes.
- Insert the caps into the filler holes, pressing in firmly so that the top of the caps do not protrude above the upper surface of the battery's top cover.

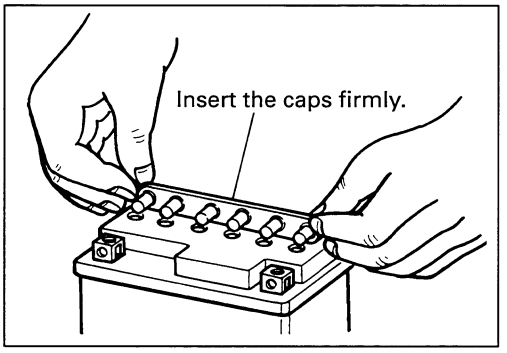


**⚠ CAUTION**

- **Never use anything except the specified battery.**
- **Once install the caps to the battery; do not remove the caps.**

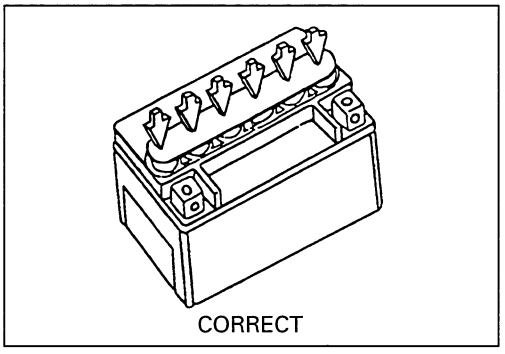
CORRECT

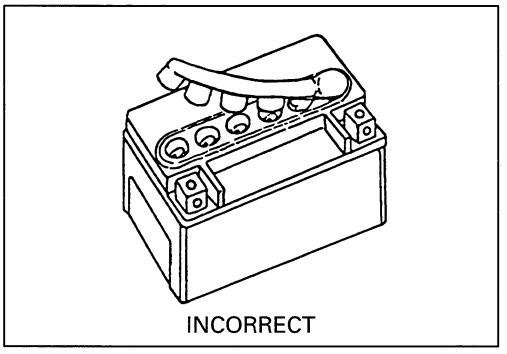
INCORRECT

- Using multi circuit tester, measure the battery voltage. The tester should indicate more than 12.5–12.6V (DC) as shown in the Fig. If the battery voltage is lower than the specification, charge the battery with a battery charger. (Refer to the recharging operation.)

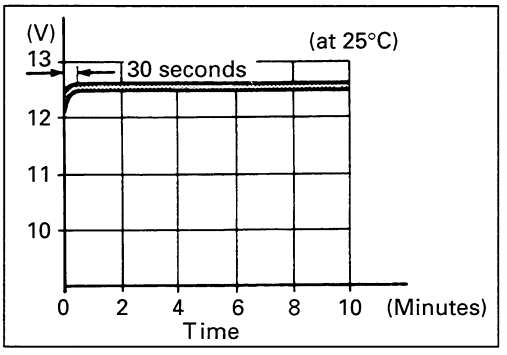


*NOTE:*
*Initial charging for a new battery is recommended if two years have elapsed since the date of manufacture.*

## SERVICING

Visually inspect the surface of the battery container. If any signs of cracking or electrolyte leakage from the sides of the battery have occurred, replace the battery with a new one. If the battery terminals are found to be coated with rust or an acidic white powdery substance, then this can be cleaned away with sandpaper.

## RECHARGING OPERATION

- Using the multi circuit tester, check the battery voltage. If the voltage reading is less than the 12.0V (DC), recharge the battery with a battery charger.

**⚠ CAUTION**

**When recharging the battery, remove the battery from the motorcycle.**

*NOTE:*
*Do not remove the caps on the battery top while recharging.*

**Recharging time: 7A for one hour or 1.4A for 5 to 10 hours**

**⚠ CAUTION**

**Be careful not to permit the charging current to exceed 7A at any time.**

- After recharging, wait for more than 30 minutes and check the battery voltage with a multi circuit tester.
- If the battery voltage is less than the 12.5V, recharge the battery again.
- If battery voltage is still less than 12.5V, after recharging, replace the battery with a new one.
- When the motorcycle is not used for a long period, check the battery every 1 month to prevent the battery discharge.

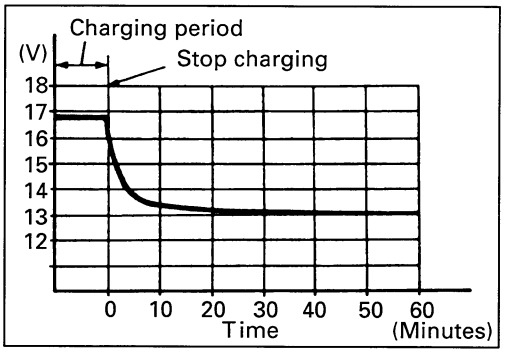


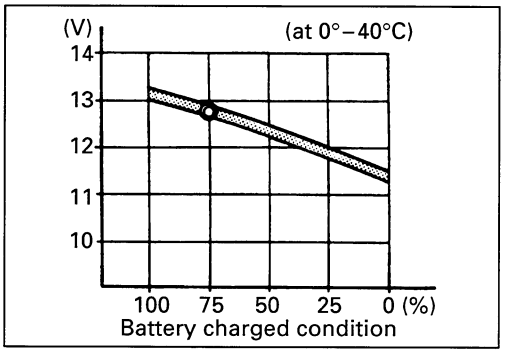

# SERVICING INFORMATION

CONTENTS


TROUBLESHOOTING ..... 8- 1
ENGINE ..... 8- 1
SHAFT DRIVE ..... 8- 4
CARBURETOR ..... 8- 5
CHASSIS ..... 8- 5
BRAKES ..... 8- 6
ELECTRICAL ..... 8- 7
BATTERY ..... 8- 8
WIRING DIAGRAM ..... 8- 9
WIRE HARNESS, CABLE AND HOSE ROUTING ..... 8-12
WIRE HARNESS ROUTING ..... 8-12
CABLE ROUTING ..... 8-15
FUEL SYSTEM HOSE ROUTING ..... 8-16
FRONT BRAKE HOSE ROUTING ..... 8-17
REAR BRAKE HOSE ROUTING ..... 8-18
OIL HOSE ROUTING ..... 8-18
PAIR (AIR SUPPLY) SYSTEM HOSE ROUTING ..... 8-19
ENGINE SIDE BOX ..... 8-19
UPPER COVERS, METER AND FUEL INLET COVER SET-UP ..... 8-20
FRAME HEAD AND FRAME COVER CUSHION ..... 8-21
FRAME COVER SHIELD ..... 8-21
BRAKE LIGHT/TAILLIGHT SET-UP ..... 8-22
SPECIAL TOOLS ..... 8-23
TIGHTENING TORQUE ..... 8-26
ENGINE ..... 8-26
SECONDARY AND FINAL ..... 8-27
CHASSIS ..... 8-28
TIGHTENING TORQUE CHART ..... 8-29
SERVICE DATA ..... 8-30

# TROUBLESHOOTING

## ENGINE

| Complaint | Symptom and possible causes | Remedy |
|---|---|---|
| **Engine will not start, or is hard to start.** | **Compression too low** | |
| | 1. Worn cylinder. | Rebore or replace. |
| | 2. Worn piston ring. | Replace. |
| | 3. Worn valve guide or improper valve seating. | Repair or replace. |
| | 4. Loose spark plug. | Tighten. |
| | 5. Broken, cracked or damaged piston. | Replace. |
| | 6. Slow cranking starter motor. | See electrical section. |
| | 7. Mistimed valves. | Adjust. |
| | 8. Defective lash adjuster. | Replace. |
| | 9. Trapped air in lash adjuster. | Bleed. |
| | 10. Defective automatic de-compression solenoid or relay. | Replace. |
| | 11. Automatic de-compression cables out of adjustment. | Adjust. |
| | 12. Defective ignitor. | Replace. |
| | **Spark plug not sparking** | |
| | 1. Damaged spark plug. | Replace. |
| | 2. Damaged spark plug cap. | Replace. |
| | 3. Fouled spark plug. | Clean or replace. |
| | 4. Wet spark plug. | Clean and dry or replace. |
| | 5. Defective ignition coil. | Replace. |
| | 6. Open or short in high-tension cord. | Replace. |
| | 7. Defective signal generator. | Replace. |
| | 8. Defective ignitor. | Replace. |
| | **No fuel reaching the carburetor** | |
| | 1. Clogged fuel tank breather hose. | Clean or replace. |
| | 2. Clogged or defective TPC valve and the fuel vapor separator/fuel shut-off valve. | Replace. |
| | 3. Defective needle valve. | Replace with needle valve seat. |
| | 4. Clogged fuel hose. | Clean or replace. |
| | 5. Clogged fuel filter. | Clean or replace. |
| | 6. Defective fuel pump. | Replace. |
| | 7. Defective ignitor. | Replace. |
| **Engine stalls easily.** | 1. Fouled spark plug. | Clean or replace. |
| | 2. Defective signal generator. | Replace. |
| | 3. Defective ignitor. | Replace. |
| | 4. Clogged fuel hose. | Clean. |
| | 5. Clogged carburetor jet. | Clean. |
| | 6. Defective fuel pump. | Replace. |
| | 7. Defective lash adjuster. | Replace. |
| | 8. Defective ignition coil. | Replace. |

| Complaint | Symptom and possible causes | Remedy |
|---|---|---|
| **Engine is noisy.** | **Excessive valve chatter** | |
| | 1. Trapped air in lash adjuster. | Bleed. |
| | 2. Defective lash adjuster. | Replace. |
| | 3. Automatic de-compression cable out of adjustment. | Adjust. |
| | 4. Weak or broken valve spring. | Replace. |
| | 5. Worn rocker arm or rocker arm shaft. | Replace. |
| | 6. Worn or burnt camshaft journal. | Replace. |
| | **Noise seems to come from piston** | |
| | 1. Worn piston. | Replace. |
| | 2. Worn cylinder. | Rebore or replace. |
| | 3. Carbon build-up in combustion chamber. | Clean. |
| | 4. Worn piston pin or piston pin bore. | Replace. |
| | 5. Worn piston ring or ring groove. | Replace. |
| | **Noise seems to come from timing chain** | |
| | 1. Stretched cam chain. | Replace cam chain and sprockets. |
| | 2. Worn cam chain sprocket. | Replace cam chain and sprockets. |
| | 3. Improperly working cam chain tensioner. | Repair or replace. |
| | **Noise seems to come from clutch** | |
| | 1. Worn countershaft spline. | Replace countershaft. |
| | 2. Worn clutch hub spline. | Replace clutch hub. |
| | 3. Worn clutch plate teeth. | Replace clutch plate. |
| | 4. Distorted clutch plate. | Replace. |
| | 5. Worn clutch release bearing. | Replace. |
| | 6. Weak clutch damper. | Replace primary driven gear. |
| | **Noise seems to come from crankshaft** | |
| | 1. Rattling bearing. | Replace. |
| | 2. Worn or burnt crank pin bearing. | Replace. |
| | 3. Worn or burnt journal bearing. | Replace. |
| | 4. Excessive thrust clearance. | Replace thrust bearing. |
| | **Noise seems to come from transmission** | |
| | 1. Worn or rubbing gear. | Replace. |
| | 2. Worn countershaft spline. | Replace countershaft. |
| | 3. Worn driveshaft spline. | Replace driveshaft. |
| | 4. Worn or rubbing primary gear. | Replace. |
| | 5. Worn bearing. | Replace. |
| **Clutch slips.** | 1. Defective back torque limiter. | Replace. |
| | 2. Weak or broken clutch spring. | Replace. |
| | 3. Worn or distorted clutch pressure plate. | Replace. |
| | 4. Distorted clutch plate. | Replace. |
| **Clutch drags.** | 1. Clutch out of adjustment. | Adjust. |
| | 2. Some clutch springs are weak, while others are not. | Replace. |
| | 3. Worn or distorted clutch pressure plate. | Replace. |
| | 4. Distorted clutch plate or pressure plate. | Replace. |

| Complaint | Symptom and possible causes | Remedy |
|---|---|---|
| **Transmission will not shift.** | 1. Broken gearshift cam.<br>2. Distorted gearshift fork.<br>3. Broken gearshift cam plate. | Replace.<br>Replace.<br>Replace. |
| **Transmission will not shift back.** | 1. Broken gearshift shaft return spring.<br>2. Rubbing or stick gearshift shaft.<br>3. Worn or distorted gearshift fork.<br>4. Broken gearshift cam plate. | Replace.<br>Repair or replace.<br>Replace.<br>Replace. |
| **Transmission jumps out of gear.** | 1. Worn gear.<br>2. Worn or distorted gearshift fork.<br>3. Weakened gearshift cam stopper spring.<br>4. Broken gearshift cam plate. | Replace.<br>Replace.<br>Replace.<br>Replace. |
| **Engine idles poorly.** | 1. Trapped air in lash adjuster.<br>2. Improper valve seating.<br>3. Worn valve guide.<br>4. Worn rocker arm or rocker arm shaft.<br>5. Excessive spark plug gap.<br>6. Defective ignition coil.<br>7. Defective signal generator.<br>8. Defective ignitor.<br>9. Incorrect float chamber fuel level.<br>10. Clogged carburetor jet.<br>11. Carburetors not synchronized.<br>12. Defective lash adjuster.<br>13. Defective fuel pump. | Bleed.<br>Repair or replace.<br>Replace.<br>Replace.<br>Adjust or replace.<br>Replace.<br>Replace.<br>Replace.<br>Adjust float height.<br>Clean.<br>Synchronize.<br>Replace.<br>Replace. |
| **Engine runs poorly in high-speed range.** | 1. Weak valve spring.<br>2. Worn camshaft.<br>3. Insufficient spark plug gap.<br>4. Mistimed valves.<br>5. Ignition not advanced sufficiently due to poorly working timing advance circuit.<br>6. Defective ignition coil.<br>7. Defective signal generator.<br>8. Defective ignitor.<br>9. Low float chamber fuel level.<br>10. Dirty air cleaner element.<br>11. Clogged fuel hose, resulting in inadequate fuel supply to carburetor.<br>12. Trapped air in lash adjuster.<br>13. Defective fuel pump. | Replace.<br>Replace.<br>Regap or replace.<br>Adjust.<br>Replace ignitor.<br>Replace.<br>Replace.<br>Replace.<br>Adjust float height.<br>Clean or replace.<br>Clean and prime.<br>Bleed.<br>Replace. |
| **Exhaust smoke is dirty or thick.** | 1. Excessive amount of engine oil.<br>2. Worn cylinder.<br>3. Worn piston ring.<br>4. Worn valve guide.<br>5. Scored or scuffed cylinder wall.<br>6. Worn valve stem.<br>7. Defective valve stem oil seal.<br>8. Worn oil ring side rail. | Check level and drain.<br>Rebore or replace.<br>Replace.<br>Replace.<br>Rebore or replace.<br>Replace valve.<br>Replace.<br>Replace oil ring. |

| Complaint | Symptom and possible causes | Remedy |
|---|---|---|
| **Engine lacks power.** | 1. Insufficient valve stem clearance.<br>2. Weak valve spring.<br>3. Mistimed valves.<br>4. Worn cylinder.<br>5. Worn piston ring.<br>6. Improper valve seating.<br>7. Fouled spark plug.<br>8. Incorrect spark plug.<br>9. Clogged carburetor jet.<br>10. Incorrect float chamber fuel level.<br>11. Dirty air cleaner element.<br>12. Loose throttle valve synchronizing screw.<br>13. Air leakage from intake pipe.<br>14. Excessive amount of engine oil.<br>15. Defective ignition coil.<br>16. Defective ignitor.<br>17. Defective signal generator.<br>18. Defective fuel pump. | Adjust.<br>Replace.<br>Adjust.<br>Rebore or replace.<br>Replace.<br>Repair or replace.<br>Clean or replace.<br>Replace.<br>Clean.<br>Adjust float height.<br>Clean or replace.<br>Tighten.<br>Tighten or replace.<br>Check level and drain.<br>Replace.<br>Replace.<br>Replace.<br>Replace. |
| **Engine overheats.** | 1. Carbon build-up on piston crown.<br>2. Insufficient amount of engine oil.<br>3. Defective oil pump.<br>4. Clogged oil circuit.<br>5. Float chamber fuel level too low.<br>6. Air leakage from intake pipe.<br>7. Incorrect engine oil. | Clean.<br>Check level and add.<br>Replace.<br>Clean.<br>Adjust float height.<br>Tighten or replace.<br>Change. |

## SHAFT DRIVE

| Complaint | Symptom and possible causes | Remedy |
|---|---|---|
| **Shaft drive is noisy.** | **Noise seems to come from secondary bevel gear and final bevel gear assemblies.**<br>1. Insufficient amount of engine oil.<br>2. Damaged or worn drive and driven bevel gears.<br>3. Excessive backlash.<br>4. Improper tooth contact.<br>5. Damage to bearings.<br>6. Weakened damper spring.<br>7. Damaged or worn cam dog contacting surface.<br><br>**Noise seems to come from propeller shaft area.**<br>1. Damaged propeller shaft universal joint.<br>2. Damaged or worn propeller shaft splines.<br>3. Insufficient lubricant. | <br>Check level and add.<br>Replace.<br>Adjust.<br>Adjust.<br>Replace.<br>Replace.<br>Replace.<br><br><br>Replace.<br>Replace.<br>Apply. |
| **No power transmitted from engine to rear wheel.** | 1. Broken propeller shaft.<br>2. Broken gear teeth.<br>3. Broken or damaged input/output cam dog.<br>4. Weakened damper spring. | Replace.<br>Replace.<br>Replace.<br>Replace. |
| **Secondary bevel gear and final bevel gear assemblies oil leak.** | 1. Damage to oil seals.<br>2. Damage to O-rings.<br>3. Loose bolts on secondary gear and final gear bearing case. | Replace.<br>Replace.<br>Retighten. |

## CARBURETOR

| Complaint | Symptom and possible causes | Remedy |
|---|---|---|
| **Starting difficulty.** | 1. Clogged starter jet.<br>2. Clogged starter jet passage.<br>3. Air leaking from joint between starter body and carburetor.<br>4. Air leaking from carburetor joint or vacuum hose joint.<br>5. Improperly working starter (enricher) plunger. | Clean.<br>Clean.<br>Tighten, adjust or replace gasket.<br>Tighten or replace defective part.<br>Adjust. |
| **Idling or lows-peed trouble.** | 1. Clogged or loose pilot jet.<br>2. Clogged or loose pilot air jet.<br>3. Air leaking from carburetor joint, vacuum pipe joint, or starter.<br>4. Clogged pilot outlet port.<br>5. Clogged bypass port.<br>6. Starter (enricher) plunger not fully closed. | Clean or tighten.<br>Clean or tighten.<br>Tighten or replace defective part.<br>Clean.<br>Clean.<br>Adjust. |
| **Medium-or high speed trouble.** | 1. Clogged main jet.<br>2. Clogged main air jet.<br>3. Clogged needle jet.<br>4. Improperly working throttle valve.<br>5. Clogged fuel filter.<br>6. Carburetors not synchronized. | Clean.<br>Clean.<br>Clean.<br>Adjust.<br>Clean or replace.<br>Synchronize. |
| **Overflow and fuel level fluctuations.** | 1. Worn or damaged needle valve.<br>2. Broken needle valve spring.<br>3. Improperly working float.<br>4. Foreign matter on the needle valve.<br>5. Incorrect float chamber fuel level.<br>6. Defective fuel pump.<br>7. Defective ignitor. | Replace.<br>Replace.<br>Adjust or replace.<br>Clean or replace with needle valve seat.<br>Adjust float height.<br>Replace.<br>Replace. |

## CHASSIS

| Complaint | Symptom and possible causes | Remedy |
|---|---|---|
| **Steering is heavy.** | 1. Overtightened steering stem nut.<br>2. Broken bearing/race in steering stem.<br>3. Distorted steering stem.<br>4. Low tire pressure. | Adjust.<br>Replace.<br>Replace.<br>Regulate. |
| **Handlebars wobbles.** | 1. Loss of balance between right and left front forks.<br>2. Distorted front fork.<br>3. Distorted front axle.<br>4. Twisted tire.<br>5. Worn bearing/race in steering stem. | Adjust or replace.<br>Repair or replace.<br>Replace.<br>Replace.<br>Replace. |
| **Front wheel wobbles.** | 1. Distorted wheel rim.<br>2. Worn front wheel bearing.<br>3. Defective or incorrect tire.<br>4. Loose front axle.<br>5. Loose front axle pinch bolt.<br>6. Incorrect fork oil level. | Replace.<br>Replace.<br>Replace.<br>Tighten.<br>Tighten.<br>Adjust. |

| Complaint | Symptom and possible causes | Remedy |
|---|---|---|
| **Front suspension too soft.** | 1. Weak spring.<br>2. Insufficient fork oil.<br>3. Wrong weight fork oil. | Replace.<br>Check level and add.<br>Replace. |
| **Front suspension too stiff.** | 1. Excessively viscous fork oil.<br>2. Excessively fork oil.<br>3. Bent front axle. | Replace.<br>Check level and drain.<br>Replace. |
| **Front suspension noisy.** | 1. Insufficient fork oil.<br>2. Loose front suspension fastener. | Check level and add.<br>Tighten. |
| **Rear wheel wobbles.** | 1. Distorted wheel rim.<br>2. Worn rear wheel bearing.<br>3. Defective or incorrect tire.<br>4. Worn swingarm bearing.<br>5. Worn rear suspension bearing.<br>6. Loose rear suspension fastener. | Replace.<br>Replace.<br>Replace.<br>Replace.<br>Replace.<br>Tighten. |
| **Rear suspension too soft.** | 1. Weak rear shock absorber spring.<br>2. Rear shock absorber leaks oil.<br>3. Improperly suspension setting. | Replace.<br>Replace.<br>Adjust. |
| **Rear suspension too stiff.** | 1. Improperly adjusted rear suspension.<br>2. Bent rear shock absorber shaft.<br>3. Bent swingarm.<br>4. Worn swingarm and rear suspension related bearings. | Adjust.<br>Replace.<br>Replace.<br>Replace. |
| **Rear suspension noisy.** | 1. Loose rear suspension fastener.<br>2. Worn rear suspension bearing.<br>3. Worn swingarm bearing. | Tighten.<br>Replace.<br>Replace. |

## BRAKES

| Complaint | Symptom and possible causes | Remedy |
|---|---|---|
| **Brake power insufficient.** | 1. Leakage of brake fluid.<br>2. Worn brake pad.<br>3. Oil on brake pad surface.<br>4. Worn brake disc.<br>5. Air in hydraulic system.<br>6. Insufficient brake fluid. | Repair or replace.<br>Replace.<br>Clean brake disc and pads.<br>Replace.<br>Bleed.<br>Add. |
| **Brake squeaks.** | 1. Carbon adhesion on brake pad surface.<br>2. Tilted brake pad.<br>3. Damaged wheel bearing.<br>4. Worn brake pad.<br>5. Foreign material in brake fluid.<br>6. Clogged return port of master cylinder.<br>7. Loosen front or rear axle. | Clean surface with sandpaper.<br>Readjust brake pad position or replace.<br>Replace.<br>Replace.<br>Change brake fluid.<br>Disassemble and clean master cylinder.<br>Tighten. |
| **Brake lever or pedal stroke excessive.** | 1. Air in hydraulic system.<br>2. Insufficient brake fluid.<br>3. Improper brake fluid. | Bleed.<br>Check level and add.<br>Bleed any air.<br>Change. |

| Complaint | Symptom and possible causes | Remedy |
|---|---|---|
| **Brake fluid leaks.** | 1. Loosen connection joint.<br>2. Cracked hose.<br>3. Worn piston seal.<br>4. Worn secondary cup. | Tighten.<br>Replace.<br>Replace.<br>Replace. |
| **Brake drags.** | 1. Rusty part.<br>2. Insufficient brake lever or brake pedal pivot lubrication. | Clean and lubricate.<br>Lubricate. |

## ELECTRICAL

| Complaint | Symptom and possible causes | Remedy |
|---|---|---|
| **No sparking or poor sparking.** | 1. Defective ignition coil.<br>2. Defective spark plug.<br>3. Defective signal generator.<br>4. Defective ignitor. | Replace.<br>Replace.<br>Replace.<br>Replace. |
| **Spark plug is wet or quickly becomes fouled with carbon.** | 1. Excessively rich air/fuel mixture.<br>2. Excessively high idling speed.<br>3. Incorrect gasoline.<br>4. Dirty air cleaner element.<br>5. Incorrect spark plug (cold type). | Adjust carburetor.<br>Adjust carburetor.<br>Change.<br>Clean or replace.<br>Change to hot type spark plug. |
| **Spark plug quickly becomes fouled with oil or carbon.** | 1. Worn piston ring.<br>2. Worn piston.<br>3. Worn cylinder.<br>4. Excessive valve-stem-to-valve-guide clearance.<br>5. Worn valve stem oil seal. | Replace.<br>Replace.<br>Rebore or replace.<br>Replace.<br>Replace. |
| **Spark plug electrodes overheat or burn.** | 1. Incorrect spark plug (hot type).<br>2. Overheated engine.<br>3. Loose spark plug.<br>4. Excessively lean air/fuel mixture. | Change to cold type spark plug.<br>Tune-up.<br>Tighten.<br>Adjust carburetor. |
| **Generator does not charge.** | 1. Open or short lead wires, or loose lead connections.<br>2. Shorted, grounded or open generator coil.<br>3. Shorted or punctured regulator/rectifier. | Repair, replace or connect properly.<br>Replace.<br>Replace. |
| **Generator charges but charging rate is below the specifications.** | 1. Lead wires tend to get shorted or open-circuited or loosely connected at terminal.<br>2. Grounded or open-circuited generator stator coils.<br>3. Defective regulator/rectifier.<br>4. Defective battery cell plates. | Repair or tighten.<br>Replace.<br>Replace.<br>Replace battery. |
| **Generator overcharges.** | 1. Internal short-circuit in the battery.<br>2. Damaged or defective regulator/rectifier.<br>3. Poorly grounded regulator/rectifier. | Replace battery.<br>Replace.<br>Clean and tighten ground connection. |

| Complaint | Symptom and possible causes | Remedy |
|---|---|---|
| **Unstable charging.** | 1. Lead wire insulation frayed due to vibration, resulting in intermittent shorting.<br>2. Internally shorted generator.<br>3. Defective regulator/rectifier. | Repair or replace.<br>Replace.<br>Replace. |
| **Starter button does not work.** | 1. Run down battery.<br>2. Defective switch contact.<br>3. Brushes do not seat properly on commutator in starter motor.<br>4. Defective starter relay/starter interlock switches.<br>5. Defective automatic de-compression solenoid and relay.<br>6. Automatic de-compression cable out of adjustment.<br>7. Defective ignitor. | Recharge or replace.<br>Replace.<br>Repair or replace.<br>Replace.<br>Replace.<br>Replace.<br>Replace. |

## BATTERY (MF battery)

| Complaint | Symptom and possible causes | Remedy |
|---|---|---|
| **Sulfation or spots on surfaces of cell plates.** | 1. Cracked battery case.<br>2. Battery has been left in a run-down condition for a long time. | Replace the battery.<br>Replace. |
| **Battery runs down quickly.** | 1. Incorrect charging method.<br>2. Battery cell plates have lost much of their active material as a result of overcharging.<br>3. Internally shorted battery.<br>4. Excessively low battery voltage.<br>5. Battery is too old.<br>6. Dirty container top and sides. | Check generator, regulator/rectifier circuit connections, and make necessary adjustments to obtain specified charging operation.<br>Replace battery and correct charging system.<br>Replace.<br>Recharge.<br>Replace.<br>Clean. |
| **Battery sulfation.** | 1. Incorrect charging rate.<br>(When not in use, battery should be checked at least once a month and properly charged if necessary, to avoid sulfation.)<br>2. The battery was left unused in a cold climate for too long. | Replace battery.<br>Replace the battery if badly sulfated. |

# WIRING DIAGRAM

## For E-03, -28 and -33

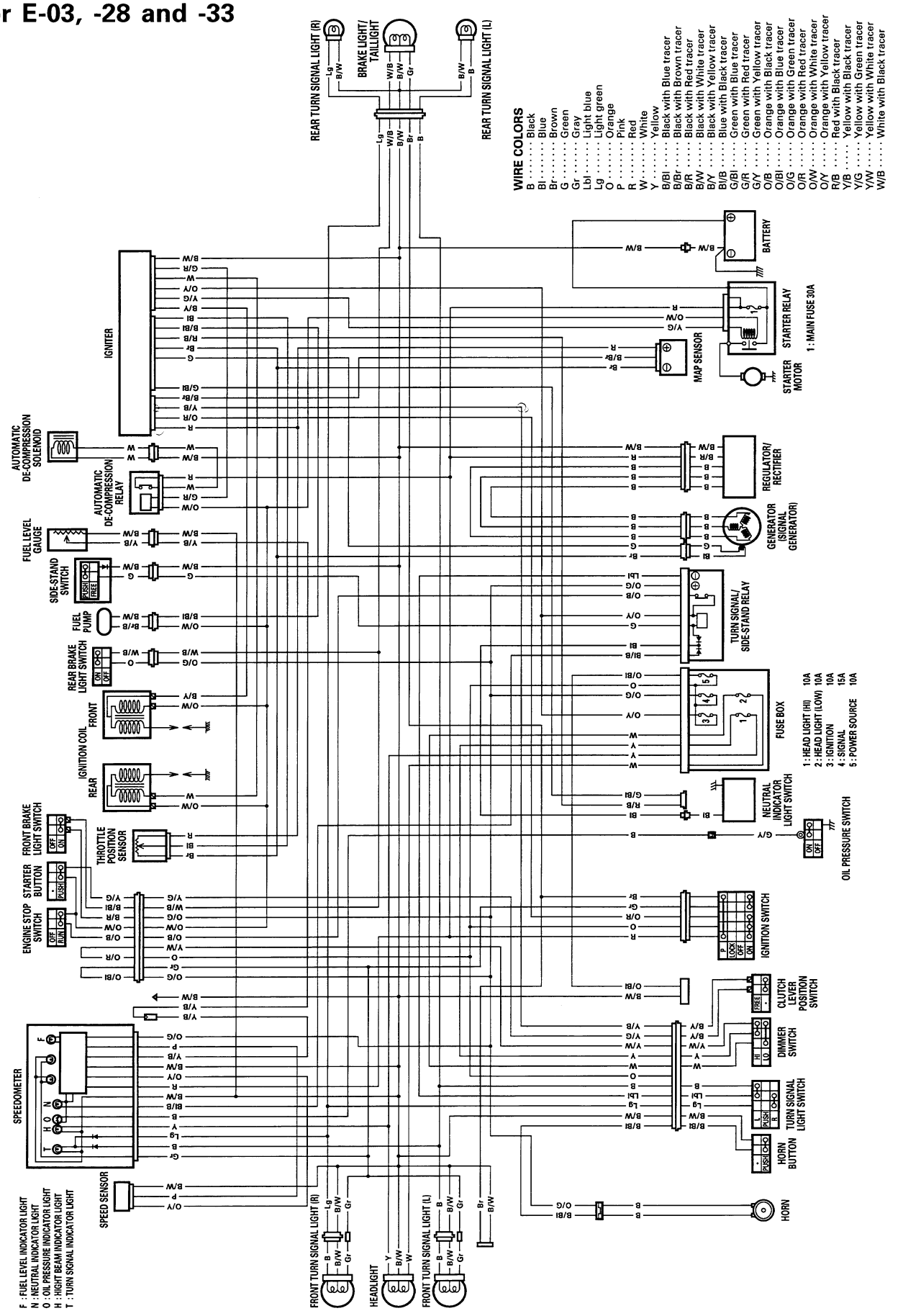

# For E-02, -04, -17, -18, -22, -25 and -34

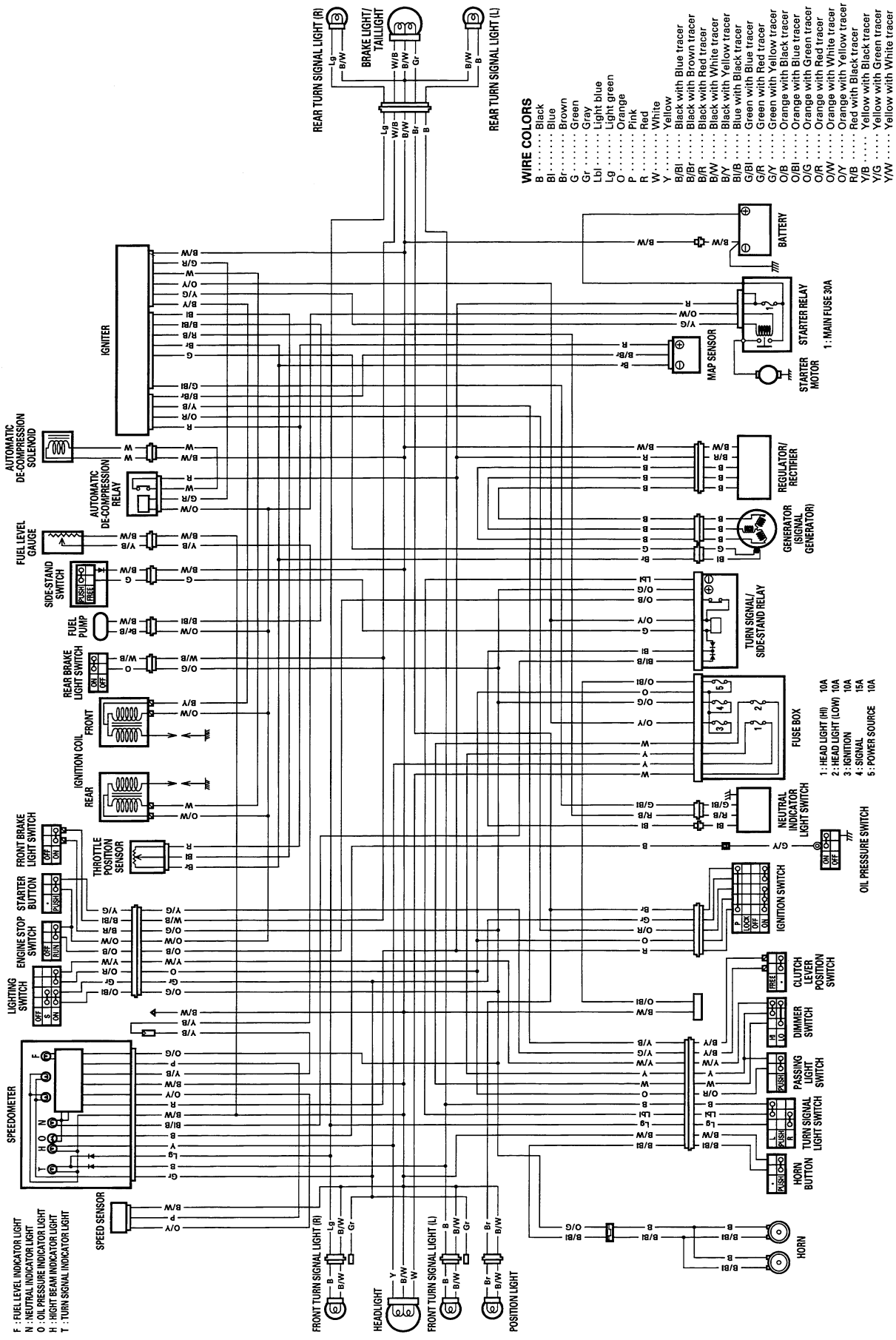

# For E-24

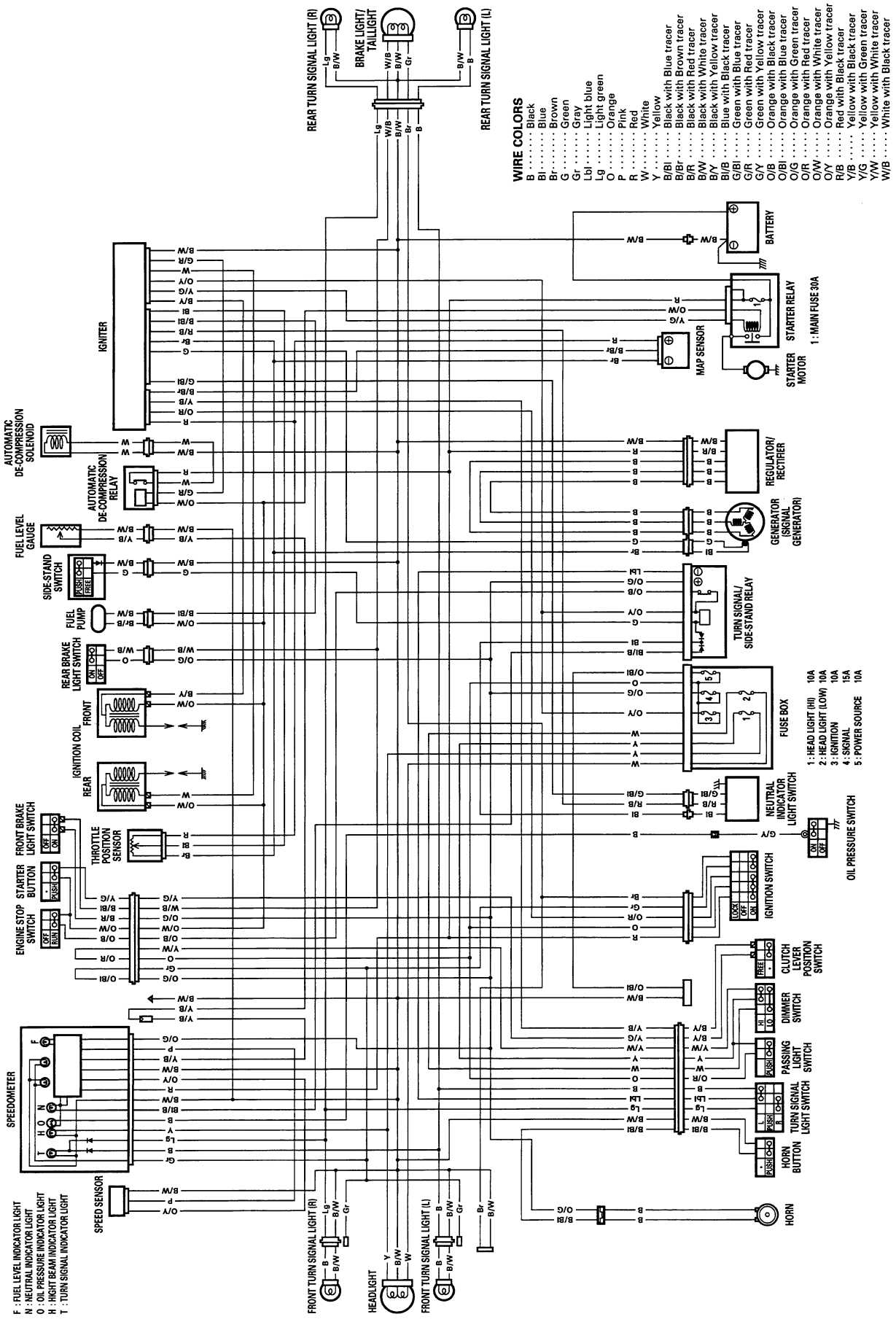
REAR TURN SIGNAL LIGHT (R)
BRAKE LIGHT/ TAILLIGHT
REAR TURN SIGNAL LIGHT (L)
WIRE COLORS
B · · · · · Black
Bl · · · · · Blue
Br · · · · · Brown
G · · · · · Green
Gr · · · · · Gray
Lbl · · · · · Light blue
Lg · · · · · Light green
O · · · · · Orange
P · · · · · Pink
R · · · · · Red
W · · · · · White
Y · · · · · Yellow
B/Bl · · · · · Black with Blue tracer
B/Br · · · · · Black with Brown tracer
B/R · · · · · Black with Red tracer
B/W · · · · · Black with White tracer
B/Y · · · · · Black with Yellow tracer
Bl/B · · · · · Blue with Black tracer
G/Bl · · · · · Green with Blue tracer
G/R · · · · · Green with Red tracer
G/Y · · · · · Green with Yellow tracer
O/B · · · · · Orange with Black tracer
O/Bl · · · · · Orange with Blue tracer
O/G · · · · · Orange with Green tracer
O/R · · · · · Orange with Red tracer
O/W · · · · · Orange with White tracer
O/Y · · · · · Orange with Yellow tracer
R/B · · · · · Red with Black tracer
Y/B · · · · · Yellow with Black tracer
Y/G · · · · · Yellow with Green tracer
Y/W · · · · · Yellow with White tracer
W/B · · · · · White with Black tracer
BATTERY
STARTER RELAY
1 : MAIN FUSE 30A
STARTER MOTOR
MAP SENSOR
IGNITER
REGULATOR/ RECTIFIER
GENERATOR (SIGNAL GENERATOR)
TURN SIGNAL/ SIDE-STAND RELAY
FUSE BOX
1 : HEAD LIGHT (HI) 10A
2 : HEAD LIGHT (LOW) 10A
3 : IGNITION 10A
4 : SIGNAL 15A
5 : POWER SOURCE 10A
NEUTRAL INDICATOR LIGHT SWITCH
OIL PRESSURE SWITCH
IGNITION SWITCH
CLUTCH LEVER POSITION SWITCH
DIMMER SWITCH
PASSING LIGHT SWITCH
TURN SIGNAL LIGHT SWITCH
HORN BUTTON
HORN
AUTOMATIC DE-COMPRESSION SOLENOID
AUTOMATIC DE-COMPRESSION RELAY
FUEL LEVEL GAUGE
SIDE-STAND SWITCH
FUEL PUMP
REAR BRAKE LIGHT SWITCH
IGNITION COIL
FRONT
REAR
FRONT BRAKE LIGHT SWITCH
THROTTLE POSITION SENSOR
STARTER BUTTON
ENGINE STOP SWITCH
SPEEDOMETER
SPEED SENSOR
FRONT TURN SIGNAL LIGHT (R)
HEADLIGHT
FRONT TURN SIGNAL LIGHT (L)
F : FUEL LEVEL INDICATOR LIGHT
N : NEUTRAL INDICATOR LIGHT
O : OIL PRESSURE INDICATOR LIGHT
H : HIGHT BEAM INDICATOR LIGHT
T : TURN SIGNAL INDICATOR LIGHT

# WIRE HARNESS, CABLE AND HOSE ROUTING

## WIRE HARNESS ROUTING

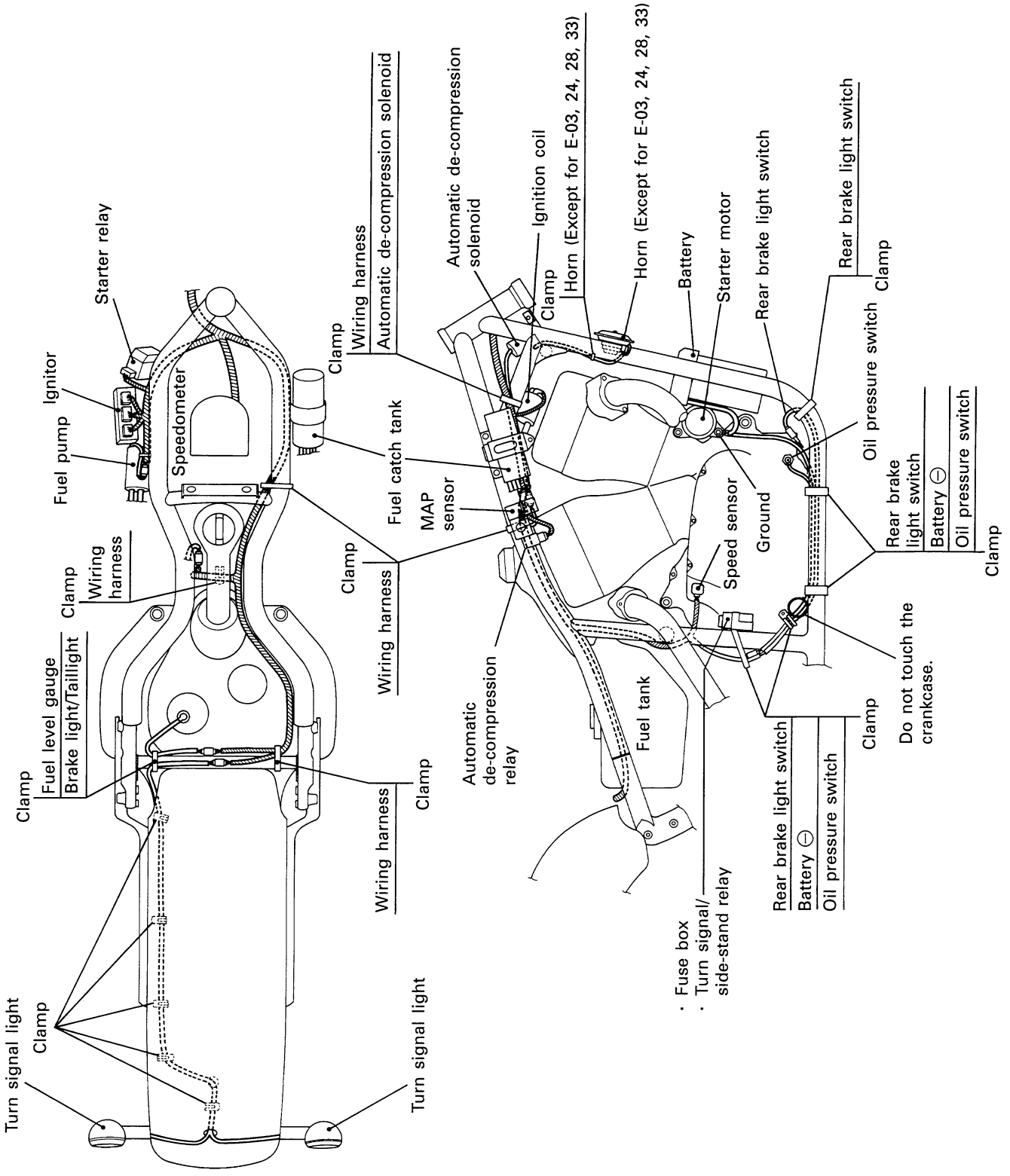

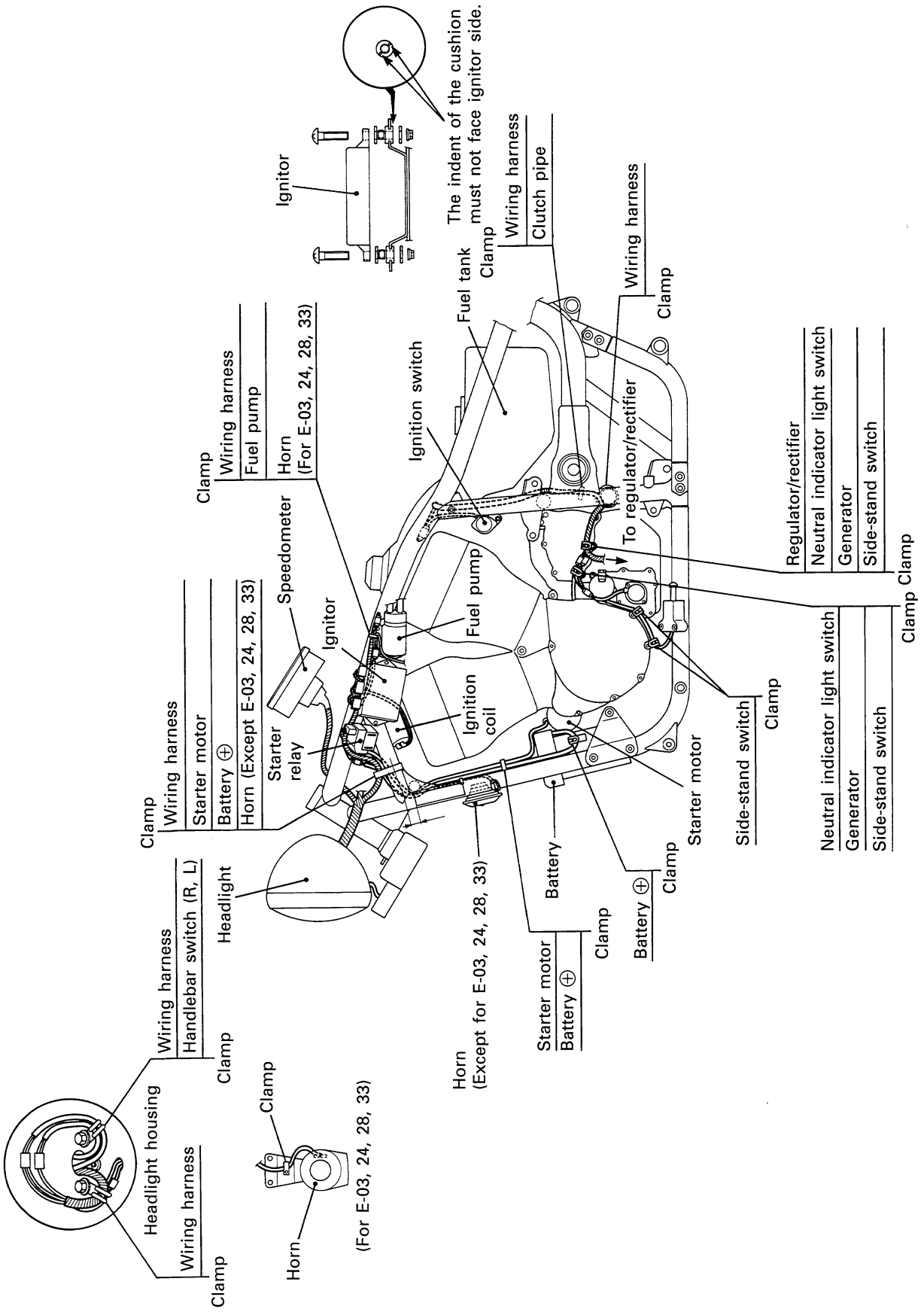
Ignitor
The indent of the cushion must not face ignitor side.
Clamp
Wiring harness
Clutch pipe
Fuel tank
Wiring harness
Clamp
Clamp
Wiring harness
Fuel pump
Horn (For E-03, 24, 28, 33)
Ignition switch
To regulator/rectifier
Regulator/rectifier
Neutral indicator light switch
Generator
Side-stand switch
Clamp
Speedometer
Ignitor
Fuel pump
Clamp
Clamp
Wiring harness
Starter motor
Battery ⊕
Horn (Except E-03, 24, 28, 33)
Starter relay
Ignition coil
Side-stand switch
Clamp
Starter motor
Neutral indicator light switch
Generator
Side-stand switch
Headlight
Battery
Battery ⊕
Clamp
Horn (Except for E-03, 24, 28, 33)
Starter motor
Battery ⊕
Clamp
Wiring harness
Handlebar switch (R, L)
Clamp
Headlight housing
Clamp
Wiring harness
Clamp
Horn
(For E-03, 24, 28, 33)

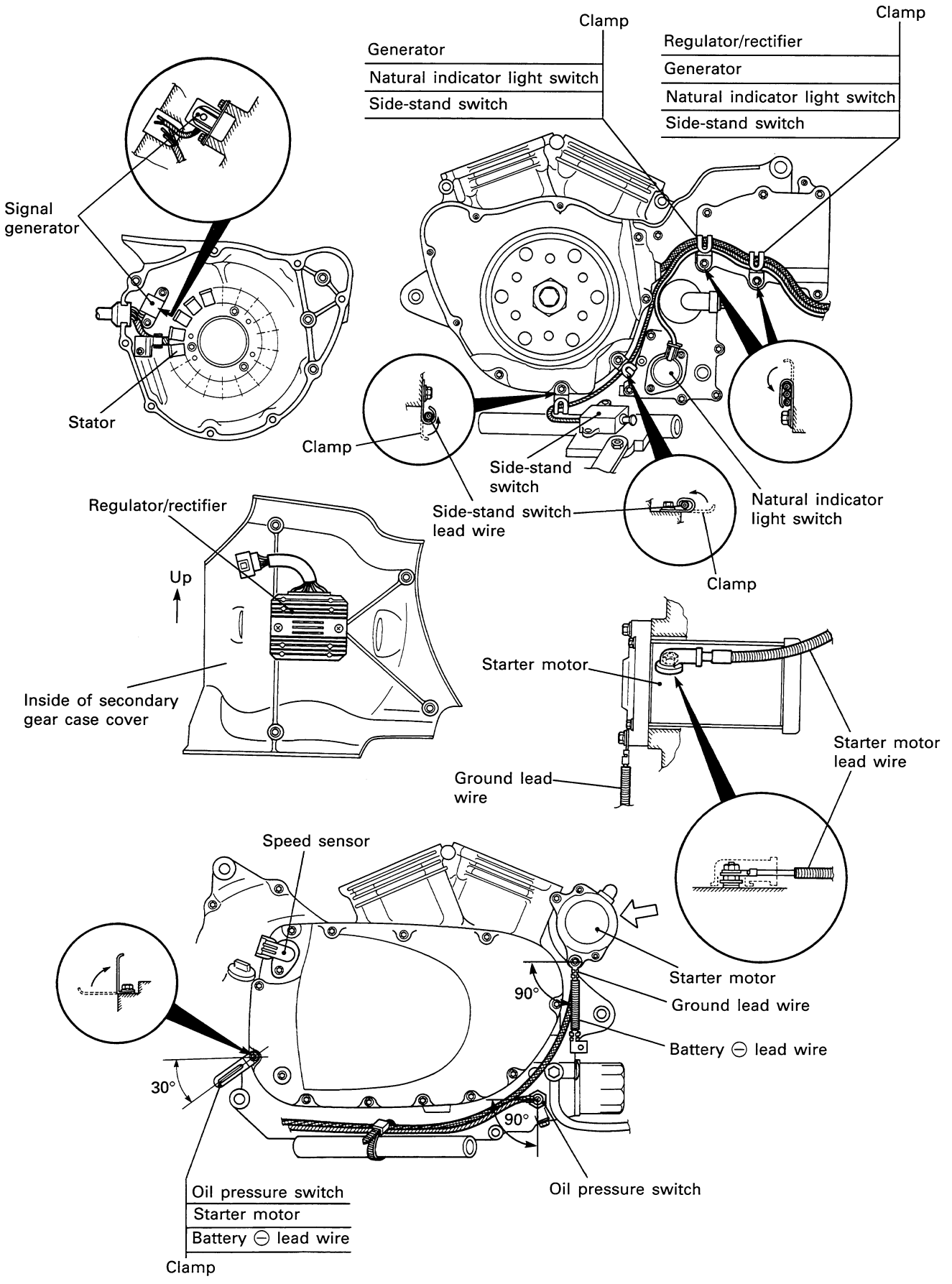
Clamp
Clamp
Generator
Natural indicator light switch
Side-stand switch
Regulator/rectifier
Generator
Natural indicator light switch
Side-stand switch
Signal generator
Stator
Clamp
Side-stand switch
Side-stand switch lead wire
Natural indicator light switch
Clamp
Regulator/rectifier
Up
Inside of secondary gear case cover
Starter motor
Starter motor lead wire
Ground lead wire
Speed sensor
Starter motor
Ground lead wire
Battery ⊖ lead wire
90°
30°
90°
Oil pressure switch
Oil pressure switch
Starter motor
Battery ⊖ lead wire
Clamp

# CABLE AND HOSE ROUTING

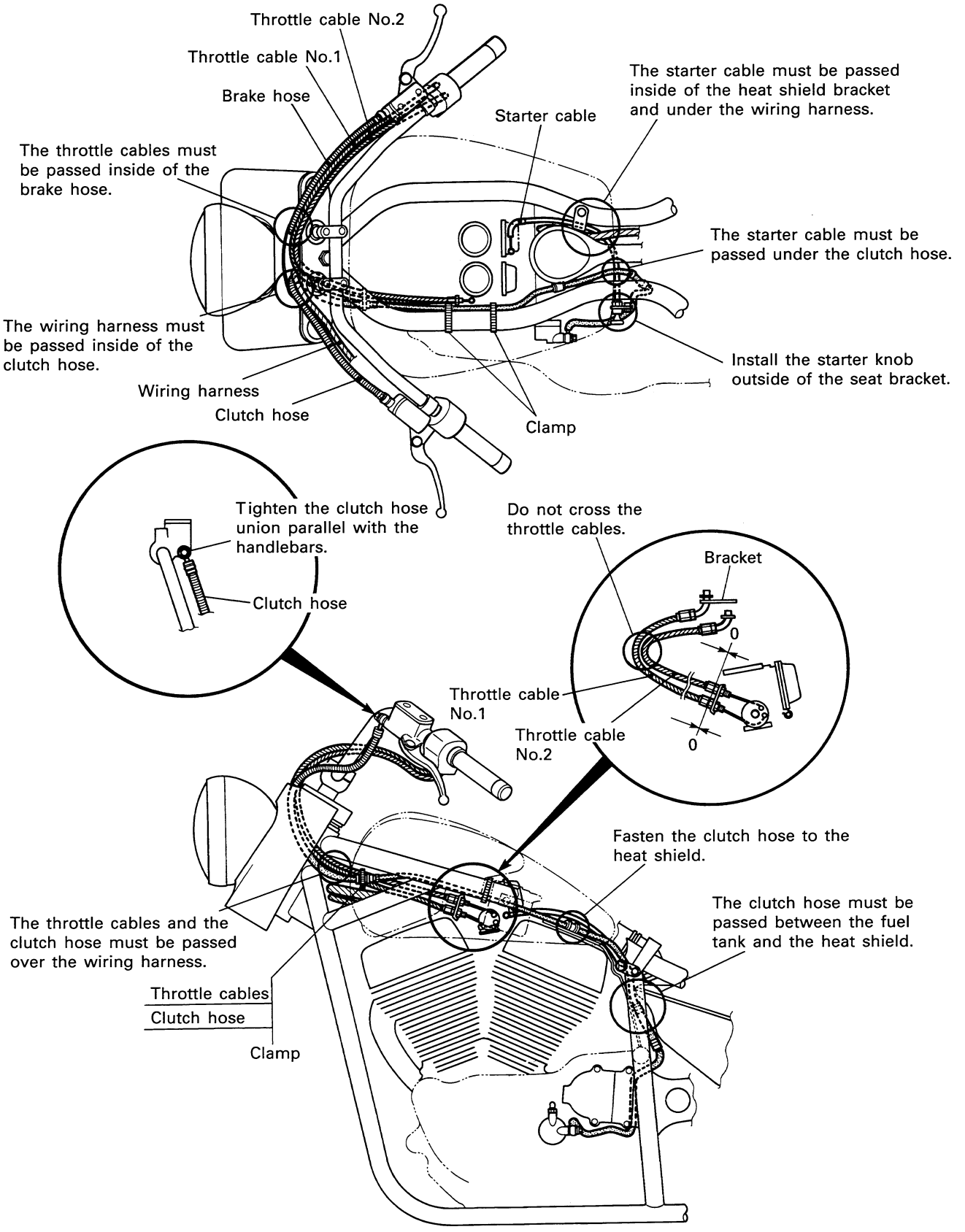

# FUEL SYSTEM HOSE ROUTING

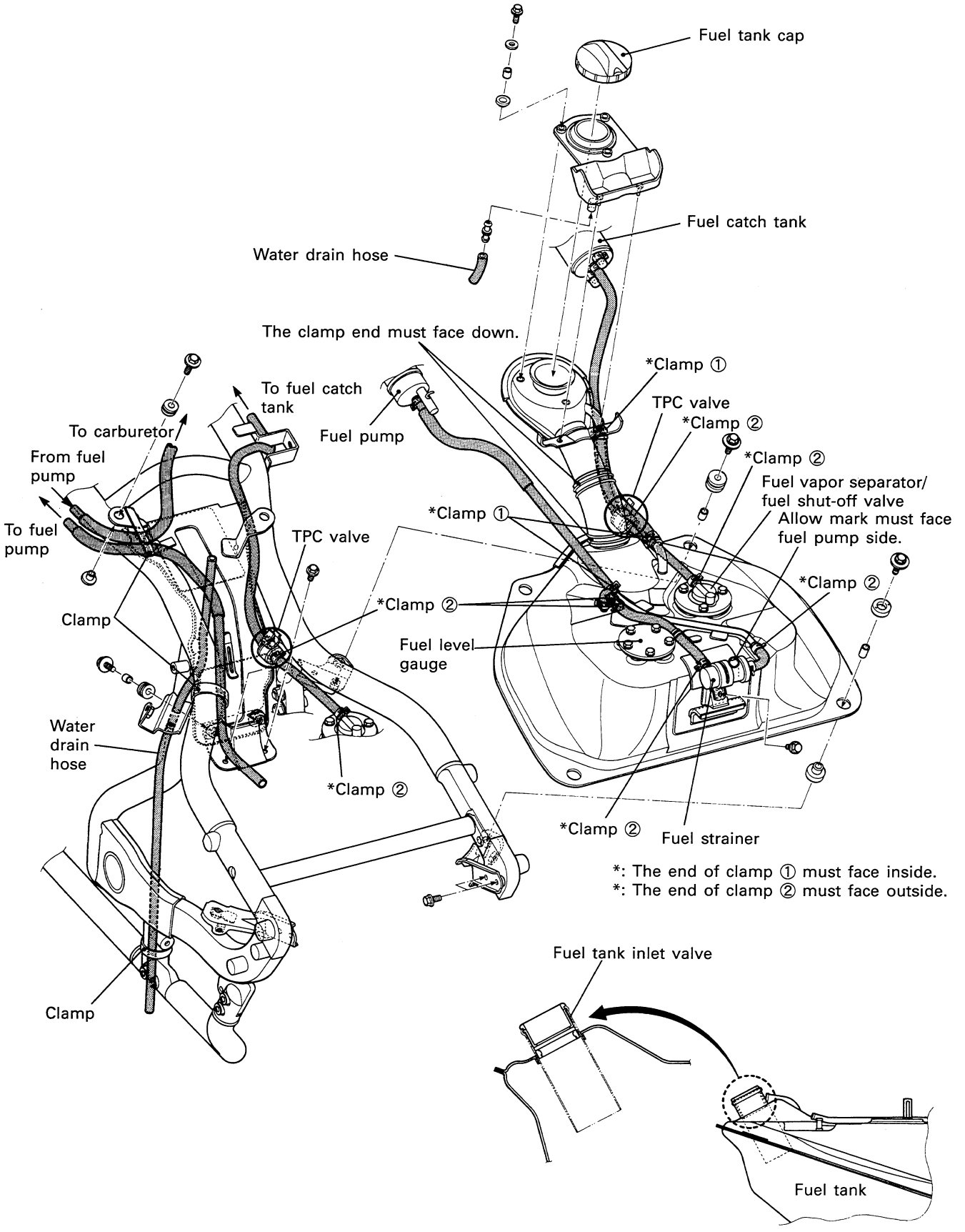

# FRONT BRAKE HOSE ROUTING

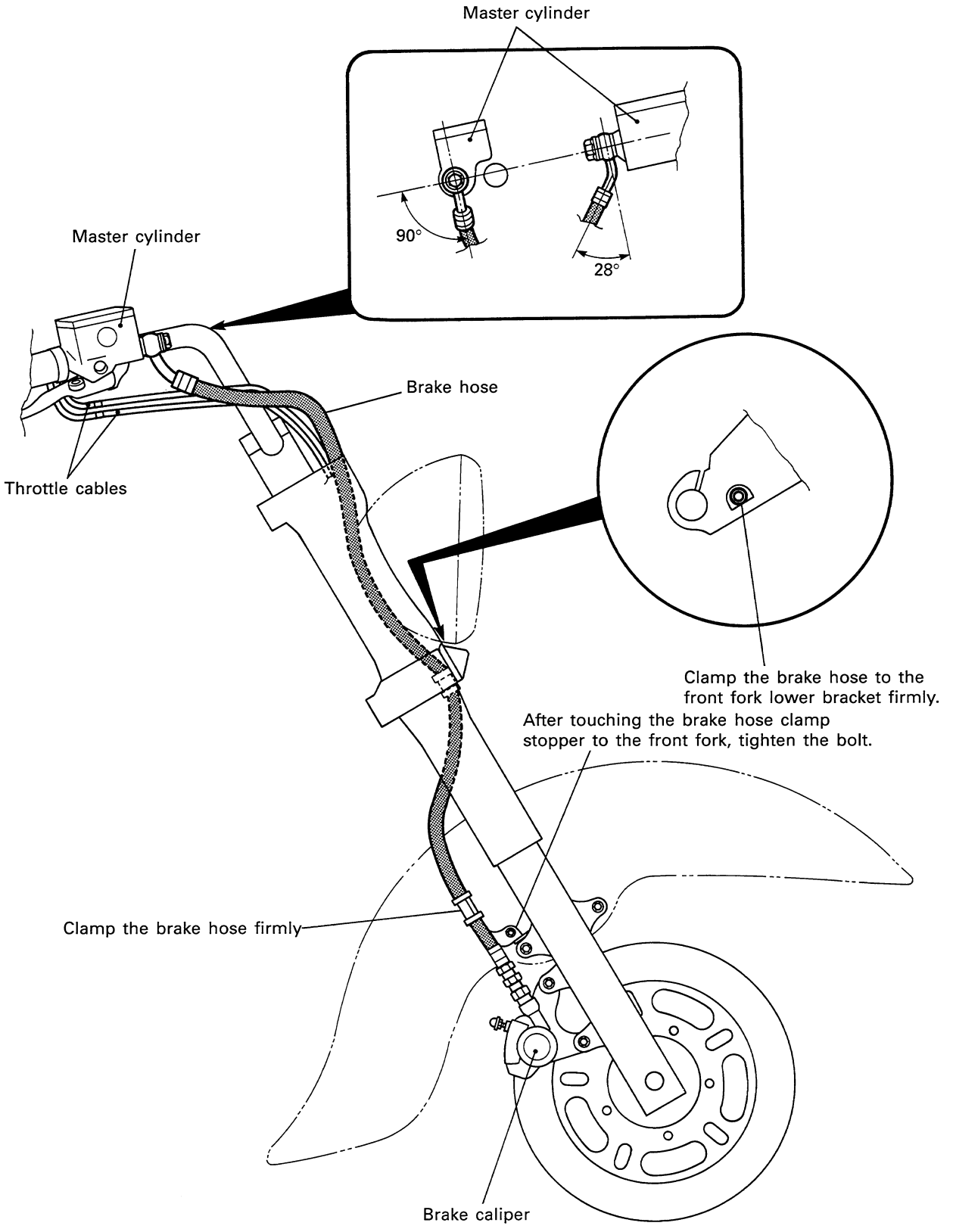

## REAR BRAKE HOSE ROUTING

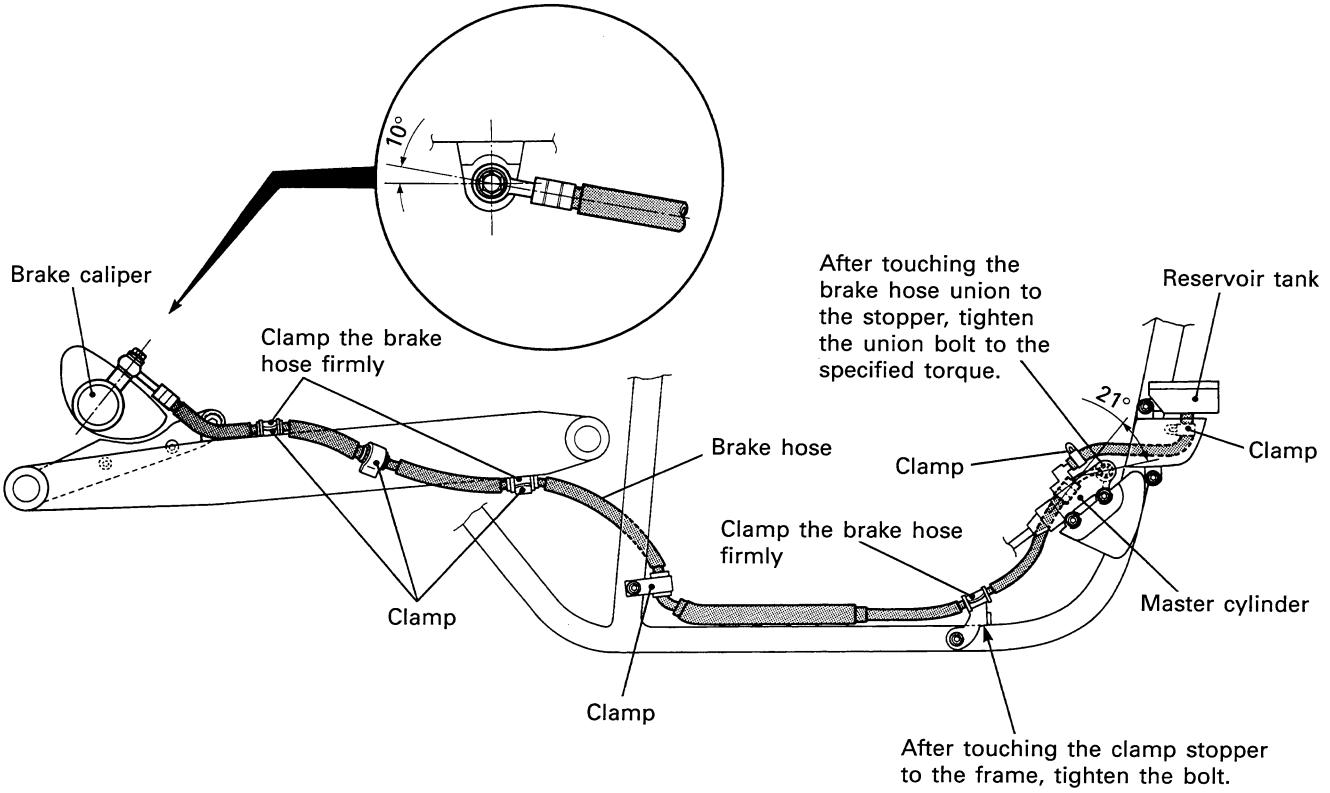


## OIL HOSE ROUTING

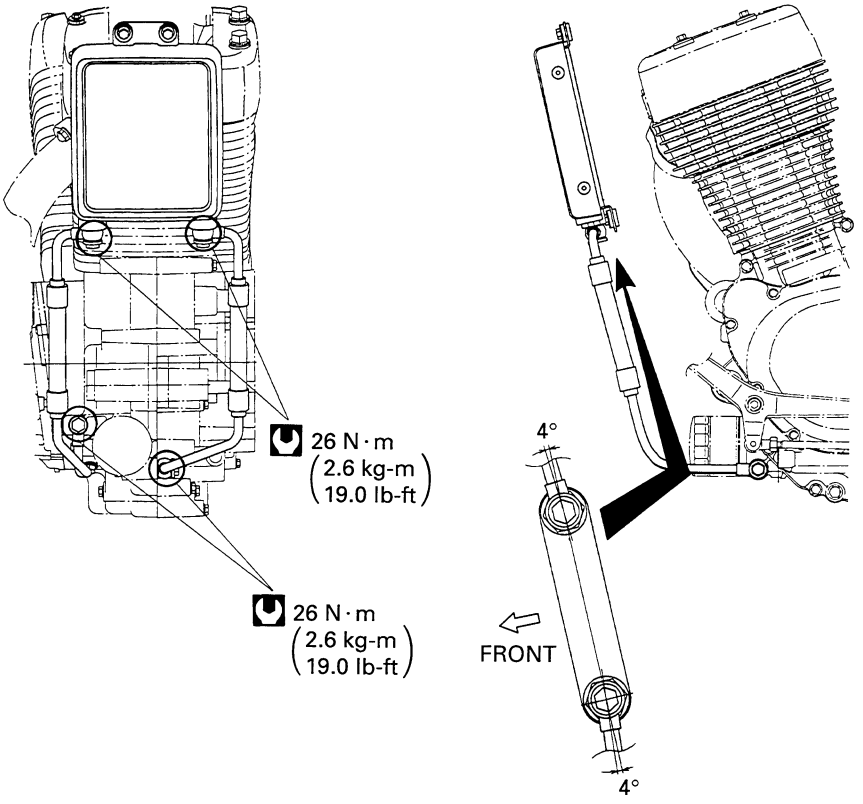

## PAIR (AIR SUPPLY) SYSTEM HOSE ROUTING

**(For E-03, -18, -24, -28 and 33)**

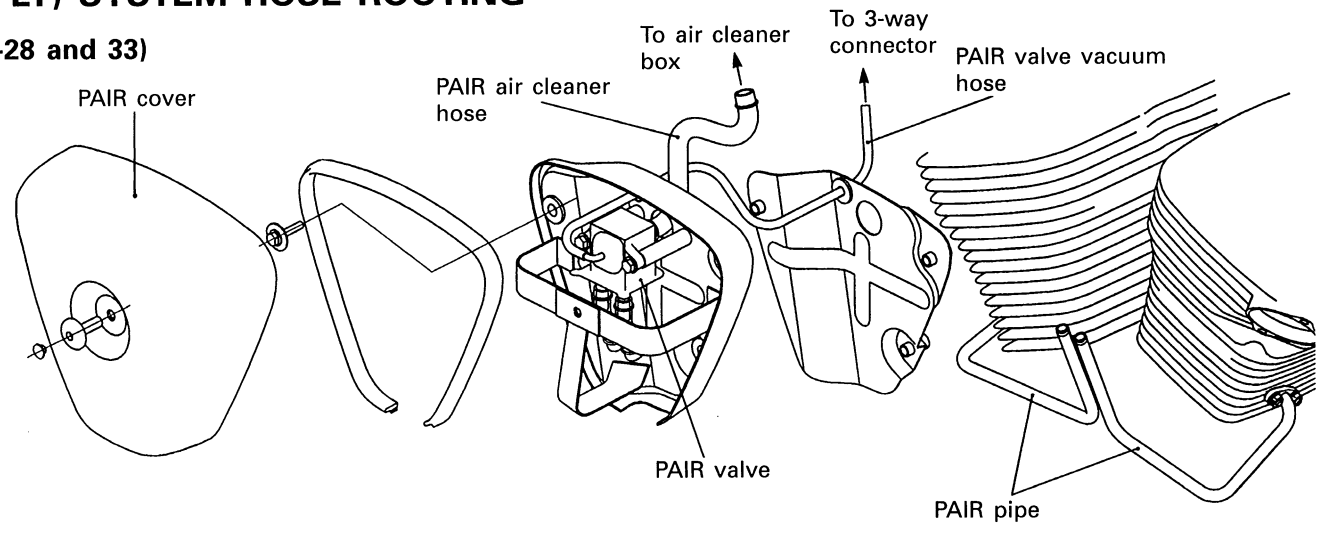


## ENGINE SIDE BOX

**(For the other model)**

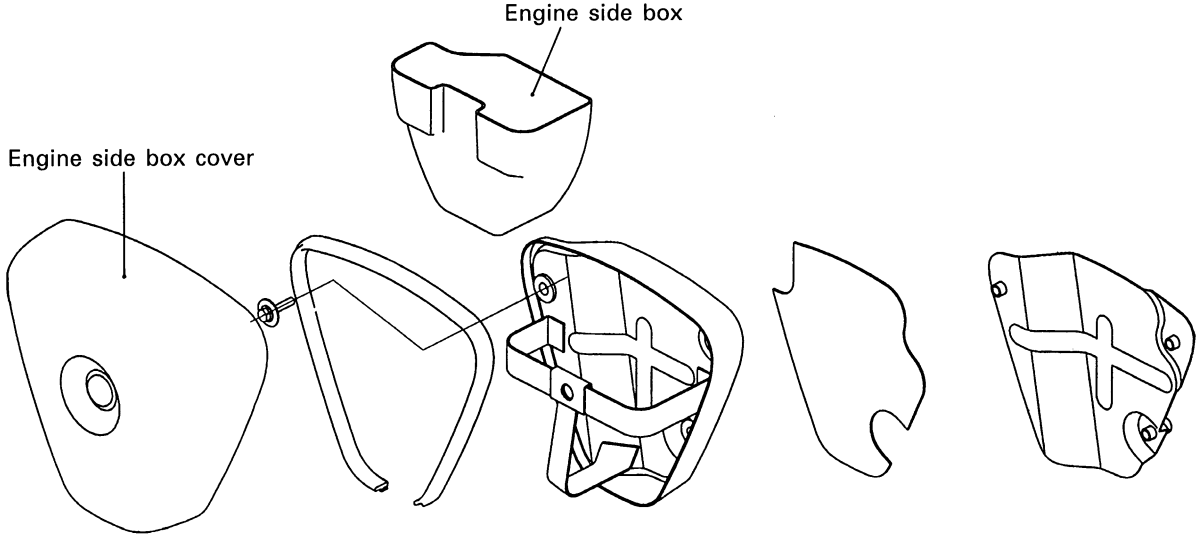

# UPPER COVERS, METER AND FUEL INLET COVER SET-UP

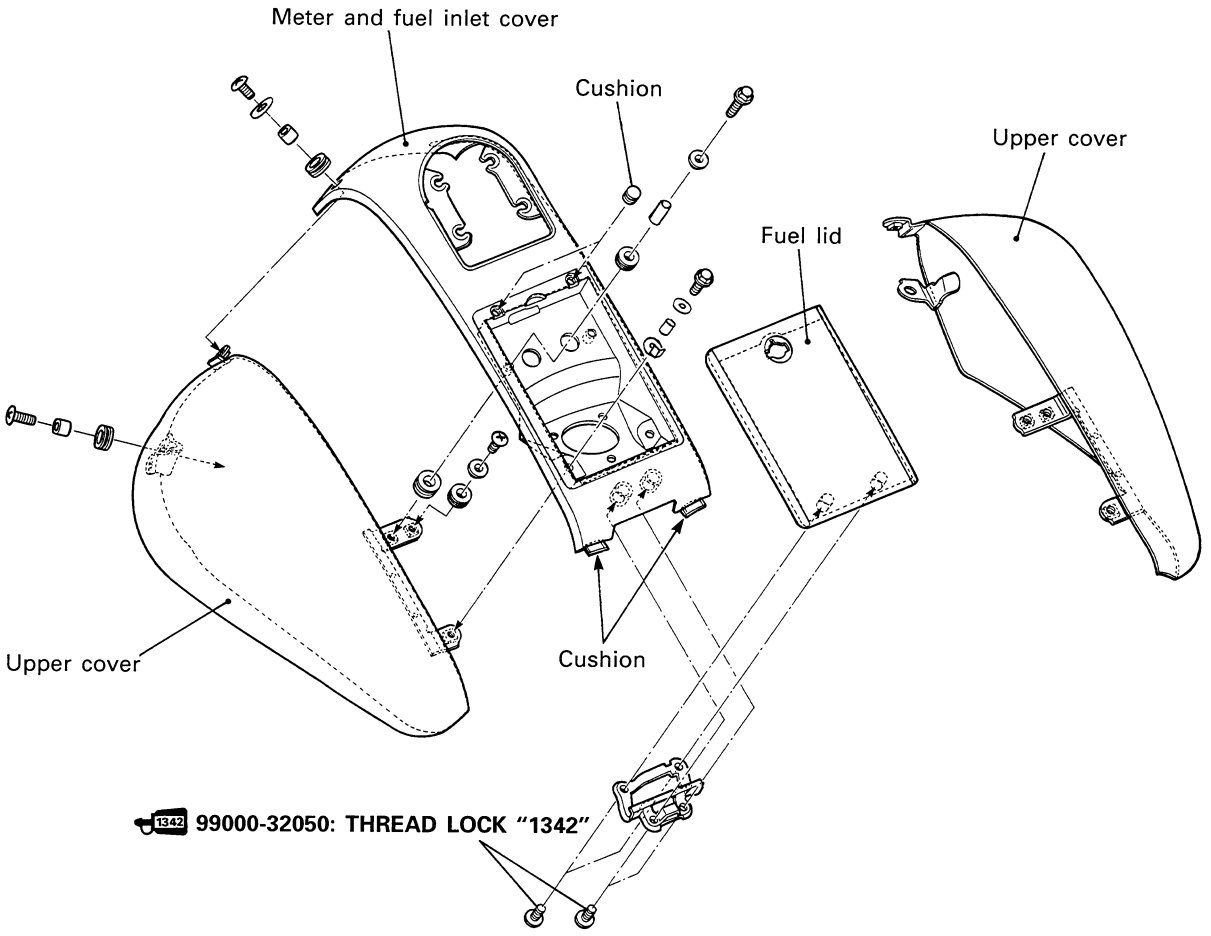


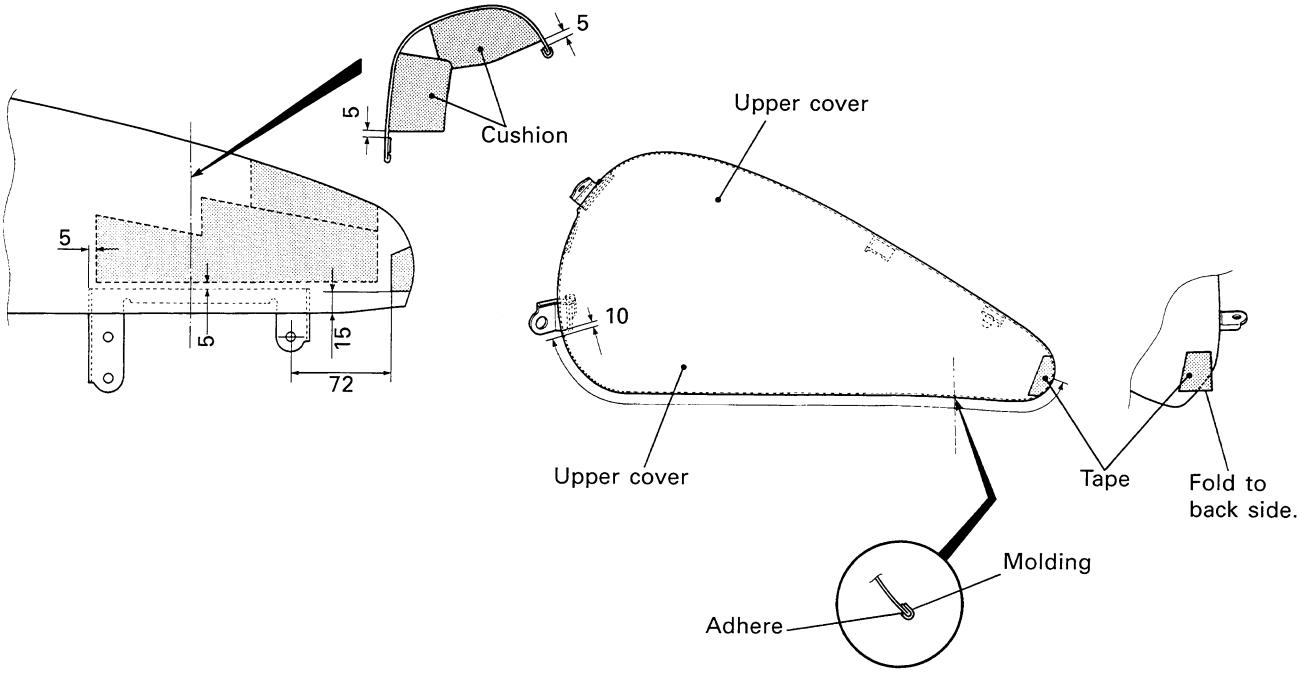

# FRAME HEAD AND FRAME COVER CUSHION

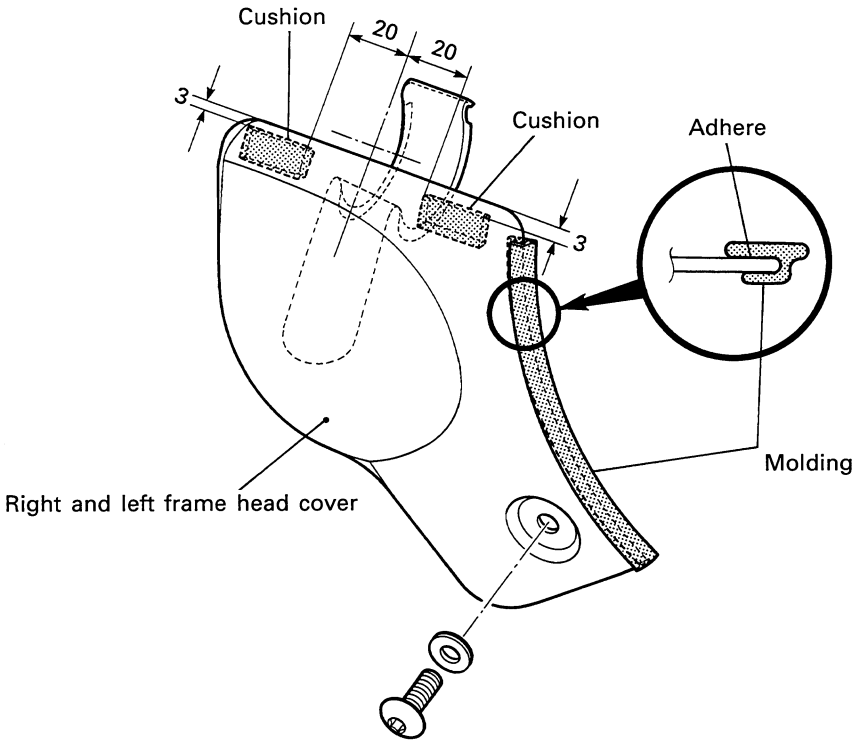


# FRAME COVER SHIELD

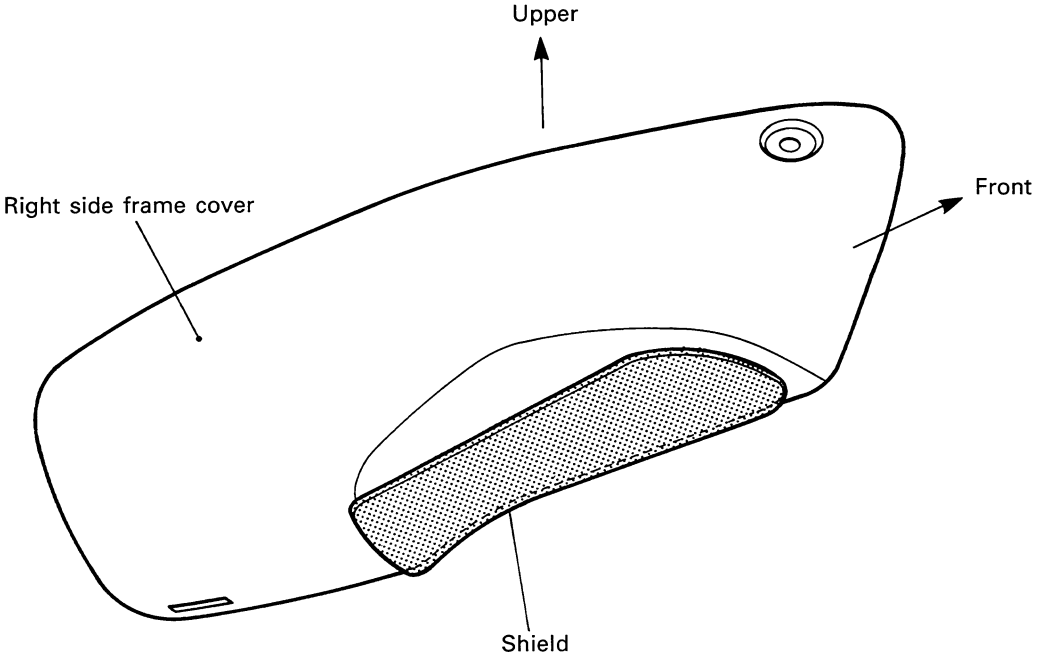

# BRAKE LIGHT/TAILLIGHT SET-UP

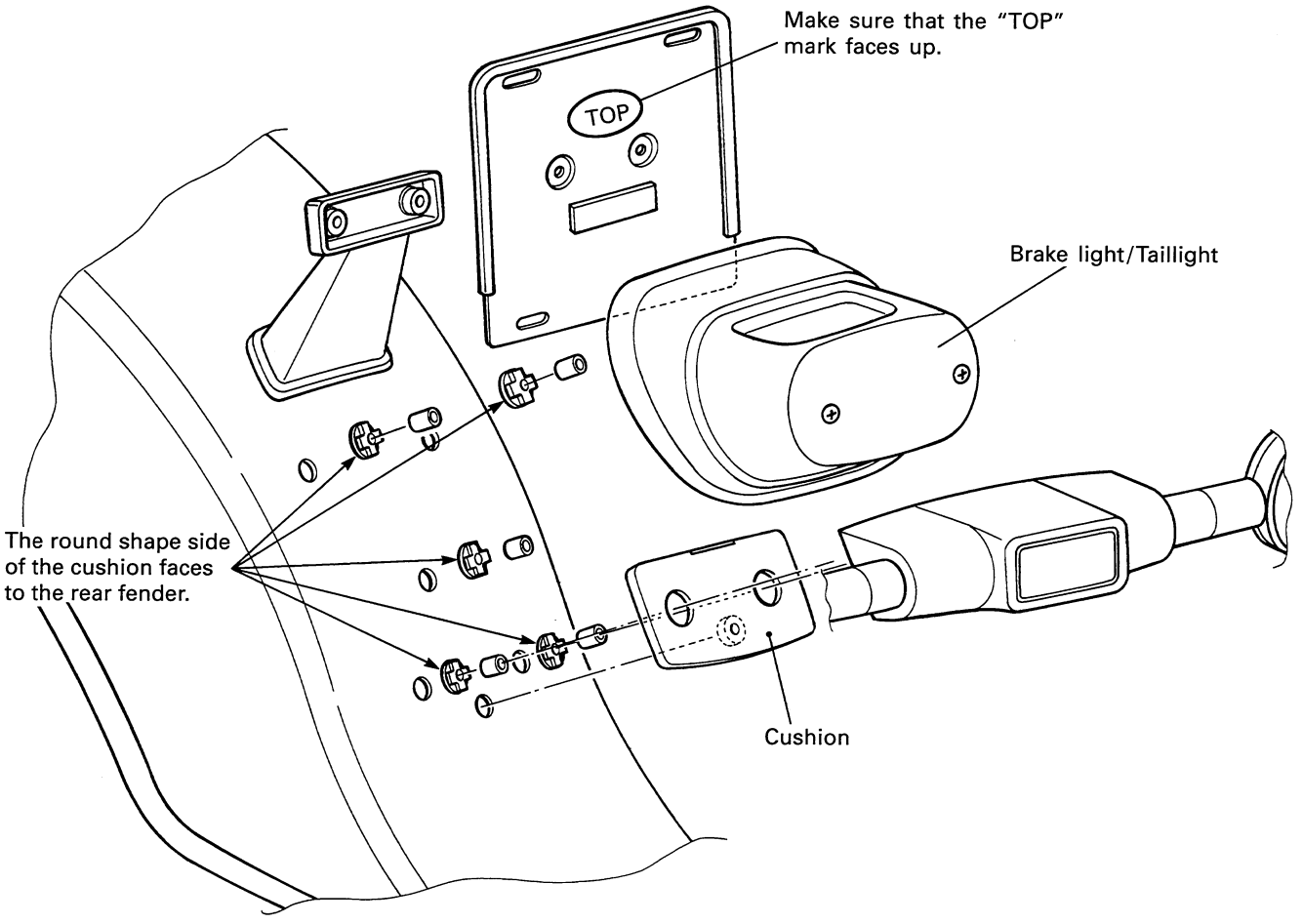

# SPECIAL TOOLS

| | | | | |
|---|---|---|---|---|
| 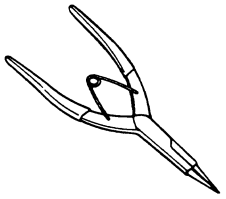 09900-06107 Snap ring pliers | 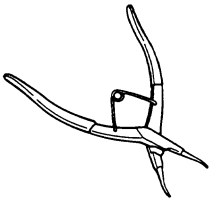 09900-06108 Snap ring pliers | 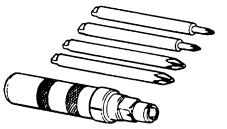 09900-09004 Impact driver set | 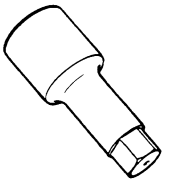 09900-18710 Hexagon socket (12 mm) | 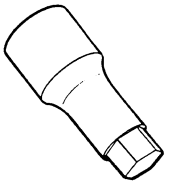 09900-18720 Hexagon socket (14 mm) |
| 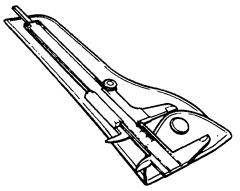 09900-20102 Vernier calipers (200 mm) | 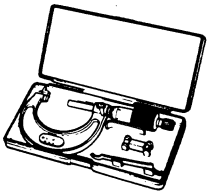 09900-20202 Micrometer (25–50 mm) | 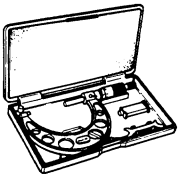 09900-20203 Micrometer (50–75 mm) | 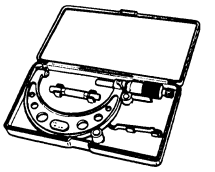 09900-20204 Micrometer (75–100 mm) | 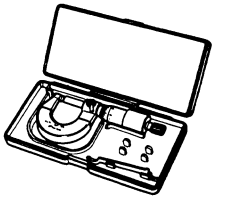 09900-20205 Micrometer (0–25 mm) |
| 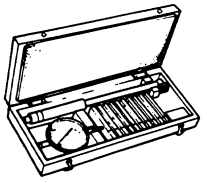 09900-20508 Cylinder gauge set | 09900-20602 Dial gauge (1/1000, 1 mm) | 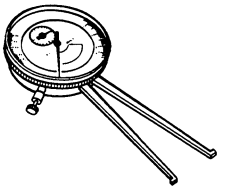 09900-20605 Dial calipers (10–34 mm) | 09900-20606 Dial gauge (1/100, 10 mm) | 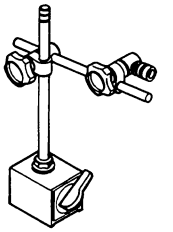 09900-20701 Magnetic stand |
| 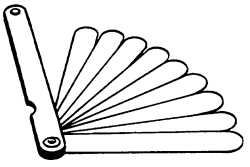 09900-20803 Thickness gauge | 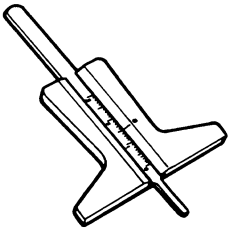 09900-20805 Tire depth gauge | 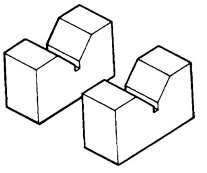 09900-21304 V-block (100 mm) | 09900-22301 Plastigauge | 09900-22302 Plastigauge |
| 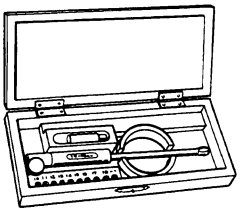 09900-22403 Small bore gauge (18–35 mm) | 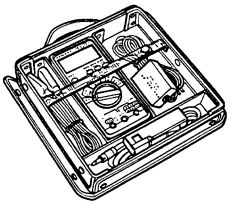 09900-25008 Multi circuit tester | 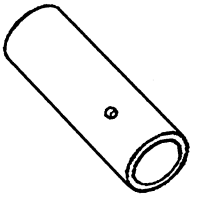 09913-10740 Air bleeding tool | 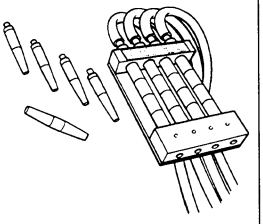 09913-13121 Carburetor balancer | 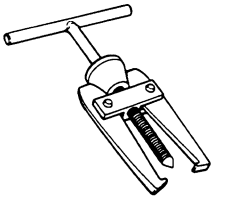 09913-60910 Bearing puller |
| 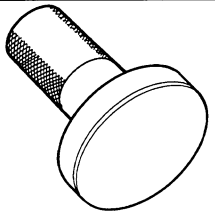 09913-75520 Bearing remover/ installer | 09913-75810 Bearing remover/ installer | 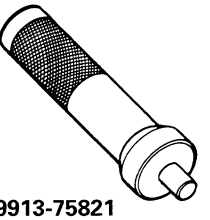 09913-75821 Bearing remover/ installer | 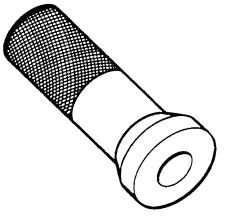 09913-76010 Bearing installer | 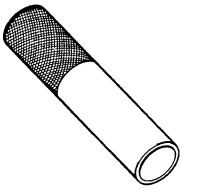 09913-84510 Bearing installer |

| | | | | |
|---|---|---|---|---|
| 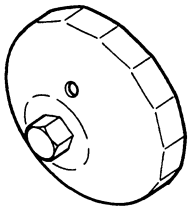 09915-40610 Oil filter wrench | 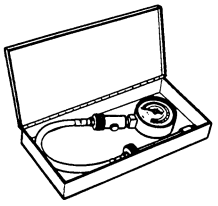 09915-64510 Compression gauge | 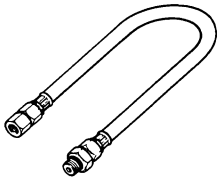 09915-74520 Oil pressure gauge hose | 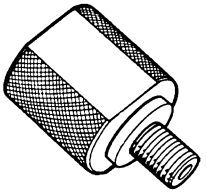 09915-74532 Oil pressure gauge adaptor | 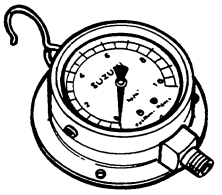 09915-77330 Meter (For high pressure) |
| 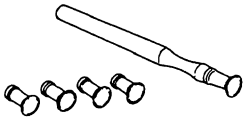 09916-10911 Valve lapper set | 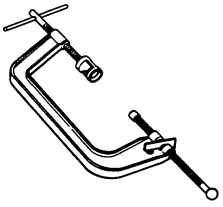 09916-14510 Valve lifter | 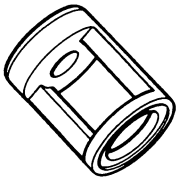 09916-14910 Valve lifter attachment | 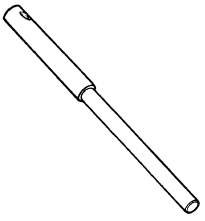 09916-24480 Solid pilot (N-140-5.5) | 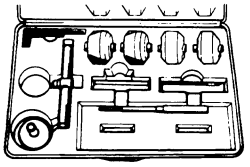 09916-24900 Valve seat cutter set |
| 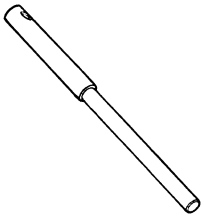 09916-29030 Solid pilot (N-110-1) | 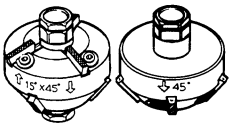 Valve seat cutter (See p. 3A-12) | 09916-34520 Valve guide reamer (7.0 mm) | 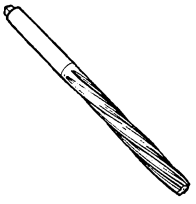 09916-34531 Valve guide reamer (12.3 mm) | 09916-34542 Reamer handle |
| 09916-34550 Valve guide reamer (5.5 mm) | 09916-34580 Valve guide reamer (10.8 mm) | 09916-44511 Valve guide remover/installer | 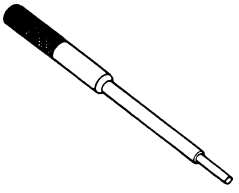 09916-44910 Valve guide remover/installer | 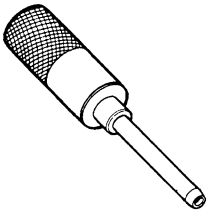 09916-57321 Valve guide remover |
| 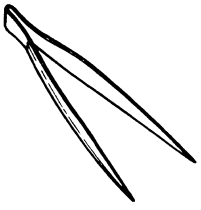 09916-84511 Tweezers | 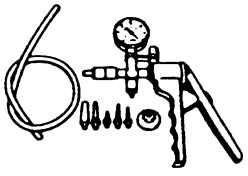 09917-47010 Vacuum pump gauge | 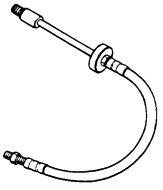 09918-03810 Compression gauge adaptor | 09918-53810 Chain tensioner lock tool | 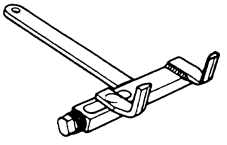 09920-53740 Clutch sleeve hub holder |
| 09923-74510 Bearing remover | 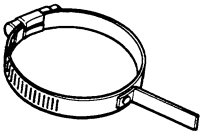 09924-34510 Backlash measuring tool (27–50) | 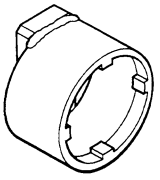 09924-62410 Final drive gear bearing holder wrench | 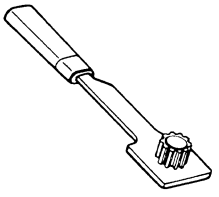 09924-64510 Final drive gear coupling holder | 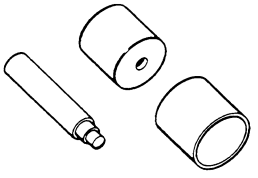 09924-74570 Final driven gear remover/installer |

| | | | | |
|---|---|---|---|---|
| 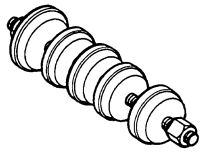 09924-84510 Bearing installer set | 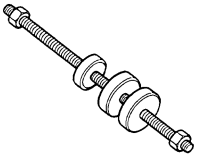 09924-84521 Bearing installer | 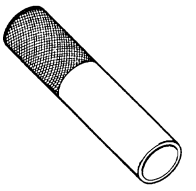 09925-98221 Bearing remover | 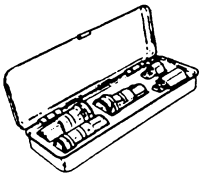 09930-10121 Spark plug wrench set | 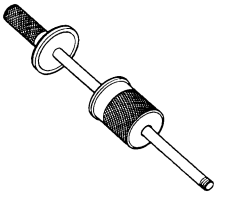 09930-30102 Sliding shaft |
| 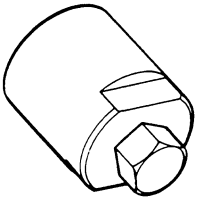 09930-30721 Rotor remover | 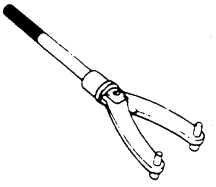 09930-40113 Rotor holder | 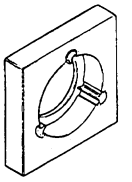 09930-73130 Starter torque limiter holder | 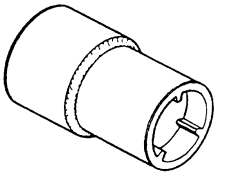 09930-73140 Starter torque limiter socket | 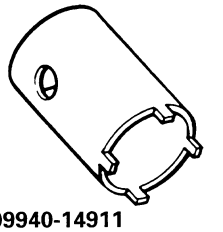 09940-14911 Steering stem nut wrench |
| 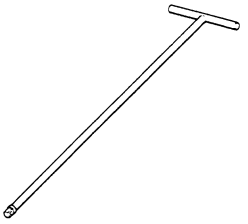 09940-34520 T handle | 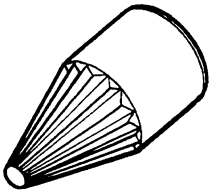 09940-34531 Attachment "A" | 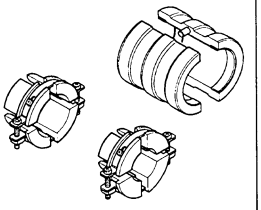 09940-52861 Front fork oil seal installer | 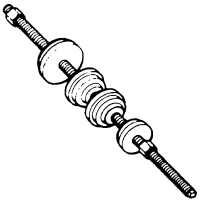 09941-34513 Steering outer race installer | 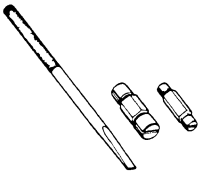 09941-50111 Bearing remover set |
| 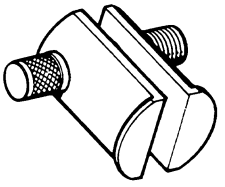 09941-54911 Bearing outer race remover | 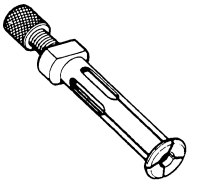 09941-64511 Bearing remover | 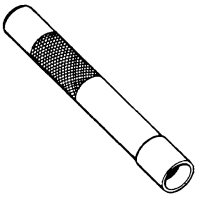 09941-74911 Steering bearing installer | 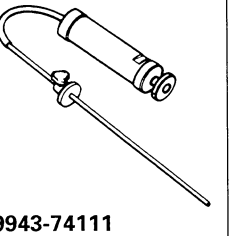 09943-74111 Front fork oil level gauge | 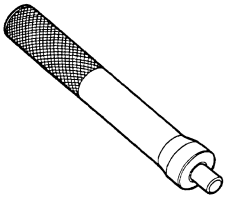 09943-88211 Bearing remover |

# TIGHTENING TORQUE

## ENGINE

| ITEM | | | N·m | kg-m | lb-ft |
|---|---|---|---|---|---|
| Rocker arm shaft | | | 37 | 3.7 | 27.0 |
| Rocker arm shaft plug | | | 28 | 2.8 | 20.0 |
| Cylinder head cover bolt | | 6 mm | 10 | 1.0 | 7.0 |
| | | 8 mm | 25 | 2.5 | 18.0 |
| Cylinder head bolt and nut | 8 mm | Initial | 10 | 1.0 | 7.0 |
| | | Final | 25 | 2.5 | 18.0 |
| | 10 mm | Initial | 25 | 2.5 | 18.0 |
| | | Final | 37 | 3.7 | 27.0 |
| Cam sprocket bolt | | | 15 | 1.5 | 11.0 |
| Rear cylinder head cover plug | | | 25 | 2.5 | 18.0 |
| Cylinder head cover oil plug | | | 10 | 1.0 | 7.0 |
| Cam chain tension adjuster mounting bolt | | | 10 | 1.0 | 7.0 |
| Cam chain tensioner bolt | | | 10 | 1.0 | 7.0 |
| Primary drive gear bolt | | | 150 | 15.0 | 108.5 |
| Clutch spring set bolt | | | 10 | 1.0 | 7.0 |
| Clutch spring support bolt | | | 11 | 1.1 | 8.0 |
| Clutch sleeve hub nut | | | 95 | 9.5 | 68.5 |
| Driveshaft bolt | | | 60 | 6.0 | 43.5 |
| Secondary gear case bolt | | Initial | 10 | 1.0 | 7.0 |
| | | Final | 22 | 2.2 | 16.0 |
| Generator rotor bolt | | | 160 | 16.0 | 115.5 |
| Starter clutch allen bolt | | | 26 | 2.6 | 19.0 |
| Crankcase bolt | 6 mm | | 11 | 1.1 | 8.0 |
| | 8 mm | Initial | 10 | 1.0 | 7.0 |
| | | Final | 22 | 2.2 | 16.0 |
| Conrod cap nut | | Initial | 25 | 2.5 | 18.0 |
| | | Final | 51 | 5.1 | 37.0 |
| Oil pressure regulator | | | 28 | 2.8 | 20.0 |
| Oil pump mounting bolt | | | 10 | 1.0 | 7.0 |
| Oil filter union | | | 15 | 1.5 | 11.0 |
| Piston cooling oil jet plate bolt | | | 10 | 1.0 | 7.0 |
| Oil separator bolt | | | 10 | 1.0 | 7.0 |
| Oil pressure switch | | | 14 | 1.4 | 10.0 |
| Oil drain plug | | | 21 | 2.1 | 15.0 |
| Gearshift arm stopper bolt | | | 23 | 2.3 | 16.5 |
| Gearshift cam stopper bolt/nut | | | 10 | 1.0 | 7.0 |
| Gearshift cam stopper retainer bolt | | | 10 | 1.0 | 7.0 |

| ITEM | | N·m | kg-m | lb-ft |
|---|---|---|---|---|
| Oil plug | 6 mm | 10 | 1.0 | 7.0 |
| | 8 mm | 18 | 1.8 | 13.0 |
| | 12 mm | 21 | 2.1 | 15.0 |
| | 14 mm | 23 | 2.3 | 16.5 |
| | 16 mm | 35 | 3.5 | 25.5 |
| Oil hose union bolt | | 26 | 2.6 | 19.0 |
| Engine mounting bolt | | 79 | 7.9 | 57.0 |
| Engine mounting bracket bolt | | 23 | 2.3 | 16.5 |
| Frame mounting bolt/nut | | 50 | 5.0 | 36.0 |
| Exhaust pipe clamp bolt | | 23 | 2.3 | 16.5 |
| Muffler mounting bolt | | 23 | 2.3 | 16.5 |
| Speed sensor rotor bolt | | 100 | 10.0 | 72.5 |
| Spark plug | | 18 | 1.8 | 13.0 |

## SECONDARY AND FINAL

| ITEM | | N·m | kg-m | lb-ft |
|---|---|---|---|---|
| Secondary drive bevel gear bearing retainer | | 23 | 2.3 | 16.5 |
| Secondary driven bevel gear bolt | | 23 | 2.3 | 16.5 |
| Secondary driven bevel gear bearing stopper | | 105 | 10.5 | 76.0 |
| Final gear case mounting nut | | 40 | 4.0 | 29.0 |
| Final drive bevel gear coupling nut | | 100 | 10.0 | 72.5 |
| Final drive bevel gear bearing stopper | | 110 | 11.0 | 79.5 |
| Final gear case oil drain plug | | 23 | 2.3 | 16.5 |
| Final gear case bolt | 8 mm | 23 | 2.3 | 16.5 |
| | 10 mm | 50 | 5.0 | 36.0 |
| Final driven bevel gear bearing retainer screw | | 9 | 0.9 | 6.5 |

## CHASSIS

| ITEM | N·m | kg-m | lb-ft |
|---|---|---|---|
| Front axle | 65 | 6.5 | 47.0 |
| Front axle pinch bolt | 23 | 2.3 | 16.5 |
| Brake disc bolt (Front and Rear) | 23 | 2.3 | 16.5 |
| Front fork cap bolt | 90 | 9.0 | 65.0 |
| Front fork spring stopper nut | 35 | 3.5 | 25.5 |
| Front fork damper rod bolt | 20 | 2.0 | 14.5 |
| Front fork lower clamp bolt | 23 | 2.3 | 16.5 |
| Steering stem head nut | 90 | 9.0 | 65.0 |
| Front master cylinder mounting bolt | 10 | 1.0 | 7.0 |
| Front brake caliper mounting bolt | 35 | 3.5 | 25.5 |
| Front brake caliper housing bolt | 33 | 3.3 | 24.0 |
| Brake hose union bolt | 23 | 2.3 | 16.5 |
| Front brake hose joint nut | 15 | 1.5 | 11.0 |
| Front brake hose adaptor | 23 | 2.3 | 16.5 |
| Air bleeder valve | 7.5 | 0.75 | 5.5 |
| Handlebar set bolt | 16 | 1.6 | 11.5 |
| Handlebar holder nut | 50 | 5.0 | 36.0 |
| Front footrest bolt | 50 | 5.0 | 36.0 |
| Rear brake master cylinder rod lock nut | 18 | 1.8 | 13.0 |
| Rear brake master cylinder mounting bolt | 10 | 1.0 | 7.0 |
| Rear brake pedal bolt | 16 | 1.6 | 11.5 |
| Gearshift pedal bolt | 16 | 1.6 | 11.5 |
| Clutch master cylinder mounting bolt | 10 | 1.0 | 7.0 |
| Clutch hose union bolt | 23 | 2.3 | 16.5 |
| Clutch hose flare nut | 14 | 1.4 | 10.0 |
| Rear swingarm pivot bolt (Left) | 100 | 10.0 | 72.5 |
| Rear swingarm pivot bolt (Right) | 9.5 | 0.95 | 7.0 |
| Rear swingarm pivot bolt lock nut | 100 | 10.0 | 72.5 |
| Rear shock absorber mounting nut (Upper and Lower) | 50 | 5.0 | 36.0 |
| Rear cushion lever/rod mounting nut | 135 | 13.5 | 97.5 |
| Rear axle nut | 110 | 11.0 | 79.5 |
| Rear caliper mounting bracket bolt/nut | 60 | 6.0 | 43.5 |
| Rear brake caliper mounting bolt | 35 | 3.5 | 25.5 |
| Rear brake caliper housing bolt | 33 | 3.3 | 24.0 |
| Driven joint stopper bolt | 10 | 1.0 | 7.0 |
| Frame handle grip mounting bolt | 50 | 5.0 | 36.0 |
| Fuel vapor separator/fuel shut-off valve mounting bolt | 4 | 0.4 | 3.0 |
| Fuel level gauge mounting bolt | 4 | 0.4 | 3.0 |
| Fuel inlet hose clamp | 2 | 0.2 | 1.5 |

# TIGHTENING TORQUE CHART

For other bolts and nuts listed previously, refer to this chart:

| Bolt Diameter Ⓐ (mm) | Conventional or "4" marked bolt | | | "7" marked bolt | | |
|---|---|---|---|---|---|---|
| | N·m | kg-m | lb-ft | N·m | kg-m | lb-ft |
| 4 | 1.5 | 0.15 | 1.0 | 2 | 0.2 | 1.5 |
| 5 | 3 | 0.3 | 2.0 | 5 | 0.5 | 3.5 |
| 6 | 6 | 0.6 | 4.5 | 10 | 1.0 | 7.0 |
| 8 | 13 | 1.3 | 9.5 | 23 | 2.3 | 16.5 |
| 10 | 29 | 2.9 | 21.0 | 50 | 5.0 | 36.0 |
| 12 | 45 | 4.5 | 32.5 | 85 | 8.5 | 61.5 |
| 14 | 65 | 6.5 | 47.0 | 135 | 13.5 | 97.5 |
| 16 | 105 | 10.5 | 76.0 | 210 | 21.0 | 152.0 |
| 18 | 160 | 16.0 | 115.5 | 240 | 24.0 | 173.5 |

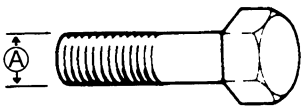


Conventional bolt

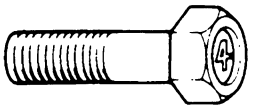


"4" marked bolt

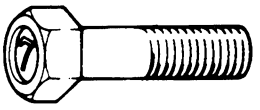


"7" marked bolt

# SERVICE DATA

## VALVE + GUIDE

Unit: mm (in)

| ITEM | STANDARD | | LIMIT |
|---|---|---|---|
| Valve diam. | IN. | 33 (1.3) | ——— |
| | EX. | 40 (1.6) | ——— |
| Lash-adjuster plunger stroke | 0–0.5 (0–0.02) | | ——— |
| Valve guide to valve stem clearance | IN. | 0.010–0.037 (0.0004–0.0015) | ——— |
| | EX. | 0.040–0.070 (0.0016–0.0028) | ——— |
| Valve stem deflection | IN. & EX. | ——— | 0.35 (0.014) |
| Valve guide I.D. | IN. | 5.500–5.512 (0.2165–0.2170) | ——— |
| | EX. | 7.000–7.015 (0.2756–0.2762) | ——— |
| Valve stem O.D. | IN. | 5.475–5.490 (0.2156–0.2161) | ——— |
| | EX. | 6.945–6.960 (0.2734–0.2740) | ——— |
| Valve stem runout | IN. & EX. | ——— | 0.05 (0.002) |
| Valve head thickness | IN. & EX. | ——— | 0.5 (0.02) |
| Valve stem end length | IN. | ——— | 2.5 (0.10) |
| | EX. | ——— | 2.2 (0.09) |
| Valve seat width | IN. | 0.9–1.1 (0.035–0.043) | ——— |
| | EX. | 1.0–1.2 (0.039–0.047) | ——— |
| Valve head radial runout | IN. & EX. | ——— | 0.03 (0.001) |
| Valve spring free length (INTAKE) | INNER | ——— | 35.0 (1.38) |
| | OUTER | ——— | 37.8 (1.49) |
| Valve spring free length (EXHAUST) | ——— | | 40.6 (1.60) |
| Valve spring tension (INTAKE) | INNER | 5.3–6.5 kg (11.68–14.33 lbs) at length 28.0 mm (1.10 in) | ——— |
| | OUTER | 14.0–14.2 kg (30.86–31.31 lbs) at length 31.5 mm (1.24 in) | ——— |
| Valve spring tension (EXHAUST) | 20.3–23.3 kg (44.75–51.37 lbs) at length 35.0 mm (1.38 in) | | ——— |

## CAMSHAFT + CYLINDER HEAD

Unit: mm (in)

| ITEM | STANDARD | | LIMIT |
|---|---|---|---|
| Cam height | IN. | 35.680–35.730 (1.4047–1.4067) | 35.38 (1.393) |
| | EX. | 36.880–36.930 (1.4521–1.4537) | 36.58 (1.440) |
| Camshaft journal oil clearance | IN. & EX. | 0.032–0.066 (0.0013–0.0026) | 0.150 (0.0060) |
| Camshaft journal holder I.D. | Front head right side, rear head left side | 20.012–20.025 (0.7879–0.7884) | ——— |
| | Front head left side, rear head right side | 25.012–25.025 (0.9847–0.9852) | ——— |
| Camshaft journal O.D. | Front head right side, rear head left side | 19.959–19.980 (0.7858–0.7866) | ——— |
| | Front head left side, rear head right side | 24.959–24.980 (0.9826–0.9835) | ——— |
| Camshaft runout | Front & Rear | ——— | 0.10 (0.004) |
| Rocker arm I.D. | IN. | 14.000–14.018 (0.5511–0.5519) | ——— |
| | EX. | 16.000–16.018 (0.6299–0.6303) | ——— |
| Rocker arm shaft O.D. | IN. | 13.966–13.984 (0.5498–0.5506) | ——— |
| | EX. | 15.966–15.984 (0.6286–0.6293) | ——— |
| Cylinder head distortion | ——— | | 0.05 (0.002) |
| Cylinder head cover distortion | ——— | | 0.05 (0.002) |

## CYLINDER + PISTON + PISTON RING

Unit: mm (in)

| ITEM | STANDARD | | | LIMIT |
|---|---|---|---|---|
| Compression pressure (Automatic de-compression actuated) | 1 000–1 400 kPa (10–14 kg/cm$^2$ 142–199 psi) | | | 800 kPa (8 kg/cm$^2$ 114 psi) |
| Compression pressure difference | ——— | | | 200 kPa (2 kg/cm$^2$ 28 psi) |
| Piston to cylinder clearance | 0.02–0.03 (0.0008–0.0012) | | | 0.120 (0.0047) |
| Cylinder bore | 96.000–96.015 (3.7795–3.7801) | | | Nicks or Scratches |
| Piston diam. | 95.975–95.990 (3.7785–3.7791) Measure at 16 mm (0.6 in) from the skirt end. | | | 95.88 (37.7748) |
| Cylinder distortion | ——— | | | 0.05 (0.002) |
| Piston ring free end gap | 1st | T | Approx. 13.5 (0.53) | 10.8 (0.43) |
| | 2nd | T | Approx. 14.0 (0.55) | 11.2 (0.44) |

| ITEM | STANDARD | | LIMIT |
|---|---|---|---|
| Piston ring end gap | 1st | 0.30–0.45 (0.012–0.018) | 0.70 (0.028) |
| | 2nd | 0.45–0.60 (0.018–0.024) | 1.00 (0.039) |
| Piston ring to groove clearance | 1st | ——— | 0.180 (0.007) |
| | 2nd | ——— | 0.150 (0.006) |
| Piston ring groove width | 1st | 1.210–1.230 (0.0476–0.0484) | ——— |
| | 2nd | 1.510–1.530 (0.0594–0.0602) | ——— |
| | Oil | 2.810–2.830 (0.1106–0.1114) | ——— |
| Piston ring thickness | 1st | 1.160–1.175 (0.0457–0.0463) | ——— |
| | 2nd | 1.470–1.490 (0.0579–0.0587) | ——— |
| Piston pin bore | 23.002–23.008 (0.9056–0.9058) | | 23.030 (0.9067) |
| Piston pin O.D. | 22.992–23.000 (0.9052–0.9055) | | 22.980 (0.9047) |

## CONROD + CRANKSHAFT

Unit: mm (in)

| ITEM | STANDARD | LIMIT |
|---|---|---|
| Conrod small end I.D. | 23.015–23.023 (0.9061–0.9064) | 23.040 (0.9071) |
| Conrod big end side clearance | 0.10–0.20 (0.004–0.008) | 0.3 (0.012) |
| Conrod big end width | 21.95–22.00 (0.864–0.866) | ——— |
| Crank pin width | 22.10–22.15 (0.870–0.872) | ——— |
| Conrod big end oil clearance | 0.024–0.042 (0.0009–0.0017) | 0.080 (0.0031) |
| Crank pin O.D. | 49.982–50.000 (1.9678–1.9685) | ——— |
| Crankshaft journal oil clearance | 0.020–0.050 (0.0008–0.0020) | 0.080 (0.0031) |
| Crankshaft journal O.D. | 51.965–51.980 (2.0459–2.0465) | ——— |
| Crankshaft journal I.D. | 52.000–52.015 (2.0472–2.0478) | ——— |
| Crankshaft thrust bearing thickness | 1.925–2.175 (0.0758–0.0856) | ——— |
| Crankshaft thrust clearance | 0.05–0.10 (0.002–0.004) | ——— |
| Crankshaft runout | ——— | 0.05 (0.002) |

## OIL PUMP

| ITEM | STANDARD | LIMIT |
|---|---|---|
| Oil pump reduction ratio | 1.154 (76/51 × 31/40) | ——— |
| Oil pressure (at 60°C, 140°F) | Above 350 kPa (3.5 kg/cm$^2$, 50 psi)<br>Below 650 kPa (6.5 kg/cm$^2$, 92 psi)<br>at 3 000 r/min. | ——— |

## CLUTCH

Unit: mm (in)

| ITEM | STANDARD | LIMIT |
|---|---|---|
| Drive plate thickness | 2.90–3.10<br>(0.114–0.122) | 2.60<br>(0.102) |
| Drive plate claw width | 15.6–15.8<br>(0.614–0.622) | 14.8<br>(0.583) |
| Driven plate distortion | ——— | 0.10<br>(0.004) |
| Clutch spring free length | ——— | 30.9<br>(1.22) |
| Clutch master cylinder bore | 14.000–14.043<br>(0.5512–0.5529) | ——— |
| Clutch master cylinder piston diam. | 13.957–13.984<br>(0.5495–0.5506) | ——— |
| Clutch release cylinder bore | 33.600–33.662<br>(1.3228–1.3253) | ——— |
| Clutch release cylinder piston diam. | 33.550–33.575<br>(1.3209–1.3218) | ——— |

## TRANSMISSION

Unit: mm (in) Except ratio

| ITEM | | STANDARD | LIMIT |
|---|---|---|---|
| Primary reduction ratio | | 1.490 (76/51) | ——— |
| Secondary reduction ratio | | 0.852 (29/34) | ——— |
| Final reduction ratio | | 2.666 (19/19 × 32/12) | ——— |
| Gear ratios | Low | 3.000 (36/12) | ——— |
| | 2nd | 1.823 (31/17) | ——— |
| | 3rd | 1.333 (28/21) | ——— |
| | 4th | 1.041 (25/24) | ——— |
| | Top | 0.884 (23/26) | ——— |
| Shift fork to groove clearance | | 0.1–0.3<br>(0.004–0.012) | 0.5<br>(0.020) |
| Shift fork groove width | | 5.50–5.60<br>(0.217–0.220) | ——— |
| Shift fork thickness | | 5.30–5.40<br>(0.209–0.213) | ——— |
| Damper spring free length | | ——— | 88.4<br>(3.48) |
| Gearshift lever height | | 82<br>(3.23) | ——— |

## SHAFT DRIVE

Unit: mm (in)

| ITEM | STANDARD | LIMIT |
|---|---|---|
| Secondary bevel gear backlash | 0.03–0.15<br>(0.001–0.006) | |
| Final bevel gear backlash | 0.03–0.64<br>(0.001–0.025) | |

## CARBURETOR

| ITEM | SPECIFICATION | |
|---|---|---|
| | E-02, 04, 25, 34 | E-03, 28 |
| Carburetor type | BDSR36 | ← |
| Bore size | 36.5 mm | ← |
| I.D. No. | 10F0 | 10F1 |
| Idle r/min. | 1 000 ± 100 r/min. | ← |
| Float height | 7.0 ± 0.5 mm<br>(0.28 ± 0.02 in) | ← |
| Main jet (M.J.) | F: #112.5<br>R: #110 | F: #112.5<br>R: #110 |
| Jet needle (J.N.) | F: 5D94-56-3<br>R: 5E8-56-3 | F: 5D95-56<br>R: 5E9-56 |
| Needle jet (N.J.) | P-0 | P-0M |
| Throttle valve (Th.V.) | #90 | ← |
| Pilot jet (P.J.) | #32.5 | #32.5 |
| Pilot screw (P.S.) | PRE-SET<br>(F: 2 turns back<br>R: 2 turns back) | PRE-SET<br>(F: $2^1/_4$ turns back<br>R: $2^1/_8$ turns back) |
| Throttle cable play | 2.0–4.0 mm<br>(0.08–0.16 in) | ← |

## CARBURETOR

| ITEM | SPECIFICATION | |
|---|---|---|
| | E-17, 22, 24 | E-18 |
| Carburetor type | BDSR36 | ← |
| Bore size | 36.5 mm | ← |
| I.D. No. | 10F2 | 10F3 |
| Idle r/min. | 1 000 ± 100 r/min. | 1 000 ± 50 r/min. |
| Float height | 7.0 ± 0.5 mm<br>(0.28 ± 0.02 in) | ← |
| Main jet (M.J.) | F: #112.5<br>R: #110 | ← |
| Jet needle (J.N.) | F: 5D94-56-3<br>R: 5E8-56-3 | ← |
| Needle jet (N.J.) | P-0 | ← |
| Throttle valve (Th.V.) | #90 | ← |
| Pilot jet (P.J.) | #32.5 | ← |
| Pilot screw (P.S.) | PRE-SET<br>(F: 2 turns back<br>R: 2 turns back) | PRE-SET<br>(F: $2^1/_2$ turns back<br>R: $2^5/_8$ turns back) |
| Throttle cable play | 2.0–4.0 mm<br>(0.08–0.16 in) | ← |

## CARBURETOR

| ITEM | SPECIFICATION |
|---|---|
| | E-33 |
| Carburetor type | BDSR36 |
| Bore size | 36.5 mm |
| I.D. No. | 10F4 |
| Idle r/min. | 1 000 ± 100 r/min. |
| Float height | 7.0 ± 0.5 mm<br>(0.28 ± 0.02 in) |
| Main jet (M.J.) | F: #112.5<br>R: #110 |
| Jet needle (J.N.) | F: 5D95-56<br>R: 5E9-56 |
| Needle jet (N.J.) | P-0M |
| Throttle valve (Th.V.) | #90 |
| Pilot jet (P.J.) | #32.5 |
| Pilot screw (P.S.) | PRE-SET |
| Throttle cable play | 2.0–4.0 mm<br>(0.08–0.16 in) |

## ELECTRICAL

Unit: mm (in)

| ITEM | SPECIFICATION | | NOTE |
|---|---|---|---|
| Ignition timing | 2° B.T.D.C. at 1 000 r/min. | | |
| Firing order | R·F | | |
| Spark plug | Type | NGK: DPR7EA-9<br>DENSO: X22EPR-U9 | |
| | Gap | 0.8–0.9<br>(0.031–0.035) | |
| Spark performance | Over 8 (0.3) at 1 atm. | | |
| Signal coil resistance | 178–242 Ω | | Bl–G |
| Signal coil peak voltage | More than 2.4 V | | |
| Ignition coil resistance | Primary | 1–7 Ω | ⊕ tap–⊖ tap |
| | Secondary | 18–28 kΩ | Plug cap–⊕ tap |
| Ignition coil primary peak voltage | Front | More than 190 V | B/Y–Ground |
| | Rear | More than 200 V | W–Ground |
| Generator Max. output | Approx. 340 W at 5 000 r/min. | | |
| Generator no-load voltage (when engine is cold) | More than 80 V (AC) at 5 000 r/min. | | |
| Regulated voltage | 13.5–15.0 V at 5 000 r/min. | | |
| Starter relay resistance | 3–6 Ω | | |
| De-comp. solenoid resistance | 0.1–1.0 Ω | | |
| Fuel pump resistance | 1–2.5 Ω | | |
| Fuel pump discharge amount | More than 600 ml (1.27US qt)/minute | | |

| ITEM | | | SPECIFICATION | NOTE |
|---|---|---|---|---|
| Battery | Type designation | | FTH 16–BS-1 | |
| | Voltage | | 12 V | |
| | Capacity | | 50.4 kC (14 Ah)/10HR | |
| | Standard electrolyte S.G. | | 1.320 at 20°C (68°F) | |
| Fuse size | Headlight | HI | 15A | |
| | | LO | 15A | |
| | Signal | | 15A | |
| | Ignition | | 10A | |
| | Main | | 30A | |
| | Power source | | 10A | |

## WATTAGE

Unit: W

| ITEM | | SPECIFICATION | | |
|---|---|---|---|---|
| | | E-03, 28, 33 | E-24 | Others |
| Headlight | HI | 60 | ← | ← |
| | LO | 55 | ← | ← |
| Position light | | | | 4 |
| Brake light/Taillight | | 21/5 | ← | ← |
| Turn signal light | | 21 | ← | ← |
| Running light | | 5 | | |
| Speedometer light | | 1.7 | ← | ← |
| Turn signal indicator light | | 1.7 | ← | ← |
| High beam indicator light | | 1.7 | ← | ← |
| Neutral indicator light | | 1.7 | ← | ← |
| Fuel level gauge light | | 1.7 | ← | ← |

## BRAKE + WHEEL

Unit: mm (in)

| ITEM | STANDARD | | LIMIT |
|---|---|---|---|
| Rear brake pedal height | 98 (3.86) | | |
| Brake disc thickness | Front | 5.8–6.2 (0.228–0.244) | 5.5 (0.22) |
| | Rear | 6.6–7.0 (0.260–0.276) | 6.3 (0.25) |
| Brake disc runout | | | 0.30 (0.012) |
| Master cylinder bore | Front | 12.700–12.743 (0.5000–0.5017) | |
| | Rear | 12.700–12.743 (0.5000–0.5017) | |
| Master cylinder piston diam. | Front | 12.657–12.684 (0.4983–0.4994) | |
| | Rear | 12.657–12.684 (0.4983–0.4994) | |

| ITEM | STANDARD | | LIMIT |
|---|---|---|---|
| Brake caliper cylinder bore | Front | 45.000–45.076 (1.7717–1.7746) | |
| | Rear | 42.850–42.926 (1.6870–1.6900) | |
| Brake caliper piston diam. | Front | 44.930–44.980 (1.7689–1.7709) | |
| | Rear | 42.770–42.820 (1.6839–1.6858) | |
| Wheel rim runout | Axial | | 2.0 (0.08) |
| | Radial | | 2.0 (0.08) |
| Wheel axle runout | Front | | 0.25 (0.010) |
| | Rear | | 0.25 (0.010) |
| Wheel rim size | Front | 16 × MT3.50 | |
| | Rear | 15M/C × MT5.00 | |
| Tire size | Front | 150/80-16 71H | |
| | Rear | 180/70-15M/C 76H | |
| Tire tread depth | Front | | 1.6 (0.06) |
| | Rear | | 2.0 (0.08) |

## SUSPENSION

Unit: mm (in)

| ITEM | STANDARD | LIMIT | NOTE |
|---|---|---|---|
| Front fork stroke | 140 (5.5) | | |
| Front fork spring free length | 585 (23.03) | 573 (22.56) | |
| Front fork oil level | 169.0 (6.65) | | |
| Rear shock absorber spring set length | 222.0 (8.74) | | |
| Rear wheel travel | 118 (4.6) | | |

## TIRE PRESSURE

| COLD INFLATION TIRE PRESSURE | SOLO RIDING | | | DUAL RIDING | | |
|---|---|---|---|---|---|---|
| | kPa | kgf/cm$^2$ | psi | kPa | kgf/cm$^2$ | psi |
| FRONT | 200 | 2.00 | 29 | 200 | 2.00 | 29 |
| REAR | 250 | 2.50 | 36 | 250 | 2.50 | 36 |

## FUEL + OIL

| ITEM | SPECIFICATION | | NOTE |
|---|---|---|---|
| Fuel type | Use only unleaded gasoline of at least 87 pump octane ( $\frac{R+M}{2}$ ) or 91 octane or higher rated by the research method. Gasoline containing MTBE (Methyl Tertiary Butyl Ether), less than 10% ethanol, or less than 5% methanol with appropriate cosolvents and corrosion inhibitor is permissible. | | E-03, 33 |
| | Use only unleaded gasoline of at least 87 pump octane ( $\frac{R+M}{2}$ method) or 91 octane or higher rated by the Research Method. | | E-28 |
| | Gasoline used should be graded 85–95 octane or higher. An unleaded gasoline is recommended. | | The others |
| Fuel tank | 15.5 L<br>(4.1/3.4 US/Imp gal) | | |
| Engine oil type | SAE 10W/40, API SF or SG | | |
| Engine oil capacity | Change | 3 700 ml<br>(3.9/3.3 US/Imp qt) | |
| | Filter change | 4 300 ml<br>(4.5/3.8 US/Imp qt) | |
| | Overhaul | 5 000 ml<br>(5.3/4.4 US/Imp qt) | |
| Front fork oil type | SUZUKI FORK OIL SS-08 (#10)<br>or equivalent fork oil | | |
| Front fork oil capacity (each leg) | 439 ml<br>(14.8/15.5 US/Imp oz) | | |
| Bevel gear oil type | Hypoid Gear oil #90 API GL-5 | | |
| Bevel gear oil capacity | Final | 200–220 ml<br>(6.8/7.0–7.4/7.7 US/Imp oz) | |
| Brake fluid type | DOT 4 | | |

# VL1500X/Y ('99, 2000-MODELS)

*This section describes service data and service specifications which differ from those of the VL1500W ( '98-MODEL).*

*Please refer to the sections 1 through 8 for details which are not given in this section.*

**CONTENTS**


**SPECIFICATIONS ..... 9- 1**
**SERVICE DATA ..... 9- 2**
**BRAKES ..... 9-11**
**FUEL LEVEL GAUGE ..... 9-11**
**SPEEDOMETER ..... 9-12**
**WIRING DIAGRAM ..... 9-13**
**FRONT BRAKE HOSE ROUTING ..... 9-16**
**REAR BRAKE HOSE ROUTING ..... 9-17**

# SPECIFICATIONS

## DIMENSIONS AND DRY MASS

| | |
|---|---|
| Overall length | 2 525 mm (99.4 in) |
| Overall width | 965 mm (38.0 in) |
| Overall height | 1 165 mm (45.9 in) |
| Wheelbase | 1 700 mm (66.9 in) |
| Ground clearance | 145 mm ( 5.7 in) |
| Seat height | 700 mm (27.6 in) |
| Dry mass | 296 kg (652 lbs) |

## ENGINE

| | |
|---|---|
| Type | 4-stroke, Air-cooled with SACS, OHC, Pent-roof |
| Number of cylinders | 2 |
| Bore | 96 mm (3.780 in) |
| Stroke | 101 mm (3.976 in) |
| Displacement | 1 462 $cm^3$ (89.2 cu. in) |
| Compression ratio | 8.5 : 1 |
| Carburetor | MIKUNI BDSR36, twin |
| Air cleaner | Non-woven fabric element |
| Starter system | Electric |
| Lubrication system | Wet sump |
| Idle speed | 950 – 1 050 r/min ..... E-18 |
| | 900 – 1 100 r/min ..... Others |

## TRANSMISSION

| | |
|---|---|
| Clutch | Wet multi-plate type |
| Transmission | 5-speed constant mesh |
| Gearshift pattern | 1-down, 4-up |
| Primary reduction ratio | 1.490 (76/51) |
| Final reduction ratio | 2.667 (19/19 × 32/12) |
| Secondary reduction ratio | 0.852 (29/34) |
| Gear ratios, Low | 3.000 (36/12) |
| 2nd | 1.823 (31/17) |
| 3rd | 1.333 (28/21) |
| 4th | 1.041 (25/24) |
| Top | 0.884 (23/26) |
| Drive system | Shaft drive |

## CHASSIS

| | |
|---|---|
| Front suspension | Telescopic, coil spring, oil damped |
| Rear suspension | Link type, gas/coil spring, oil damped, spring pre-load fully adjustable |
| Front suspension stroke | 140 mm (5.5 in) |
| Rear wheel travel | 118 mm (4.6 in) |
| Caster | 32° |
| Trail | 138 mm (5.43 in) |
| Steering angle | 37° (right & left) |
| Turning radius | 3.1 m (10.2 ft) |
| Front brake | Disk brake |
| Rear brake | Disk brake |
| Front tire size | 150/80-16 71H, tubeless |
| Rear tire size | 180/70-15 M/C 76H, tubeless |

## ELECTRICAL

| | |
|---|---|
| Ignition type | Electronic ignition (Transistorized) |
| Ignition timing | 2° B.T.D.C. at 1 000 r/min |
| Spark plug | NGK DPR7EA-9 or DENSO X22EPR-U9 |
| Battery | 12V 50.4 kC (14Ah)/10 HR |
| Generator | Three-phase A.C. generator |
| Main fuse | 30 A |
| Fuse | 15/15/15/10/10 A |
| Headlight | 12 V 60/55 W (H4) |
| Position/Parking light | 12 V 4 W ..... Except E-03, 24, 28, 33 |
| Brake light/Taillight | 12 V 21/5 W |
| Turn signal light | 12 V 21/5 W ..... E-03, 28, 33 |
| | 12 V 21 W ..... Others |
| Speedometer light | 12 V 0.84 W |
| Fuel level warning light | 12 V 1.7 W |
| Turn signal indicator light | 12 V 1.7 W |
| Neutral indicator light | 12 V 1.7 W |
| High beam indicator light | 12 V 1.7 W |
| Oil pressure indicator light | LED |

## CAPACITIES

| | |
|---|---|
| Fuel tank | 15.5 L (4.1/3.4 US/Imp gal) ..... X-MODEL |
| * | 15.0 L (4.0/3.3 US/Imp gal) ..... Y-MODEL |
| Engine oil, oil change | 3 700 ml (3.9/3.3 US/Imp qt) |
| with filter change | 4 300 ml (4.5/3.8 US/Imp qt) |
| overhaul | 5 000 ml (5.3/4.4 US/Imp qt) |
| Final gear oil | 200 – 220 ml (6.8/7.0 – 7.4/7.7 US/Imp oz) |
| Front fork oil (each leg) | 439 ml (14.8/15.5 US/Imp oz) |

# SERVICE DATA

## VALVE + GUIDE

Unit: mm (in)

| ITEM | STANDARD | | LIMIT |
|---|---|---|---|
| Valve diam. | IN. | 33<br>(1.3) | ——— |
| | EX. | 40<br>(1.6) | ——— |
| Lash-adjuster plunger stroke | 0 – 0.5<br>(0 – 0.02) | | ——— |
| Valve guide to valve stem clearance | IN. | 0.010 – 0.037<br>(0.0004 – 0.0015) | ——— |
| | EX. | 0.040 – 0.070<br>(0.0016 – 0.0028) | ——— |
| Valve stem deflection | IN. & EX. | ——— | 0.35<br>(0.014) |
| Valve guide I.D. | IN. | 5.500 – 5.512<br>(0.2165 – 0.2170) | ——— |
| | EX. | 7.000 – 7.015<br>(0.2756 – 0.2762) | ——— |
| Valve stem O.D. | IN. | 5.475 – 5.490<br>(0.2156 – 0.2161) | ——— |
| | EX. | 6.945 – 6.960<br>(0.2734 – 0.2740) | ——— |
| Valve stem runout | IN. & EX. | ——— | 0.05<br>(0.002) |
| Valve head thickness | IN. & EX. | ——— | 0.5<br>(0.02) |
| Valve stem end length | IN. | ——— | 2.5<br>(0.10) |
| | EX. | ——— | 2.2<br>(0.09) |
| Valve seat width | IN. | 0.9 – 1.1<br>(0.035 – 0.043) | ——— |
| | EX. | 1.0 – 1.2<br>(0.039 – 0.047) | ——— |
| Valve head radial runout | IN. & EX. | ——— | 0.03<br>(0.001) |
| Valve spring free length (INTAKE) | INNER | ——— | 35.0<br>(1.38) |
| | OUTER | ——— | 37.8<br>(1.49) |
| Valve spring free length (EXHAUST) | ——— | | 40.6<br>(1.60) |
| Valve spring tension (INTAKE) | INNER | 5.3 – 6.5 kgf<br>(11.68 – 14.33 lbs)<br>at length 28.0 mm (1.10 in) | ——— |
| | OUTER | 14.0 – 14.2 kgf<br>(30.86 – 31.31 lbs)<br>at length 31.5 mm (1.24 in) | ——— |
| Valve spring tension (EXHAUST) | 20.3 – 23.3 kgf<br>(44.75 – 51.37 lbs)<br>at length 35.0 mm (1.38 in) | | ——— |

## CAMSHAFT + CYLINDER HEAD

Unit: mm (in)

| ITEM | STANDARD | | LIMIT |
|---|---|---|---|
| Cam height | IN. | 35.680 – 35.730<br>(1.4047 – 1.4067) | 35.38<br>(1.393) |
| | EX. | 36.880 – 36.930<br>(1.4521 – 1.4537) | 36.58<br>(1.440) |
| Camshaft journal oil clearance | IN. & EX. | 0.032 – 0.066<br>(0.0013 – 0.0026) | 0.150<br>(0.0060) |
| Camshaft journal holder I.D. | Front head right side,<br>rear head left side | 20.012 – 20.025<br>(0.7879 – 0.7884) | ——— |
| | Front head left side,<br>rear head right side | 25.012 – 25.025<br>(0.9847 – 0.9852) | ——— |
| Camshaft journal O.D. | Front head right side,<br>rear head left side | 19.959 – 19.980<br>(0.7858 – 0.7866) | ——— |
| | Front head left side,<br>rear head right side | 24.959 – 24.980<br>(0.9826 – 0.9835) | ——— |
| Camshaft runout | Front & Rear | ——— | 0.10<br>(0.004) |
| Rocker arm I.D. | IN. | 14.000 – 14.018<br>(0.5511 – 0.5519) | ——— |
| | EX. | 16.000 – 16.018<br>(0.6299 – 0.6303) | ——— |
| Rocker arm shaft O.D. | IN. | 13.966 – 13.984<br>(0.5498 – 0.5506) | ——— |
| | EX. | 15.966 – 15.984<br>(0.6286 – 0.6293) | ——— |
| Cylinder head distortion | ——— | | 0.05<br>(0.002) |
| Cylinder head cover distortion | ——— | | 0.05<br>(0.002) |

## CYLINDER + PISTON + PISTON RING

Unit: mm (in)

| ITEM | STANDARD | | | LIMIT |
|---|---|---|---|---|
| Campression pressure<br>(Automatic de-compression actuated) | 1 000 – 1 400 kPa<br>(10 – 14 kgf/cm$^2$<br>142 – 199 psi) | | | 800 kPa<br>(8 kgf/cm$^2$<br>144 psi) |
| Campression pressure difference | ——— | | | 200 kPa<br>(2 kgf/cm$^2$<br>28 psi) |
| Piston to cylinder clearance | 0.02 – 0.03<br>(0.0008 – 0.0012) | | | 0.120<br>(0.0047) |
| Cylinder bore | 96.000 – 96.015<br>(3.7795 – 3.7801) | | | Nicks or<br>Scratches |
| Piston diam. | 95.975 – 95.990<br>(3.7785 – 3.7791)<br>Measure at 16 mm (0.6 in) from the skirt end. | | | 95.88<br>(37.7748) |
| Cylinder distortion | ——— | | | 0.05<br>(0.002) |
| Piston ring free end gap | 1st | T | Approx. 13.5<br>(0.53) | 10.8<br>(0.43) |
| | 2nd | T | Approx. 14.0<br>(0.55) | 11.2<br>(0.44) |

| ITEM | STANDARD | | LIMIT |
|---|---|---|---|
| Piston ring end gap | 1st | 0.30 – 0.45<br>(0.012 – 0.018) | 0.70<br>(0.028) |
| | 2nd | 0.45 – 0.60<br>(0.018 – 0.024) | 1.00<br>(0.039) |
| Piston ring to groove clearance | 1st | ——— | 0.180<br>(0.007) |
| | 2nd | ——— | 0.150<br>(0.006) |
| Piston ring groove width | 1st | 1.210 – 1.230<br>(0.0476 – 0.0484) | ——— |
| | 2nd | 1.510 – 1.530<br>(0.0594 – 0.0602) | ——— |
| | Oil | 2.810 – 2.830<br>(0.1106 – 0.1114) | ——— |
| Piston ring thickness | 1st | 1.160 – 1.175<br>(0.0457 – 0.0463) | ——— |
| | 2nd | 1.470 – 1.490<br>(0.0579 – 0.0587) | ——— |
| Piston pin bore | 23.002 – 23.008<br>(0.9056 – 0.9058) | | 23.030<br>(0.9067) |
| Piston pin O.D. | 22.992 – 23.000<br>(0.9052 – 0.9055) | | 22.980<br>(0.9047) |

## CONROD + CRANKSHAFT

Unit: mm (in)

| ITEM | STANDARD | LIMIT |
|---|---|---|
| Conrod small end I.D. | 23.015 – 23.023<br>(0.9061 – 0.9064) | 23.040<br>(0.9071) |
| Conrod big end side clearance | 0.10 – 0.20<br>(0.004 – 0.008) | 0.3<br>(0.012) |
| Conrod big end width | 21.95 – 22.00<br>(0.864 – 0.866) | ——— |
| Crank pin width | 22.10 – 22.15<br>(0.870 – 0.872) | ——— |
| Conrod big end oil clearance | 0.024 – 0.042<br>(0.0009 – 0.0017) | 0.080<br>(0.0031) |
| Crank pin O.D. | 49.982 – 50.000<br>(1.9678 – 1.9685) | ——— |
| Crankshaft journal oil clearance | 0.020 – 0.050<br>(0.0008 – 0.0020) | 0.080<br>(0.0031) |
| Crankshaft journal O.D. | 51.965 – 51.980<br>(2.0459 – 2.0465) | ——— |
| Crankshaft journal I.D. | 52.000 – 52.015<br>(2.0472 – 2.0478) | ——— |
| Crankshaft thrust bearing thickness | 1.925 – 2.175<br>(0.0758 – 0.0856) | ——— |
| Crankshaft thrust clearance | 0.05 – 0.10<br>(0.002 – 0.004) | ——— |
| Crankshaft runout | ——— | 0.05<br>(0.002) |

## OIL PUMP

| ITEM | STANDARD | LIMIT |
|---|---|---|
| Oil pump reduction ratio | 1.154 (76/51 × 31/40) | ——— |
| Oil pressure (at 60°C, 140°F) | Above 350 kPa (3.5 kgf/cm$^2$, 50 psi)<br>Below 650 kPa (6.5 kgf/cm$^2$, 92 psi)<br>at 3 000 r/min. | ——— |

## CLUTCH

Unit: mm (in)

| ITEM | STANDARD | LIMIT |
|---|---|---|
| Drive plate thickness | 2.90 – 3.10<br>(0.114 – 0.122) | 2.60<br>(0.102) |
| Drive plate claw width | 15.6 – 15.8<br>(0.614 – 0.622) | 14.8<br>(0.583) |
| Driven plate distortion | ——— | 0.10<br>(0.004) |
| Clutch spring free length | ——— | 30.9<br>(1.22) |
| Clutch master cylinder bore | 14.000 – 14.043<br>(0.5512 – 0.5529) | ——— |
| Clutch master cylinder piston diam. | 13.957 – 13.984<br>(0.5495 – 0.5506) | ——— |
| Clutch release cylinder bore | 33.600 – 33.662<br>(1.3228 – 1.3253) | ——— |
| Clutch release cylinder piston diam. | 33.550 – 33.575<br>(1.3209 – 1.3218) | ——— |

## TRANSMISSION

Unit: mm (in) Except ratio

| ITEM | | STANDARD | LIMIT |
|---|---|---|---|
| Primary reduction ratio | | 1.490 (76/51) | ——— |
| Secondary reduction ratio | | 0.852 (29/34) | ——— |
| Final reduction ratio | | 2.667 (19/19 × 32/12) | ——— |
| Gear ratios | Low | 3.000 (36/12) | ——— |
| | 2nd | 1.823 (31/17) | ——— |
| | 3rd | 1.333 (28/21) | ——— |
| | 4th | 1.041 (25/24) | ——— |
| | Top | 0.884 (23/26) | ——— |
| Shift fork to groove clearance | | 0.1 – 0.3<br>(0.004 – 0.012) | 0.5<br>(0.020) |
| Shift fork groove width | | 5.50 – 5.60<br>(0.217 – 0.220) | ——— |
| Shift fork thickness | | 5.30 – 5.40<br>(0.209 – 0.213) | ——— |
| Damper spring free length | | ——— | 73.6<br>(2.90) |
| Gearshift lever height | | 82<br>(3.23) | ——— |

## SHAFT DRIVE

Unit: mm (in)

| ITEM | STANDARD | LIMIT |
|---|---|---|
| Secondary bevel gear backlash | 0.03 – 0.15<br>(0.001 – 0.006) | ——— |
| Final bevel gear backlash | 0.03 – 0.64<br>(0.001 – 0.025) | ——— |

## CARBURETOR

| ITEM | STANDARD | |
|---|---|---|
| | E-02, 04, 25, 34 | E-03, 28 |
| Carburetor type | BDSR36 | ← |
| Bore size | 36.5 mm | ← |
| I.D. No. | 10F0 | 10F1 |
| Idle r/min. | 1 000 ± 100 r/min. | ← |
| Float height | 7.0 ± 0.5 mm<br>(0.28 ± 0.02 in) | ← |
| Main jet (M.J.) | F: #112.5<br>R: #110 | F: #112.5<br>R: #110 |
| Jet needle (J.N.) | F: 5D94-56-3<br>R: 5E8-56-3 | F: 5D95-56<br>R: 5E9-56 |
| Needle jet (N.J.) | P-0 | P-0M |
| Throttle valve (Th.V.) | #90 | ← |
| Pilot jet (P.J.) | #32.5 | #32.5 |
| Pilot screw (P.S.) | PRE-SET<br>(F: 2 turns back<br>R: 2 turns back) | PRE-SET |
| Throttle cable play | 2.0 – 4.0 mm<br>(0.08 – 0.16 in) | ← |

## CARBURETOR

| ITEM | STANDARD | |
|---|---|---|
| | E-17, 22, 24 | E-18 |
| Carburetor type | BDSR36 | ← |
| Bore size | 36.5 mm | ← |
| I.D. No. | 10F2 | 10F3 |
| Idle r/min. | 1 000 ± 100 r/min. | 1 000 ± 50 r/min. |
| Float height | 7.0 ± 0.5 mm<br>(0.28 ± 0.02 in) | ← |
| Main jet (M.J.) | F: #112.5<br>R: #110 | ← |
| Jet needle (J.N.) | F: 5D94-56-3<br>R: 5E8-56-3 | ← |
| Needle jet (N.J.) | P-0 | ← |
| Throttle valve (Th.V.) | #90 | ← |
| Pilot jet (P.J.) | #32.5 | ← |
| Pilot screw (P.S.) | PRE-SET<br>(F: 2 turns back<br>R: 2 turns back) | PRE-SET<br>(F: 2 1/2 turns back<br>R: 2 5/8 turns back) |
| Throttle cable play | 2.0 – 4.0 mm<br>(0.08 – 0.16 in) | ← |

## CARBURETOR

| ITEM | STANDARD | |
|---|---|---|
| | E-33 | P-37 |
| Carburetor type | BDSR36 | ← |
| Bore size | 36.5 mm | ← |
| I.D. No. | 10F7 | 10F6 |
| Idle r/min. | 1 000 ± 100 r/min. | ← |
| Float height | 7.0 ± 0.5 mm<br>(0.28 ± 0.02 in) | ← |
| Main jet (M.J.) | F: #112.5<br>R: #110 | F: #112.5<br>R: #110 |
| Jet needle (J.N.) | F: 5D95-56<br>R: 5E9-56 | F: 5D94-56-3<br>R: 5E8-56-3 |
| Needle jet (N.J.) | P-0M | P-0 |
| Throttle valve (Th.V.) | # 90 | ← |
| Pilot jet (P.J.) | #32.5 | #32.5 |
| Pilot screw (P.S.) | PRE-SET | PRE-SET<br>F: 2 turns back<br>( R: 2 turns back ) |
| Throttle cable play | 2.0 – 4.0 mm<br>(0.08 – 0.16 in) | ← |

## ELECTRICAL

Unit: mm (in)

| ITEM | SPECIFICATION | | NOTE |
|---|---|---|---|
| Ignition timing | 2° B.T.D.C. at 1 000 r/min. | | |
| Firing order | R · F | | |
| Spark plug | Type | NGK: DPR7EA-9<br>DENSO: X22EPR-U9 | |
| | Gap | 0.8 – 0.9<br>(0.031 – 0.035) | |
| Spark performance | Over 8 (0.3) at 1 atm. | | |
| Signal coil resistance | 178 – 242 Ω | | Bl – G |
| Signal coil peak voltage | More than 2.4 V | | |
| Ignition coil resistance | Primary | 1 – 7 Ω | ⊕ tap – ⊖ tap |
| | Secondary | 18 – 28 kΩ | Plug cap – ⊕ tap |
| Ignition coil primary peak voltage | Front | More than 190 V | B/Y – Ground |
| | Rear | More than 200 V | W – Ground |
| Generator Max. output | Approx. 340 W at 5 000 r/min. | | |
| Generator no-load voltage (when engine is cold) | More than 80 V (AC) at 5 000 r/min. | | |
| Regulated voltage | 13.5 – 15.0 V at 5 000 r/min. | | |
| Starter relay resistance | 3 – 6 Ω | | |
| De-comp. solenoid resistance | 0.1 – 1.0 Ω | | |
| Fuel pump resistance | 1 – 2.5 Ω | | |
| Fuel pump discharge amount | More than 600 ml (1.27 US qt)/minute | | |

| ITEM | | | SPECIFICATION | NOTE |
|---|---|---|---|---|
| Battery | Type designation | | FTH16-BS-1 | |
| | Voltage | | 12 V | |
| | Capacity | | 50.4 kC (14 Ah)/10HR | |
| | Standard electrolyte S.G. | | 1.320 at 20°C (68°F) | |
| Fuse size | Headlight | HI | 15 A | |
| | | LO | 15 A | |
| | Signal | | 15 A | |
| | Ignition | | 10 A | |
| | Main | | 30 A | |
| | Power source | | 10 A | |

## WATTAGE

Unit: W

| ITEM | | SPECIFICATION | | |
|---|---|---|---|---|
| | | E-03, 28, 33 | E-24 | Others |
| Headlight | HI | 60 | ← | ← |
| | LO | 55 | ← | ← |
| Position light | | | | 4 |
| Brake light / Taillight | | 21/5 | ← | ← |
| Turn signal light | | 21 | ← | ← |
| Running light | | 5 | | |
| Speedometer light | | 0.84 | ← | ← |
| Turn signal indicator light | | 1.7 | ← | ← |
| High beam indicator light | | 1.7 | ← | ← |
| Neutral indicator light | | 1.7 | ← | ← |
| Fuel level warning light | | 1.7 | ← | ← |

## BRAKE + WHEEL

Unit: mm (in)

| ITEM | | STANDARD | LIMIT |
|---|---|---|---|
| Rear brake pedal height | | 98<br>(3.86) | ——— |
| Brake disc thickness | Front | 5.8 – 6.2<br>(0.228 – 0.244) | 5.5<br>(0.22) |
| | Rear | 6.6 – 7.0<br>(0.260 – 0.276) | 6.3<br>(0.25) |
| Brake disc runout | | ——— | 0.30<br>(0.012) |
| Master cylinder bore | Front | 12.700 – 12.743<br>(0.5000 – 0.5017) | ——— |
| | Rear | 12.700 – 12.743<br>(0.5000 – 0.5017) | ——— |
| Master cylinder piston diam. | Front | 12.657 – 12.684<br>(0.4983 – 0.4994) | ——— |
| | Rear | 12.657 – 12.684<br>(0.4983 – 0.4994) | ——— |

| ITEM | STANDARD | | LIMIT |
|---|---|---|---|
| Brake caliper cylinder bore | Front | 45.000 – 45.076<br>(1.7717 – 1.7746) | ——— |
| | Rear | 42.850 – 42.926<br>(1.6870 – 1.6900) | ——— |
| Brake caliper piston diam. | Front | 44.930 – 44.980<br>(1.7689 – 1.7709) | ——— |
| | Rear | 42.770 – 42.820<br>(1.6839 – 1.6858) | ——— |
| Wheel rim runout | Axial | ——— | 2.0<br>(0.08) |
| | Radial | ——— | 2.0<br>(0.08) |
| Wheel axle runout | Front | ——— | 0.25<br>(0.010) |
| | Rear | ——— | 0.25<br>(0.010) |
| Wheel rim size | Front | 16 × MT3.50 | ——— |
| | Rear | 15M/C × MT5.00 | ——— |
| Tire size | Front | 150/80-16 71H | ——— |
| | Rear | 180/70-15M/C 76H | ——— |
| Tire tread depth | Front | ——— | 1.6<br>(0.06) |
| | Rear | ——— | 2.0<br>(0.08) |

## SUSPENSION

Unit: mm (in)

| ITEM | STANDARD | LIMIT | NOTE |
|---|---|---|---|
| Front fork stroke | 140<br>(5.5) | ——— | |
| Front fork spring free length | 585<br>(23.03) | 573<br>(22.56) | |
| Front fork oil level | 169.0<br>(6.65) | ——— | |
| Rear shock absorber spring set length | 222.0<br>(8.74) | ——— | |
| Rear wheel travel | 118<br>(4.6) | ——— | |

## TIRE PRESSURE

| COLD INFLATION TIRE PRESSURE | SOLO RIDING | | | DUAL RIDING | | |
|---|---|---|---|---|---|---|
| | kPa | kgf/cm$^2$ | psi | kPa | kgf/cm$^2$ | psi |
| FRONT | 200 | 2.00 | 29 | 200 | 2.00 | 29 |
| REAR | 250 | 2.50 | 36 | 250 | 2.50 | 36 |

## FUEL + OIL

| ITEM | SPECIFICATION | | NOTE |
|---|---|---|---|
| Fuel type | Use only unleaded gasoline of at least 87 pump octane ($\frac{R+M}{2}$) or 91 octane or higher rated by the research method. Gasoline containing MTBE (Methyl Tertiary Butyl Ether), less than 10% ethanol, or less than 5% methanol with appropriate cosolvents and corrosion inhibitor is permissible. | | E-03, 33 |
| | Use only unleaded gasoline of at least 87 pump octane ($\frac{R+M}{2}$ method) or 91 octane or higher rated by the Research Method. | | E-28 |
| | Gasoline used should be graded 91 octane or higher. An unleaded gasoline is recommended. | | The others |
| Fuel tank | 15.5 L (4.1/3.4 US/Imp gal) | | X-MODEL |
| | *15.0 L (4.0/3.3 US/Imp gal) | | Y-MODEL |
| Engine oil type | SAE 10W/40, API SF or SG | | |
| Engine oil capacity | Change | 3 700 ml (3.9/3.3 US/Imp qt) | |
| | Filter change | 4 300 ml (4.5/3.8 US/Imp qt) | |
| | Overhaul | 5 000 ml (5.3/4.4 US/Imp qt) | |
| Fuel fork oil type | SUZUKI FORK OIL SS-08 (#10) or equivalent fork oil | | |
| Fuel fork oil capacity (each leg) | 439 ml (14.8/15.5 US/Imp oz) | | |
| Bevel gear oil type | Hypoid Gear oil #90 API GL-5 | | |
| Bevel gear oil capacity | Final | 200 – 220 ml (6.8/7.0 – 7.4/7.7 US/Imp oz) | |
| Brake fluid type | DOT 4 | | |

# BRAKES

## FRONT BRAKE CALIPER

- When reassembling the brake pad, install the pad shims as shown.

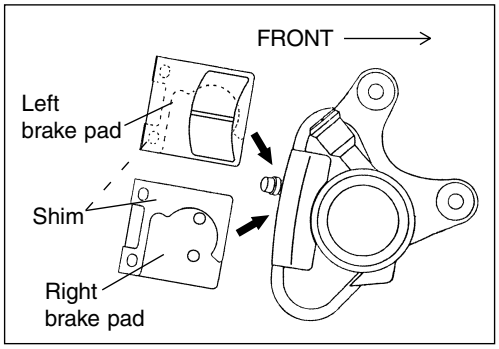


## REAR BRAKE CALIPER

- When reassembling the brake caliper, install the insulator ① into the right side piston.

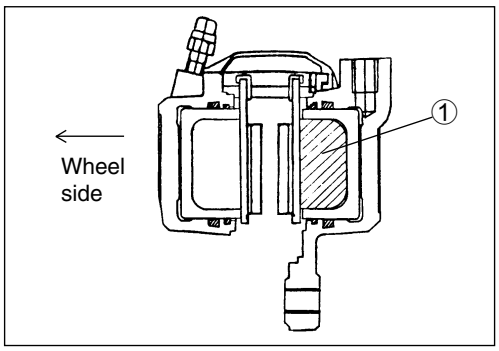


# FUEL LEVEL GAUGE

## INSPECTION

- Remove the fuel level gauge as the same manner of the W-model.
- Measure the resistance at each fuel level gauge float position.
- If the resistance is incorrect, replace the fuel level gauge with a new one.

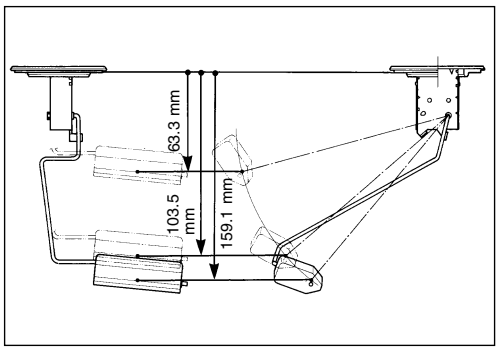


*NOTE:*
*The following table shows the relation between the float position of the fuel level gauge sending unit and the resistance.*

| Float position | Resistance |
|---|---|
| 63.3 mm (2.49 in) | 1 – 5 Ω |
| 103.5 mm (4.07 in) | 28.5 – 36.5 Ω |
| 159.1 mm (6.26 in) | 103 – 117 Ω |

# SPEEDOMETER

## FUEL LEVEL INDICATOR LIGHT AND FUEL LEVEL METER INSPECTION

To test the fuel level indicator light Ⓐ and the fuel level meter Ⓑ, perform the following procedure:
If the tests defect fuel level indicator malfunction or meter malfunction, replace the speedometer.

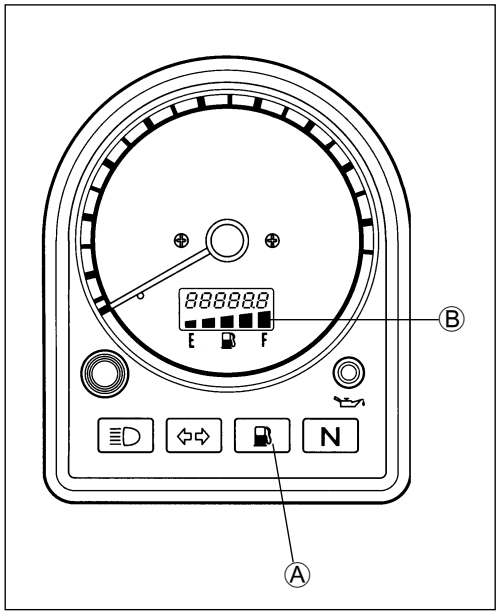


**Test 1.**

- Check if the fuel level indicator light comes on and the fuel level meter displays all segments for three seconds when ignition switch is turned on.

**Test 2.**

- Romove the seat.
- Disconnect the fuel level gauge lead wire coupler.
- Connect each resistor between the Y/B and B/W lead wire coming from main wiring harness.
- Turn on the ignition switch and wait for 13 seconds.
- Check if the fuel level indicator light and meter function as shown below.

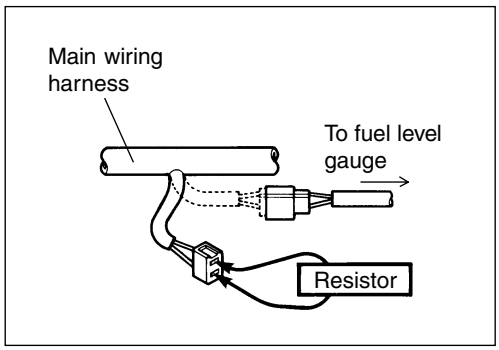


| Resistance | Less than 16 Ω | 20 – 34 Ω | 38 – 58 Ω | 62 – 87 Ω | 91 – 97 Ω | More than 103 Ω |
|---|---|---|---|---|---|---|
| Fuel level meter | | | | | | Flicker |
| Fuel level indicator light | OFF | OFF | OFF | OFF | ON | ON |

# WIRING DIAGRAM

## FOR E-02, 04, 17, 18 22, 25, 34 AND P-37

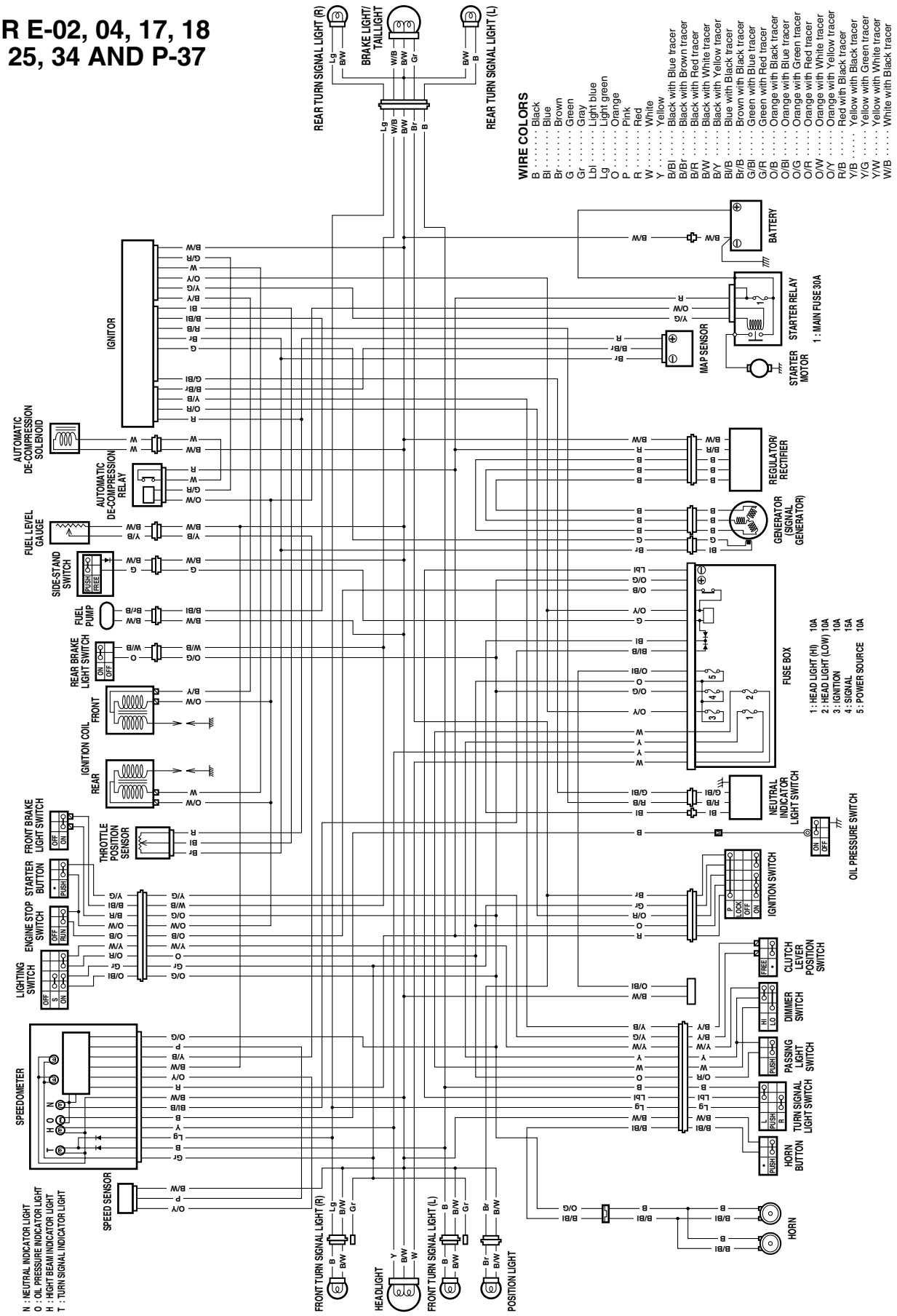

# FOR E-24

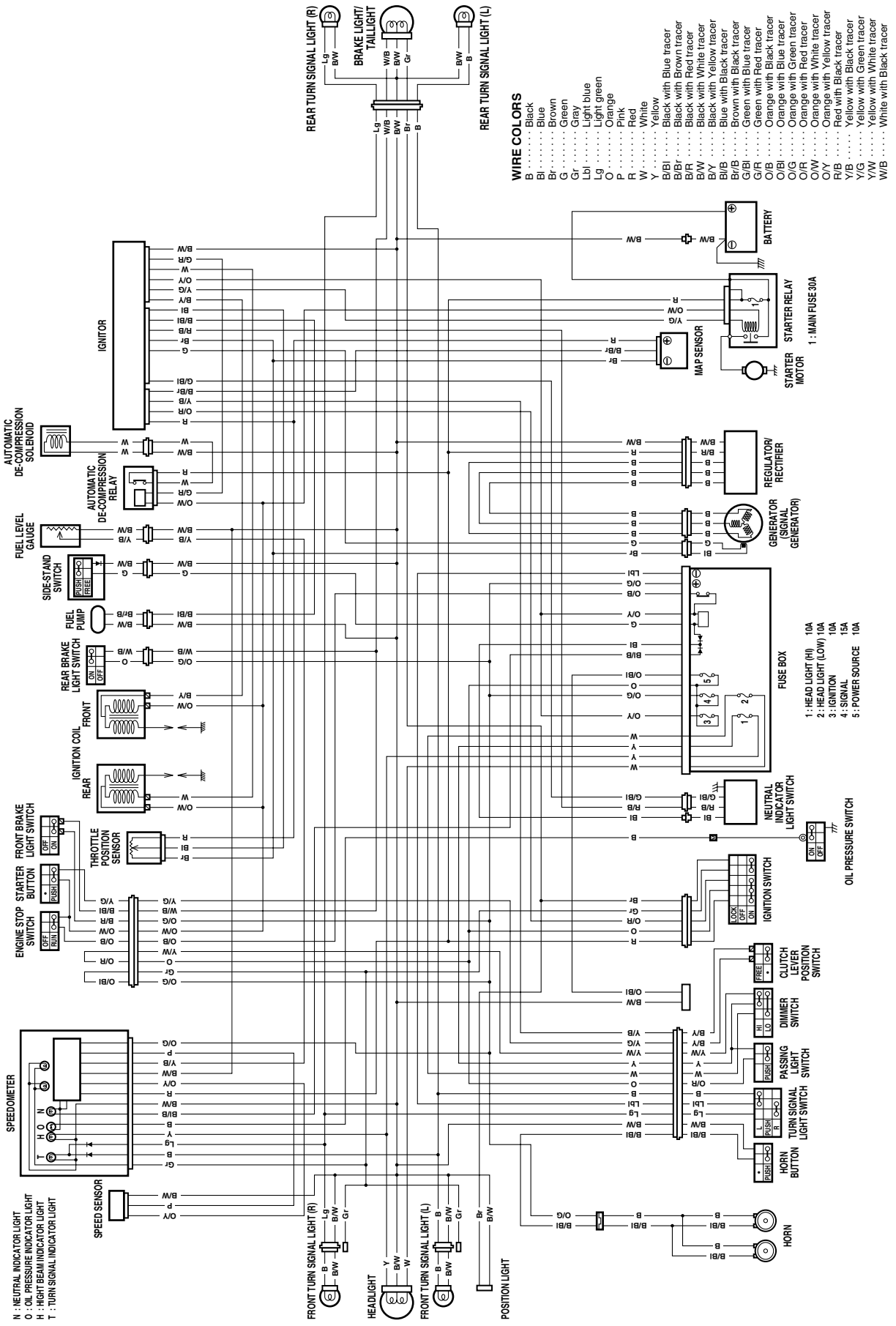
REAR TURN SIGNAL LIGHT (R)
BRAKE LIGHT/ TAILLIGHT
REAR TURN SIGNAL LIGHT (L)
WIRE COLORS
B . . . . . Black
Bl . . . . . Blue
Br . . . . . Brown
G . . . . . Green
Gr . . . . . Gray
Lbl . . . . . Light blue
Lg . . . . . Light green
O . . . . . Orange
P . . . . . Pink
R . . . . . Red
W . . . . . White
Y . . . . . Yellow
B/Bl . . . . . Black with Blue tracer
B/Br . . . . . Black with Brown tracer
B/R . . . . . Black with Red tracer
B/W . . . . . Black with White tracer
B/Y . . . . . Black with Yellow tracer
Bl/B . . . . . Blue with Black tracer
Br/B . . . . . Brown with Black tracer
G/Bl . . . . . Green with Blue tracer
G/R . . . . . Green with Red tracer
O/B . . . . . Orange with Black tracer
O/Bl . . . . . Orange with Blue tracer
O/G . . . . . Orange with Green tracer
O/R . . . . . Orange with Red tracer
O/W . . . . . Orange with White tracer
O/Y . . . . . Orange with Yellow tracer
R/B . . . . . Red with Black tracer
Y/B . . . . . Yellow with Black tracer
Y/G . . . . . Yellow with Green tracer
Y/W . . . . . Yellow with White tracer
W/B . . . . . White with Black tracer
BATTERY
STARTER RELAY
1 : MAIN FUSE 30A
STARTER MOTOR
MAP SENSOR
IGNITOR
REGULATOR/ RECTIFIER
GENERATOR (SIGNAL GENERATOR)
AUTOMATIC DE-COMPRESSION SOLENOID
AUTOMATIC DE-COMPRESSION RELAY
FUEL LEVEL GAUGE
SIDE-STAND SWITCH
FUEL PUMP
REAR BRAKE LIGHT SWITCH
IGNITION COIL
FRONT
REAR
FUSE BOX
1 : HEAD LIGHT (HI) 10A
2 : HEAD LIGHT (LOW) 10A
3 : IGNITION 10A
4 : SIGNAL 15A
5 : POWER SOURCE 10A
NEUTRAL INDICATOR LIGHT SWITCH
OIL PRESSURE SWITCH
FRONT BRAKE LIGHT SWITCH
THROTTLE POSITION SENSOR
STARTER BUTTON
ENGINE STOP SWITCH
IGNITION SWITCH
CLUTCH LEVER POSITION SWITCH
DIMMER SWITCH
PASSING LIGHT SWITCH
TURN SIGNAL LIGHT SWITCH
HORN BUTTON
SPEEDOMETER
SPEED SENSOR
HORN
N : NEUTRAL INDICATOR LIGHT
O : OIL PRESSURE INDICATOR LIGHT
H : HIGHT BEAM INDICATOR LIGHT
T : TURN SIGNAL INDICATOR LIGHT
FRONT TURN SIGNAL LIGHT (R)
HEADLIGHT
FRONT TURN SIGNAL LIGHT (L)
POSITION LIGHT

# FOR E-03, 28 AND 33

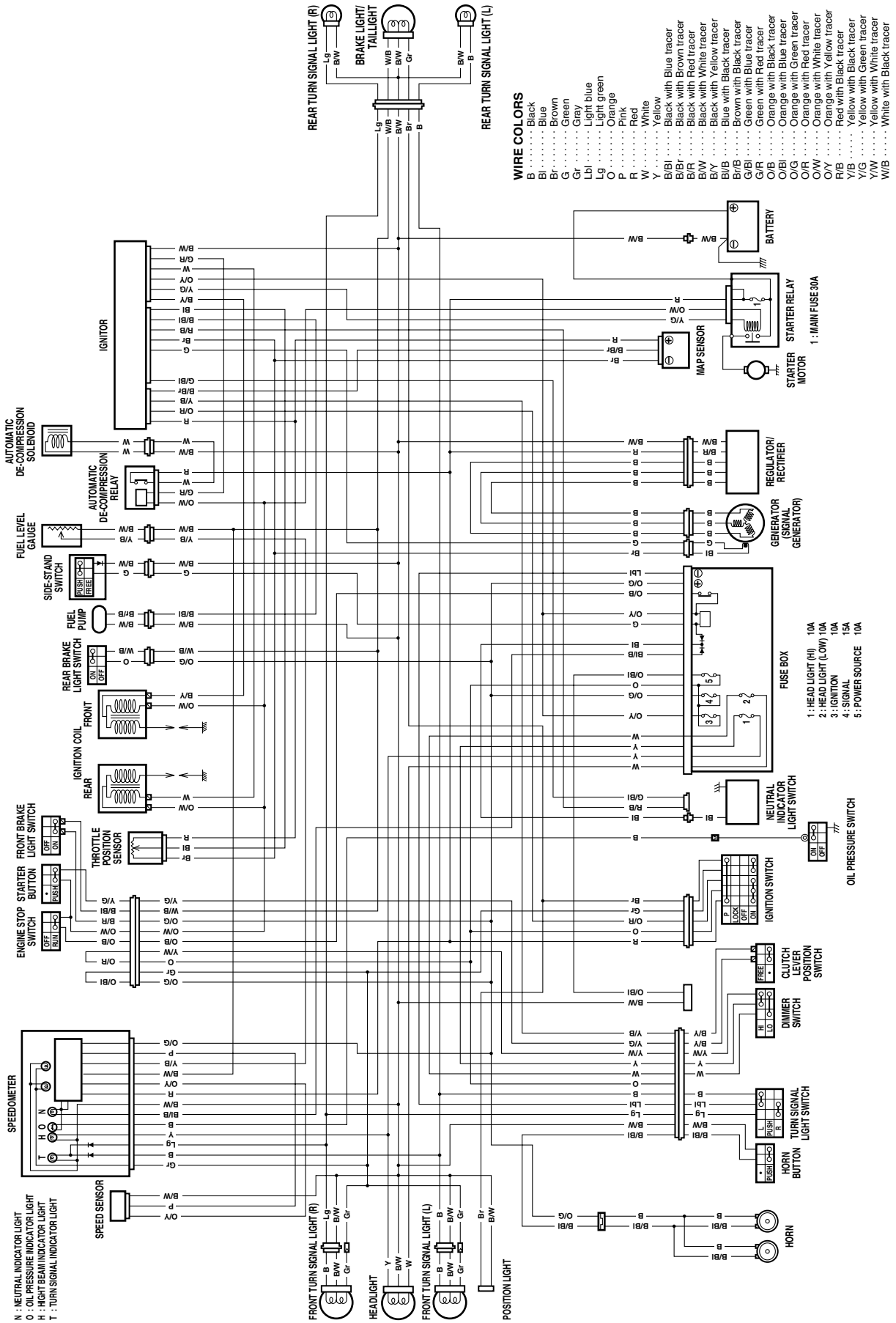

# FRONT BRAKE HOSE ROUTING

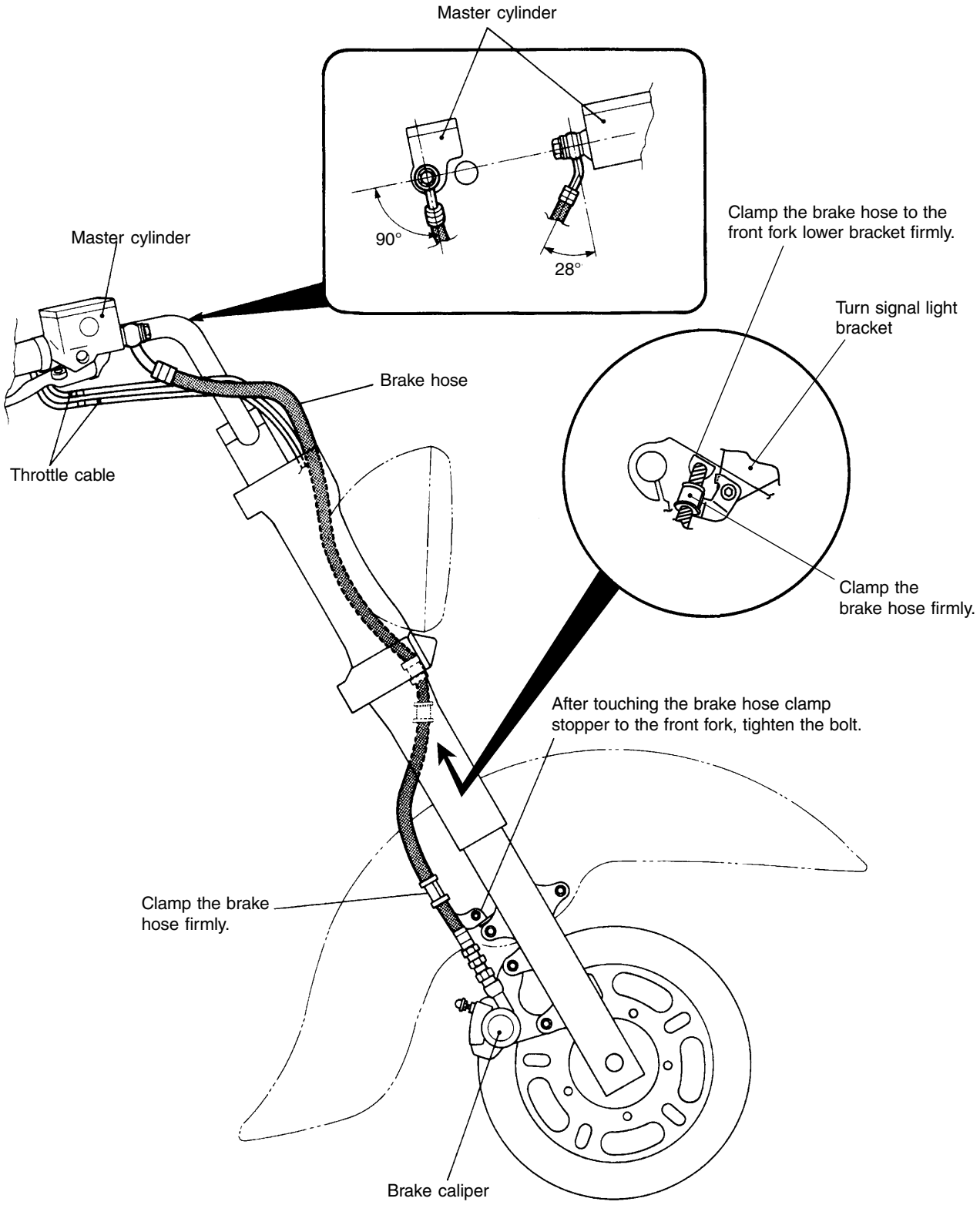

# REAR BRAKE HOSE ROUTING (Y-MODEL)

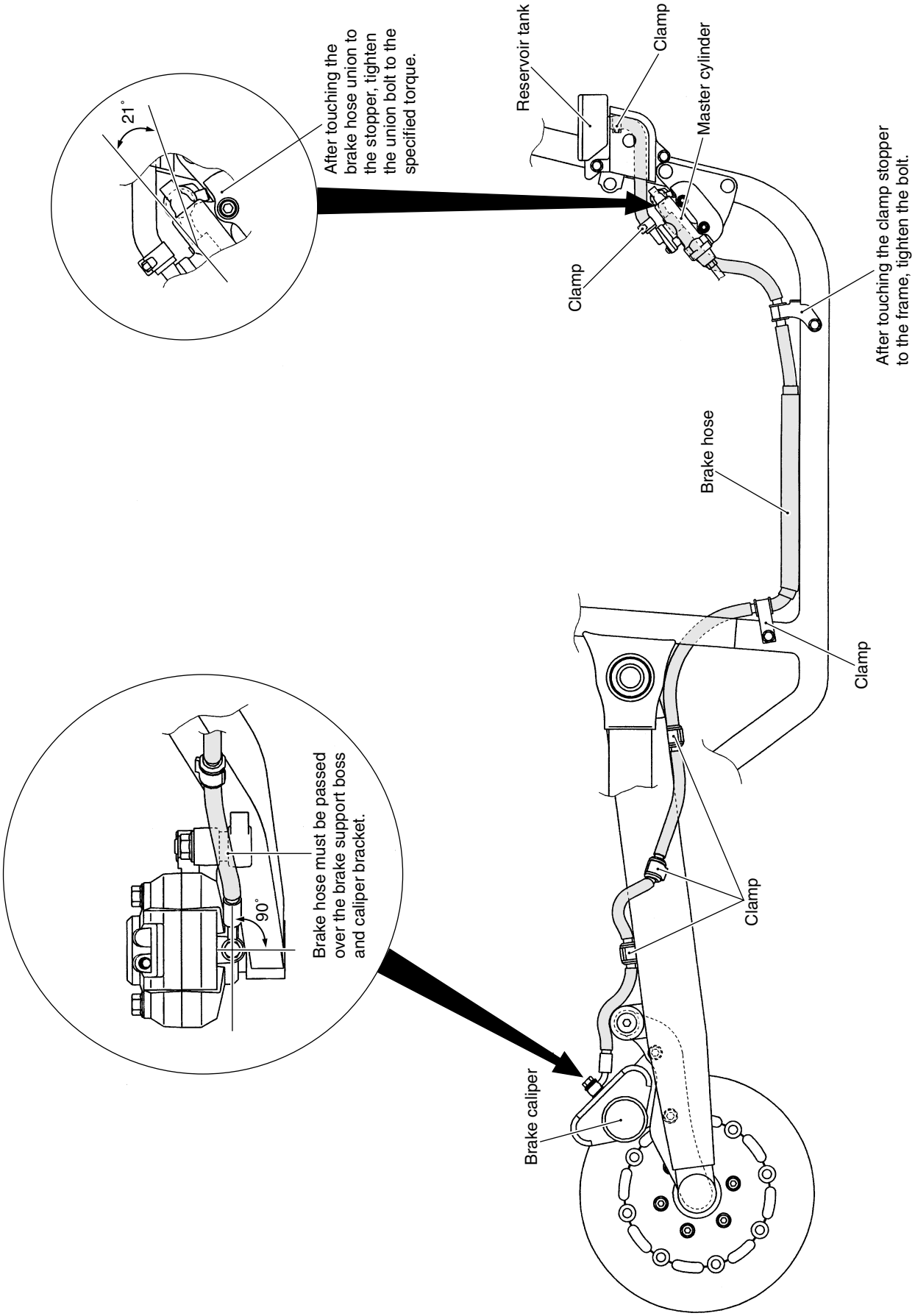

# VL1500K1 ('01-MODEL)

*This chapter describes service data, service specifications and servicing procedures which differ from those of the VL1500Y ( '00-model).*

**CONTENTS**


**SPECIFICATIONS ..... 10- 1**
**SERVICE DATA ..... 10- 2**
**ENGINE INSTALLATION ..... 10-10**
**PAIR (AIR SUPPLY) SYSTEM DIAGRAM ..... 10-11**
**PAIR (AIR SUPPLY) SYSTEM HOSE ROUTING ..... 10-12**
**PAIR (AIR SUPPLY) SYSTEM INSPECTION ..... 10-13**
**WIRE HARNESS ROUTING ..... 10-14**


*NOTE:*
*Any difference between the VL1500Y ('00-model) and VL1500K1 ('01-model) in specifications and service data are clearly indicated with an asterisk (*).*

# SPECIFICATIONS

**DIMENSIONS AND DRY MASS**

| | |
|---|---|
| Overall length | 2 525 mm (99.4 in) |
| Overall width | 965 mm (38.0 in) |
| Overall height | 1 165 mm (45.9 in) |
| Wheelbase | 1 700 mm (66.9 in) |
| Ground clearance | 145 mm ( 5.7 in) |
| Seat height | 700 mm (27.6 in) |
| Dry mass | 296 kg (652 lbs) |

**ENGINE**

| | |
|---|---|
| Type | 4-stroke, Air-cooled, OHC |
| Number of cylinders | 2 |
| Bore | 96 mm (3.780 in) |
| Stroke | 101 mm (3.976 in) |
| Displacement | 1 462 $cm^3$ (89.2 cu. in) |
| Compression ratio | 8.5 : 1 |
| Carburetor | MIKUNI BDSR36, twin |
| Air cleaner | Non-woven fabric element |
| Starter system | Electric |
| Lubrication system | Wet sump |
| Idle speed | 1 000 ± 100 r/min |

**TRANSMISSION**

| | |
|---|---|
| Clutch | Wet multi-plate type |
| Transmission | 5-speed constant mesh |
| Gearshift pattern | 1-down, 4-up |
| Primary reduction ratio | 1.490 (76/51) |
| Final reduction ratio | 2.666 (19/19 × 32/12) |
| Secondary reduction ratio | 0.852 (29/34) |
| Gear ratios, Low | 3.000 (36/12) |
| 2nd | 1.823 (31/17) |
| 3rd | 1.333 (28/21) |
| 4th | 1.041 (25/24) |
| Top | 0.884 (23/26) |
| Drive system | Shaft drive |

**CHASSIS**

| | |
|---|---|
| Front suspension | Telescopic, coil spring, oil damped |
| Rear suspension | Link type, coil spring, oil damped, spring pre-load fully adjustable |
| Front suspension stroke | 140 mm (5.5 in) |
| Rear wheel travel | 118 mm (4.6 in) |
| Caster | 32° |
| Trail | 138 mm (5.43 in) |
| Steering angle | 39° (right & left) |
| Turning radius | 3.1 m (10.2 ft) |
| Front brake | Disk brake |
| Rear brake | Disk brake |
| Front tire size | 150/80-16 71H, tubeless |
| Rear tire size | 180/70-15 M/C 76H, tubeless |

**ELECTRICAL**

| | |
|---|---|
| Ignition type | Electronic ignition (Transistorized) |
| Ignition timing | 2° B.T.D.C. at 1 000 r/min |
| Spark plug | NGK DPR7EA-9 or DENSO X22EPR-U9 |
| Battery | 12V 50.4 kC (14Ah)/10 HR |
| Generator | Three-phase A.C. generator |
| Main fuse | 30A |
| Fuse | 15/15/15/10/10A |
| Headlight | 12V 60/55W (H4) |
| Position/Parking light | 12V 4W ..... Except E-03, 24, 28, 33 |
| Brake light/Taillight | 12V 21/5W |
| Turn signal light | 12V 21/5W ..... E-03, 28, 33 |
| | 12V 21W ..... Others |
| Speedometer light | 12V 0.84W × 2 |
| Fuel level warning light | 12V 1.7W |
| Turn signal indicator light | 12V 1.7W |
| Neutral indicator light | 12V 1.7W |
| High beam indicator light | 12V 1.7W |
| Oil pressure indicator light | LED |

**CAPACITIES**

| | |
|---|---|
| Fuel tank | 15.0 L (4.0/3.3 US/Imp gal) |
| Engine oil, oil change | 3 700 ml (3.9/3.3 US/Imp qt) |
| with filter change | 4 300 ml (4.5/3.8 US/Imp qt) |
| overhaul | 5 000 ml (5.3/4.4 US/Imp qt) |
| Final gear oil | 200 – 220 ml (6.8/7.0 – 7.4/7.7 US/Imp oz) |
| Front fork oil (each leg) | 439 ml (14.8/15.5 US/Imp oz) |

# SERVICE DATA

## VALVE + GUIDE

Unit: mm (in)

| ITEM | STANDARD | | LIMIT |
|---|---|---|---|
| Valve diam. | IN. | 33<br>(1.3) | ——— |
| | EX. | 40<br>(1.6) | ——— |
| Lash-adjuster plunger stroke | 0 – 0.5<br>(0 – 0.02) | | ——— |
| Valve guide to valve stem clearance | IN. | 0.010 – 0.037<br>(0.0004 – 0.0015) | ——— |
| | EX. | 0.040 – 0.070<br>(0.0016 – 0.0028) | ——— |
| Valve stem deflection | IN. & EX. | ——— | 0.35<br>(0.014) |
| Valve guide I.D. | IN. | 5.500 – 5.512<br>(0.2165 – 0.2170) | ——— |
| | EX. | 7.000 – 7.015<br>(0.2756 – 0.2762) | ——— |
| Valve stem O.D. | IN. | 5.475 – 5.490<br>(0.2156 – 0.2161) | ——— |
| | EX. | 6.945 – 6.960<br>(0.2734 – 0.2740) | ——— |
| Valve stem runout | IN. & EX. | ——— | 0.05<br>(0.002) |
| Valve head thickness | IN. & EX. | ——— | 0.5<br>(0.02) |
| Valve stem end length | IN. | ——— | 2.5<br>(0.10) |
| | EX. | ——— | 2.2<br>(0.09) |
| Valve seat width | IN. | 0.9 – 1.1<br>(0.035 – 0.043) | ——— |
| | EX. | 1.0 – 1.2<br>(0.039 – 0.047) | ——— |
| Valve head radial runout | IN. & EX. | ——— | 0.03<br>(0.001) |
| Valve spring free length (INTAKE) | INNER | ——— | 35.0<br>(1.38) |
| | OUTER | ——— | 37.8<br>(1.49) |
| Valve spring free length (EXHAUST) | ——— | | 40.6<br>(1.60) |
| Valve spring tension (INTAKE) | INNER | 5.3 – 6.5 kgf<br>(11.68 – 14.33 lbs)<br>at length 28.0 mm (1.10 in) | ——— |
| | OUTER | 14.0 – 14.2 kgf<br>(30.86 – 31.31 lbs)<br>at length 31.5 mm (1.24 in) | ——— |
| Valve spring tension (EXHAUST) | 20.3 – 23.3 kgf<br>(44.75 – 51.37 lbs)<br>at length 35.0 mm (1.38 in) | | ——— |

## CAMSHAFT + CYLINDER HEAD

Unit: mm (in)

| ITEM | STANDARD | | LIMIT |
|---|---|---|---|
| Cam height | IN. | 35.680 – 35.730<br>(1.4047 – 1.4067) | 35.38<br>(1.393) |
| | EX. | 36.880 – 36.930<br>(1.4521 – 1.4537) | 36.58<br>(1.440) |
| Camshaft journal oil clearance | IN. & EX. | 0.032 – 0.066<br>(0.0013 – 0.0026) | 0.150<br>(0.0060) |
| Camshaft journal holder I.D. | Front head right side,<br>rear head left side | 20.012 – 20.025<br>(0.7879 – 0.7884) | ——— |
| | Front head left side,<br>rear head right side | 25.012 – 25.025<br>(0.9847 – 0.9852) | ——— |
| Camshaft journal O.D. | Front head right side,<br>rear head left side | 19.959 – 19.980<br>(0.7858 – 0.7866) | ——— |
| | Front head left side,<br>rear head right side | 24.959 – 24.980<br>(0.9826 – 0.9835) | ——— |
| Camshaft runout | Front & Rear | ——— | 0.10<br>(0.004) |
| Rocker arm I.D. | IN. | 14.000 – 14.018<br>(0.5511 – 0.5519) | ——— |
| | EX. | 16.000 – 16.018<br>(0.6299 – 0.6303) | ——— |
| Rocker arm shaft O.D. | IN. | 13.966 – 13.984<br>(0.5498 – 0.5506) | ——— |
| | EX. | 15.966 – 15.984<br>(0.6286 – 0.6293) | ——— |
| Cylinder head distortion | ——— | | 0.05<br>(0.002) |
| Cylinder head cover distortion | ——— | | 0.05<br>(0.002) |

## CYLINDER + PISTON + PISTON RING

Unit: mm (in)

| ITEM | STANDARD | | | LIMIT |
|---|---|---|---|---|
| Campression pressure<br>(Automatic de-compression actuated) | 1 000 – 1 400 kPa<br>(10 – 14 kgf/cm$^2$<br>142 – 199 psi) | | | 800 kPa<br>(8 kgf/cm$^2$<br>144 psi) |
| Campression pressure difference | ——— | | | 200 kPa<br>(2 kgf/cm$^2$<br>28 psi) |
| Piston to cylinder clearance | 0.02 – 0.03<br>(0.0008 – 0.0012) | | | 0.120<br>(0.0047) |
| Cylinder bore | 96.000 – 96.015<br>(3.7795 – 3.7801) | | | Nicks or<br>Scratches |
| Piston diam. | 95.975 – 95.990<br>(3.7785 – 3.7791)<br>Measure at 16 mm (0.6 in) from the skirt end. | | | 95.88<br>(37.7748) |
| Cylinder distortion | ——— | | | 0.05<br>(0.002) |
| Piston ring free end gap | 1st | T | Approx. 13.5<br>(0.53) | 10.8<br>(0.43) |
| | 2nd | T | Approx. 14.0<br>(0.55) | 11.2<br>(0.44) |

| ITEM | STANDARD | | LIMIT |
|---|---|---|---|
| Piston ring end gap | 1st | 0.30 – 0.45<br>(0.012 – 0.018) | 0.70<br>(0.028) |
| | 2nd | 0.45 – 0.60<br>(0.018 – 0.024) | 1.00<br>(0.039) |
| Piston ring to groove clearance | 1st | ——— | 0.180<br>(0.007) |
| | 2nd | ——— | 0.150<br>(0.006) |
| Piston ring groove width | 1st | 1.210 – 1.230<br>(0.0476 – 0.0484) | ——— |
| | 2nd | 1.510 – 1.530<br>(0.0594 – 0.0602) | ——— |
| | Oil | 2.810 – 2.830<br>(0.1106 – 0.1114) | ——— |
| Piston ring thickness | 1st | 1.160 – 1.175<br>(0.0457 – 0.0463) | ——— |
| | 2nd | 1.470 – 1.490<br>(0.0579 – 0.0587) | ——— |
| Piston pin bore | 23.002 – 23.008<br>(0.9056 – 0.9058) | | 23.030<br>(0.9067) |
| Piston pin O.D. | 22.992 – 23.000<br>(0.9052 – 0.9055) | | 22.980<br>(0.9047) |

## CONROD + CRANKSHAFT

Unit: mm (in)

| ITEM | STANDARD | LIMIT |
|---|---|---|
| Conrod small end I.D. | 23.015 – 23.023<br>(0.9061 – 0.9064) | 23.040<br>(0.9071) |
| Conrod big end side clearance | 0.10 – 0.200.3<br>(0.004 – 0.008) | (0.012) |
| Conrod big end width | 21.95 – 22.00<br>(0.864 – 0.866) | ——— |
| Crank pin width | 22.10 – 22.15<br>(0.870 – 0.872) | ——— |
| Conrod big end oil clearance | 0.024 – 0.042<br>(0.0009 – 0.0017) | 0.080<br>(0.0031) |
| Crank pin O.D. | 49.982 – 50.000<br>(1.9678 – 1.9685) | ——— |
| Crankshaft journal oil clearance | 0.020 – 0.050<br>(0.0008 – 0.0020) | 0.080<br>(0.0031) |
| Crankshaft journal O.D. | 51.965 – 51.980<br>(2.0459 – 2.0465) | ——— |
| Crankshaft journal I.D. | 52.000 – 52.015<br>(2.0472 – 2.0478) | ——— |
| Crankshaft thrust bearing thickness | 1.925 – 2.175<br>(0.0758 – 0.0856) | ——— |
| Crankshaft thrust clearance | 0.05 – 0.10<br>(0.002 – 0.004) | ——— |
| Crankshaft runout | ——— | 0.05<br>(0.002) |

## OIL PUMP

| ITEM | STANDARD | LIMIT |
|---|---|---|
| Oil pump reduction ratio | 1.154 (76/51 × 31/40) | ——— |
| Oil pressure (at 60°C, 140°F) | Above 350 kPa (3.5 kgf/cm², 50 psi)<br>Below 650 kPa (6.5 kgf/cm², 92 psi)<br>at 3 000 r/min. | ——— |

## CLUTCH

Unit: mm (in)

| ITEM | STANDARD | LIMIT |
|---|---|---|
| Drive plate thickness | 2.90 – 3.10<br>(0.114 – 0.122) | 2.60<br>(0.102) |
| Drive plate claw width | 15.6 – 15.8<br>(0.614 – 0.622) | 14.8<br>(0.583) |
| Driven plate distortion | ——— | 0.10<br>(0.004) |
| Clutch spring free length | * 34.47<br>(1.357) | * 32.7<br>(1.29) |
| Clutch master cylinder bore | 14.000 – 14.043<br>(0.5512 – 0.5529) | ——— |
| Clutch master cylinder piston diam. | 13.957 – 13.984<br>(0.5495 – 0.5506) | ——— |
| Clutch release cylinder bore | 33.600 – 33.662<br>(1.3228 – 1.3253) | ——— |
| Clutch release cylinder piston diam. | 33.550 – 33.575<br>(1.3209 – 1.3218) | ——— |

## TRANSMISSION

Unit: mm (in) Except ratio

| ITEM | | STANDARD | LIMIT |
|---|---|---|---|
| Primary reduction ratio | | 1.490 (76/51) | ——— |
| Secondary reduction ratio | | 0.852 (29/34) | ——— |
| Final reduction ratio | | 2.666 (19/19 × 32/12) | ——— |
| Gear ratios | Low | 3.000 (36/12) | ——— |
| | 2nd | 1.823 (31/17) | ——— |
| | 3rd | 1.333 (28/21) | ——— |
| | 4th | 1.041 (25/24) | ——— |
| | Top | 0.884 (23/26) | ——— |
| Shift fork to groove clearance | | 0.1 – 0.3<br>(0.004 – 0.012) | 0.5<br>(0.020) |
| Shift fork groove width | | 5.50 – 5.60<br>(0.217 – 0.220) | ——— |
| Shift fork thickness | | 5.30 – 5.40<br>(0.209 – 0.213) | ——— |
| Damper spring free length | | ——— | 73.6<br>(2.90) |
| Gearshift lever height | | 82<br>(3.23) | ——— |

## SHAFT DRIVE

Unit: mm (in)

| ITEM | STANDARD | LIMIT |
|---|---|---|
| Secondary bevel gear backlash | 0.03 – 0.15<br>(0.001 – 0.006) | ——— |
| Final bevel gear backlash | 0.03 – 0.64<br>(0.001 – 0.025) | ——— |

## CARBURETOR

| ITEM | STANDARD | | |
|---|---|---|---|
| | E-28 | E-24 | * E-02, 19 |
| Carburetor type | BDSR36 | ← | ← |
| Bore size | 36.5 mm | ← | ← |
| I.D. No. | 10F1 | 10F2 | * 10F9 |
| Idle r/min. | 1 000 ± 100 r/min. | ← | ← |
| Float height | 7.0 ± 0.5 mm<br>(0.28 ± 0.02 in) | ← | ← |
| Main jet (M.J.) | F: # 112.5<br>R: # 110 | F: #112.5<br>R: #110 | ← |
| Jet needle (J.N.) | F: 5D95-56<br>R: 5E9-56 | F: 5D94-56-3<br>R: 5E8-56-3 | * F: 5D124-3<br>R: 5E19-3 |
| Needle jet (N.J.) | P-0M | P-0 | * P-0M |
| Throttle valve (Th.V.) | #90 | ← | ← |
| Pilot jet (P.J.) | #32.5 | #32.5 | ← |
| Pilot screw (P.S.) | PRE-SET<br>(F: 2 1/4 turns back<br>R: 2 1/8 turns back) | PRE-SET<br>(F: 2 turns back<br>R: 2 turns back) | * PRE-SET<br>(F: 1 3/4 turns back<br>R: 1 3/8 turns back) |
| Throttle cable play | 2.0 – 4.0 mm<br>(0.08 – 0.16 in) | ← | ← |

## CARBURETOR

| ITEM | STANDARD | | |
|---|---|---|---|
| | E-03 | E-33 | P-37 |
| Carburetor type | BDSR36 | ← | ← |
| Bore size | 36.5 mm | ← | ← |
| I.D. No. | 10F1 | 10F7 | 10F6 |
| Idle r/min. | 1 000 ± 100 r/min. | ← | ← |
| Float height | 7.0 ± 0.5 mm<br>(0.28 ± 0.02 in) | ← | ← |
| Main jet (M.J.) | F: #112.5<br>R: #110 | ← | F: #112.5<br>R: #110 |
| Jet needle (J.N.) | F: 5D95-56<br>R: 5E9-56 | ← | F: 5D94-56-3<br>R: 5E8-56-3 |
| Needle jet (N.J.) | P-0M | ← | P-0 |
| Throttle valve (Th.V.) | # 90 | ← | ← |
| Pilot jet (P.J.) | #32.5 | ← | #32.5 |
| Pilot screw (P.S.) | PRE-SET | ← | PRE-SET<br>(F: 2 turns back<br>R: 2 turns back) |
| Throttle cable play | 2.0 – 4.0 mm<br>(0.08 – 0.16 in) | ← | ← |

## ELECTRICAL

Unit: mm (in)

| ITEM | | | SPECIFICATION | NOTE |
|---|---|---|---|---|
| Ignition timing | | | 2° B.T.D.C. at 1 000 r/min. | |
| Firing order | | | R · F | |
| Spark plug | | Type | NGK: DPR7EA-9<br>DENSO: X22EPR-U9 | |
| | | Gap | 0.8 – 0.9<br>(0.031 – 0.035) | |
| Spark performance | | | Over 8 (0.3) at 1 atm. | |
| Signal coil resistance | | | 178 – 242 Ω | Bl – G |
| Signal coil peak voltage | | | More than 2.4 V | |
| Ignition coil resistance | | Primary | 1 – 7 Ω | ⊕ tap – ⊖ tap |
| | | Secondary | 18 – 28 kΩ | Plug cap – ⊕ tap |
| Ignition coil primary peak voltage | | Front | More than 190 V | B/Y – Ground |
| | | Rear | More than 200 V | W – Ground |
| Generator Max. output | | | Approx. 340 W at 5 000 r/min. | |
| Generator no-load voltage (when engine is cold) | | | More than 80 V (AC) at 5 000 r/min. | |
| Regulated voltage | | | 13.5 – 15.0 V at 5 000 r/min. | |
| Starter relay resistance | | | 3 – 6 Ω | |
| De-comp. solenoid resistance | | | 0.1 – 1.0 Ω | |
| Fuel pump resistance | | | 1 – 2.5 Ω | |
| Fuel pump discharge amount | | | More than 600 ml (1.27 US qt)/minute | |
| Battery | Type designation | | FTH16-BS-1 | |
| | Voltage | | 12 V | |
| | Capacity | | 50.4 kC (14 Ah)/10HR | |
| | Standard electrolyte S.G. | | 1.320 at 20°C (68°F) | |
| Fuse size | Headlight | HI | 15 A | |
| | | LO | 15 A | |
| | Signal | | 15 A | |
| | Ignition | | 10 A | |
| | Main | | 30 A | |
| | Power source | | 10 A | |

## WATTAGE

Unit: W

| ITEM | | SPECIFICATION | | |
|---|---|---|---|---|
| | | E-03, 28, 33 | E-24 | Others |
| Headlight | HI | 60 | ← | ← |
| | LO | 55 | ← | ← |
| Position light | | | | 4 |
| Brake light / Taillight | | 21/5 | ← | ← |
| Turn signal light | | 21/5 | 21 | ← |
| Running light | | 5 | | |
| Speedometer light | | 0.84 | ← | ← |
| Turn signal indicator light | | 1.7 | ← | ← |
| High beam indicator light | | 1.7 | ← | ← |
| Neutral indicator light | | 1.7 | ← | ← |
| Fuel level warning light | | 1.7 | ← | ← |

## BRAKE + WHEEL

Unit: mm (in)

| ITEM | STANDARD | | LIMIT |
|---|---|---|---|
| Rear brake pedal height | 98<br>(3.86) | | ——— |
| Brake disc thickness | Front | 5.8 – 6.2<br>(0.228 – 0.244) | 5.5<br>(0.22) |
| | Rear | 6.6 – 7.0<br>(0.260 – 0.276) | 6.3<br>(0.25) |
| Brake disc runout | ——— | | 0.30<br>(0.012) |
| Master cylinder bore | Front | 12.700 – 12.743<br>(0.5000 – 0.5017) | ——— |
| | Rear | 12.700 – 12.743<br>(0.5000 – 0.5017) | ——— |
| Master cylinder piston diam. | Front | 12.657 – 12.684<br>(0.4983 – 0.4994) | ——— |
| | Rear | 12.657 – 12.684<br>(0.4983 – 0.4994) | ——— |
| Brake caliper cylinder bore | Front | 45.000 – 45.076<br>(1.7717 – 1.7746) | ——— |
| | Rear | 42.850 – 42.926<br>(1.6870 – 1.6900) | ——— |
| Brake caliper piston diam. | Front | 44.930 – 44.980<br>(1.7689 – 1.7709) | ——— |
| | Rear | 42.770 – 42.820<br>(1.6839 – 1.6858) | ——— |
| Wheel rim runout | Axial | ——— | 2.0<br>(0.08) |
| | Radial | ——— | 2.0<br>(0.08) |
| Wheel axle runout | Front | ——— | 0.25<br>(0.010) |
| | Rear | ——— | 0.25<br>(0.010) |
| Wheel rim size | Front | 16 × MT3.50 | ——— |
| | Rear | 15M/C × MT5.00 | ——— |
| Tire size | Front | 150/80-16 71H | ——— |
| | Rear | 180/70-15M/C 76H | ——— |
| Tire tread depth | Front | ——— | 1.6<br>(0.06) |
| | Rear | ——— | 2.0<br>(0.08) |

## SUSPENSION

Unit: mm (in)

| ITEM | STANDARD | LIMIT | NOTE |
|---|---|---|---|
| Front fork stroke | 140<br>(5.5) | _____ | |
| Front fork spring free length | 585<br>(23.03) | 573<br>(22.56) | |
| Front fork oil level | 169.0<br>(6.65) | _____ | |
| Rear shock absorber spring set length | 222.0<br>(8.74) | _____ | |
| Rear wheel travel | 118<br>(4.6) | _____ | |

## TIRE PRESSURE

| COLD INFLATION TIRE PRESSURE | SOLO RIDING | | | DUAL RIDING | | |
|---|---|---|---|---|---|---|
| | kPa | kgf/cm$^2$ | psi | kPa | kgf/cm$^2$ | psi |
| FRONT | 200 | 2.00 | 29 | 200 | 2.00 | 29 |
| REAR | 250 | 2.50 | 36 | 250 | 2.50 | 36 |

## FUEL + OIL

| ITEM | STANDARD | | LIMIT |
|---|---|---|---|
| Fuel type | Use only unleaded gasoline of at least 87 pump octane ($\frac{R+M}{2}$) or 91 octane or higher rated by the research method. Gasoline containing MTBE (Methyl Tertiary Butyl Ether), less than 10% ethanol, or less than 5% methanol with appropriate cosolvents and corrosion inhibitor is permissible. | | E-03, 28, 33 |
| | Gasoline used should be graded 91 octane or higher. An unleaded gasoline is recommended. | | The others |
| Fuel tank | 15.0 L<br>(4.0/3.3 US/Imp gal) | | |
| Engine oil type | SAE 10W/40, API SF or SG | | |
| Engine oil capacity | Change | 3 700 ml<br>(3.9/3.3 US/Imp qt) | |
| | Filter change | 4 300 ml<br>(4.5/3.8 US/Imp qt) | |
| | Overhaul | 5 000 ml<br>(5.3/4.4 US/Imp qt) | |
| Fuel fork oil type | SUZUKI FORK OIL SS-08 (#10)<br>or equivalent fork oil | | |
| Fuel fork oil capacity (each leg) | 439 ml<br>(14.8/15.5 US/Imp oz) | | |
| Bevel gear oil type | Hypoid Gear oil #90 API GL-5 | | |
| Bevel gear oil capacity | Final | 200 – 220 ml<br>(6.8/7.0 – 7.4/7.7 US/Imp oz) | |
| Brake fluid type | DOT 4 | | |

# ENGINE INSTALLATION

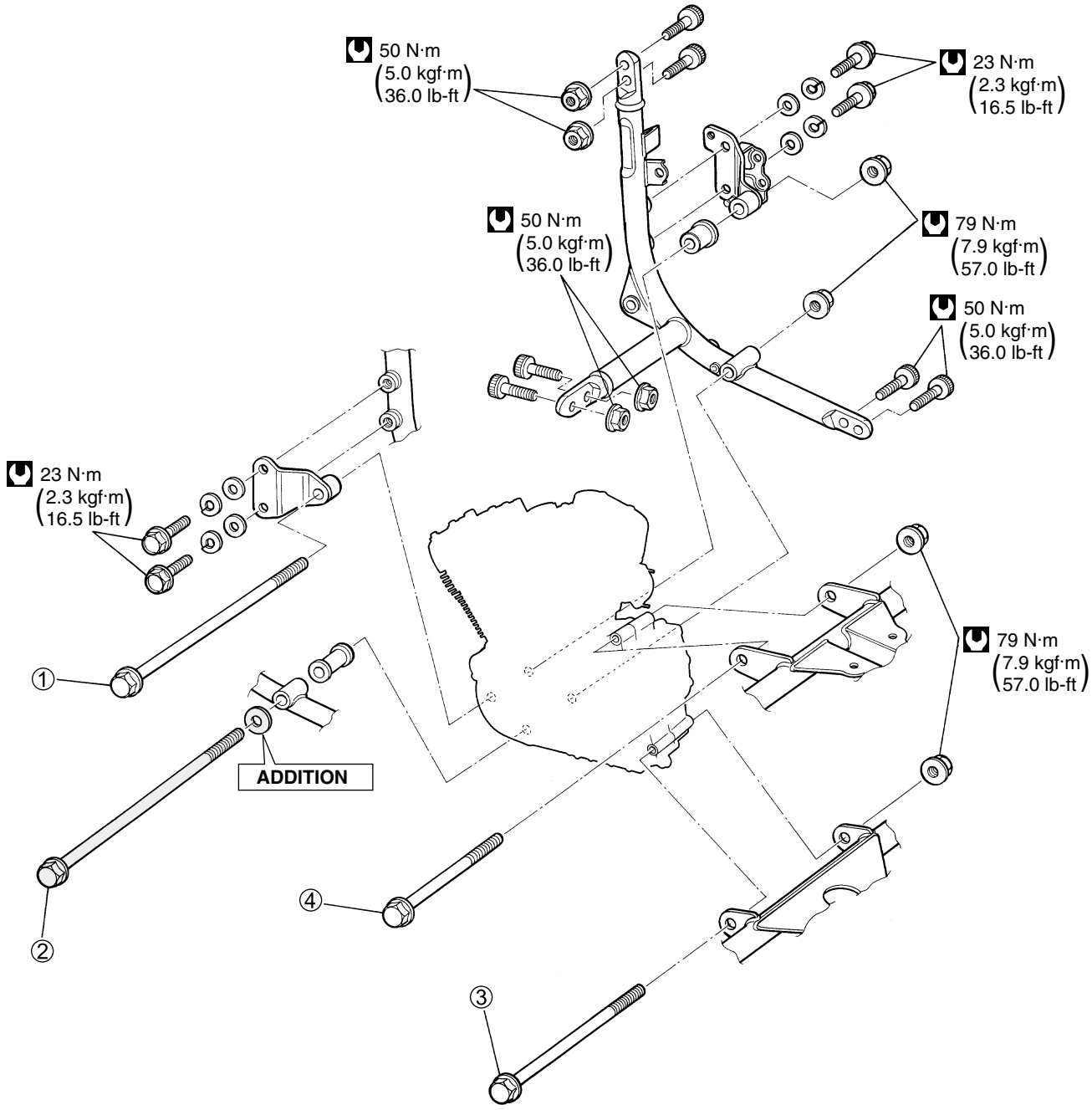


| ITEM | | mm | in |
|---|---|---|---|
| Bolt | ① | 205 | 8.07 |
| | ② | *265 | *10.43 |
| | ③ | 160 | 6.30 |
| | ④ | 140 | 5.51 |

The bolt ② is changed and the washer is added.

# PAIR (AIR SUPPLY) SYSTEM DIAGRAM (EXCEPT P-37)

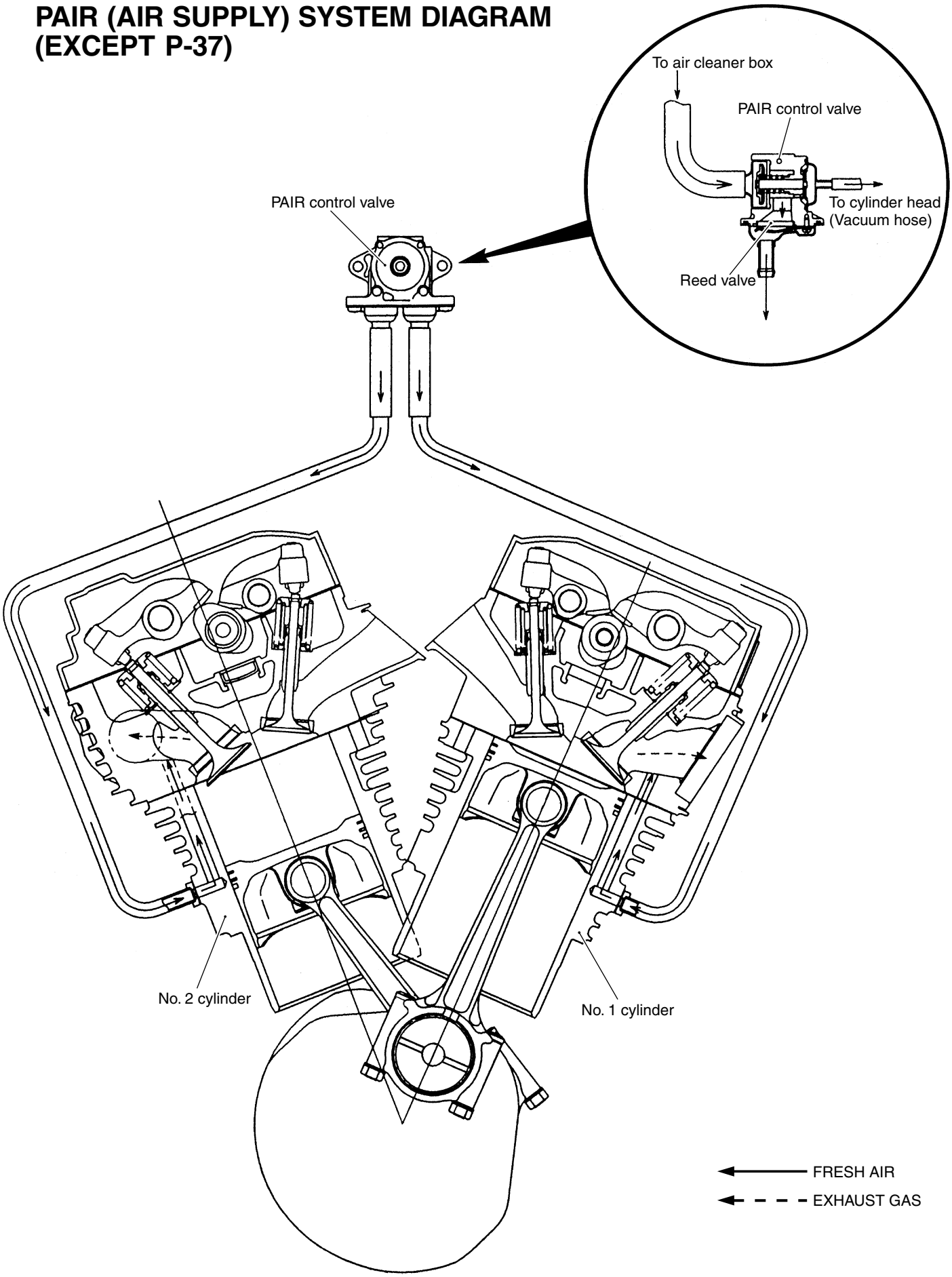

# PAIR (AIR SUPPLY) SYSTEM HOSE ROUTING (EXCEPT P-37)

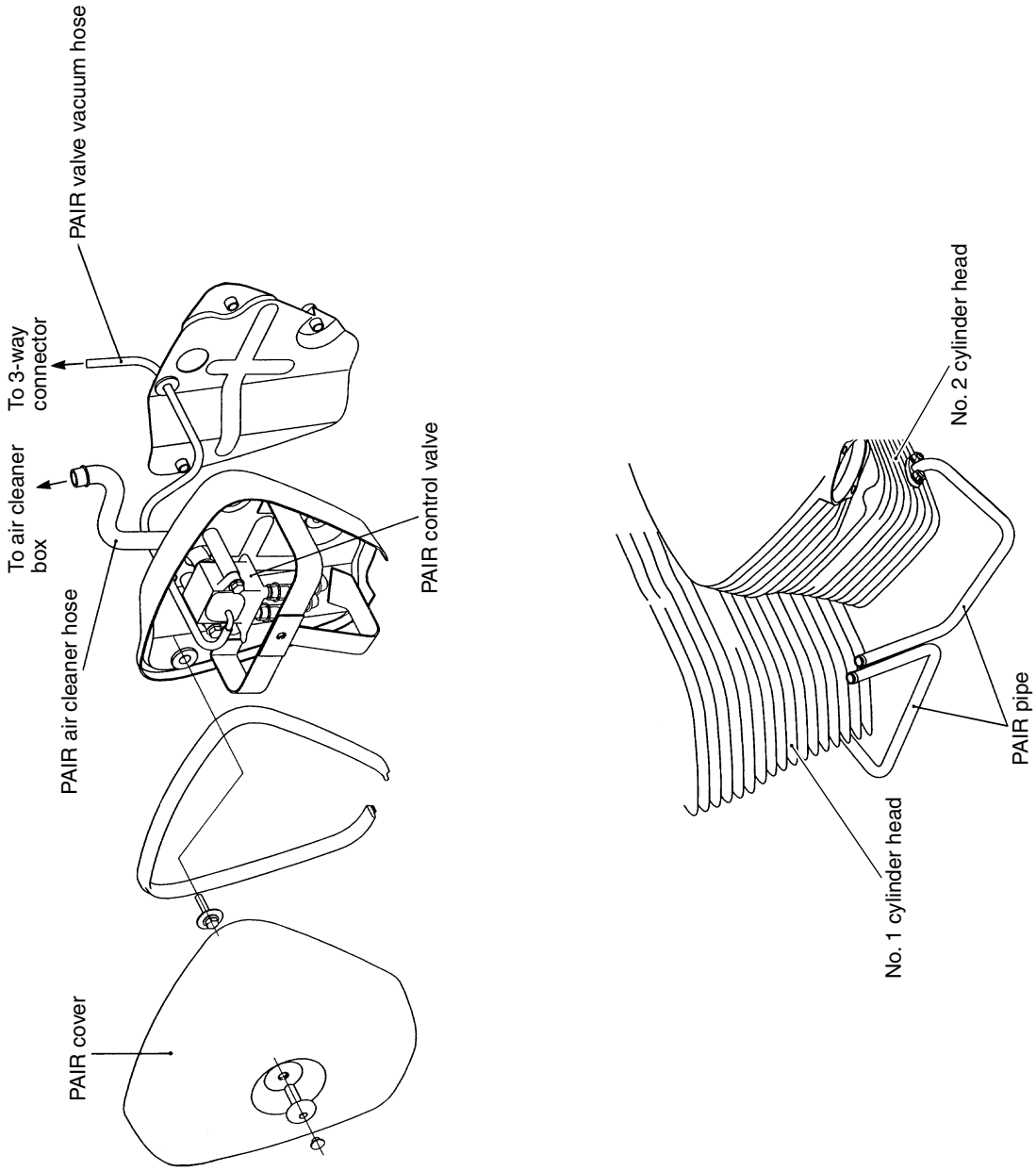

# PAIR (AIR SUPPLY) SYSTEM INSPECTION (EXCEPT P-37)

- Remove the PAIR cover. (☞3-3)

## HOSES AND PIPES

Inspect the hoses and pipes for wear or damage.
Inspact that the hoses and pipes are securely connected.

## PAIR CONTROL VALVE

Inspect the PAIR control valve for damage of the body.

## REED VALVE OF PAIR CONTROL VALVE

- Remove the PAIR control valve.
- Remove the reed valves.

Inspect the reed valve.
If the carbon deposit is found in the reed valve, replace the PAIR control valve with a new one.

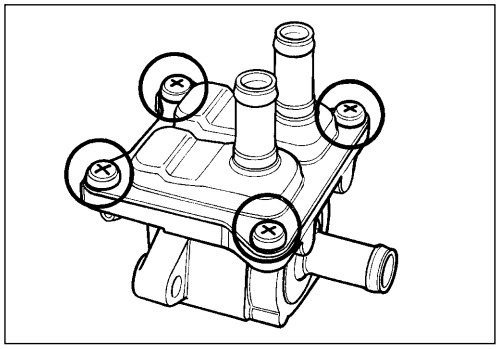

## PAIR CONTROL VALVE

- Remove the PAIR control valve.

Blow the air inlet port of the control valve as shown in the illustration. If air does not flow out, replace the control valve with a new one.

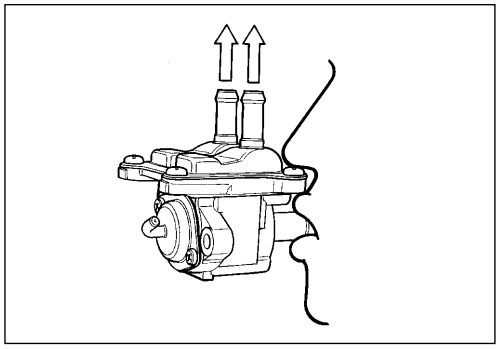

Connect the vacuum pump to the vacuum port of the control valve as shown in the illustration. Apply negative pressure slowly to the control valve and blow the above manner. If air does not become flow out within the specification, the control valve is normal condition.
If the control valve does not function within the specification, replace the control valve with a new one.

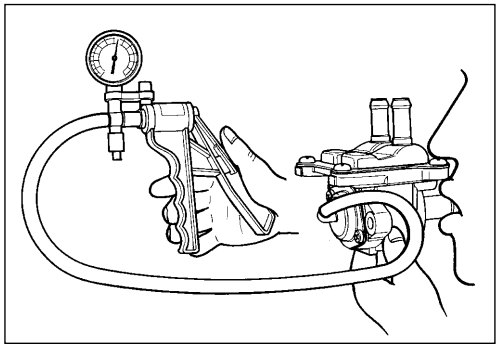

**Negative pressure range: 30.7 – 40 kPa (230 – 300 mmHg)**

TOOL **09917-47010: Vacuum pump gauge**

**⚠ CAUTION**

**Use a hand operated vacuum pump to prevent the control valve damage.**

# WIRE HARNESS ROUTING

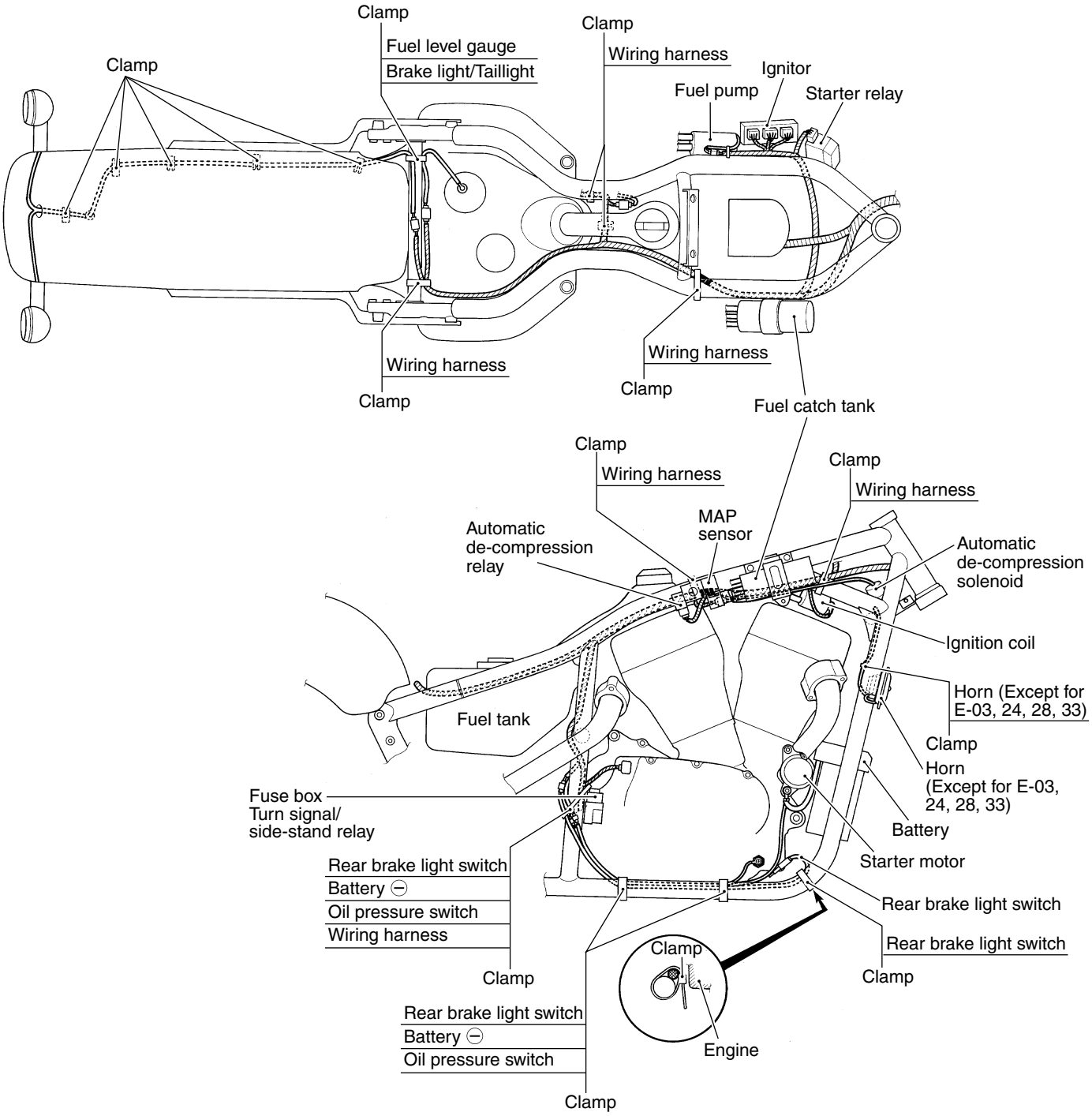

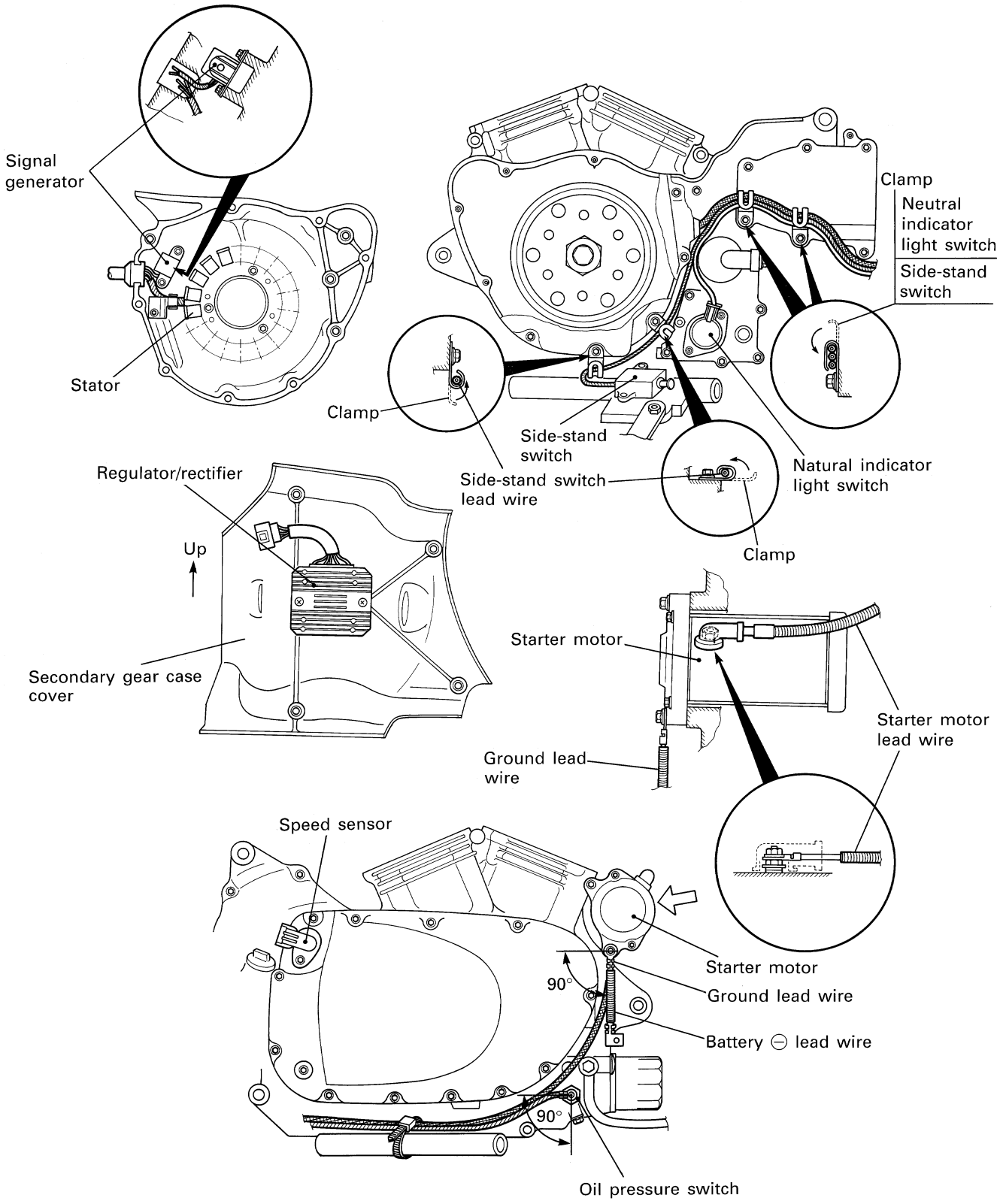
Signal generator
Stator
Clamp
Neutral indicator light switch
Side-stand switch
Clamp
Side-stand switch
Side-stand switch lead wire
Natural indicator light switch
Clamp
Regulator/rectifier
Up
Secondary gear case cover
Starter motor
Starter motor lead wire
Ground lead wire
Speed sensor
Starter motor
Ground lead wire
Battery ⊖ lead wire
90°
90°
Oil pressure switch

# VL1500K2 ('02-MODEL)

*This manual describes service data, service specifications and servicing procedures which differ from those of the VL1500K1 ('01-MODEL).*

**CONTENTS**


**SPECIFICATIONS ..... 11-1**
**FRONT BRAKE ..... 11-3**
- **CONSTRUCTION ..... 11-3**
- **BRAKE PAD REPLACEMENT ..... 11-4**
- **BRAKE FLUID REPLACEMENT ..... 11-4**
- **BRAKE CALIPER REMOVAL AND DISASSEMBLY ..... 11-5**
- **BRAKE CALIPER INSPECTION ..... 11-6**
- **BRAKE DISC INSPECTION ..... 11-6**
- **BRAKE CALIPER REASSEMBLY AND REMOUNTING ..... 11-7**

**REAR BRAKE ..... 11-9**
- **CONSTRUCTION ..... 11-9**
- **BRAKE PAD REPLACEMENT ..... 11-10**
- **BRAKE FLUID REPLACEMENT ..... 11-10**
- **BRAKE CALIPER REMOVAL AND DISASSEMBLY ..... 11-11**
- **CALIPER INSPECTION ..... 11-12**
- **CALIPER REASSEMBLY AND REMOUNTING ..... 11-12**

**WIRE HARNESS ROUTING ..... 11-14**
**FRONT BRAKE HOSE ROUTING ..... 11-16**
**REAR BRAKE HOSE ROUTING ..... 11-18**
**SERVICE DATA ..... 11-19**


*NOTE:*
*Any differences between the VL1500K1 ('01-model) and VL1500K2 ('02-model) in specifications and service data are indicated with an asterisk mark (*).*

# SPECIFICATIONS

## DIMENSIONS AND DRY MASS

| | |
|---|---|
| Overall length | 2 525 mm (99.4 in) |
| Overall width | 965 mm (38.0 in) |
| Overall height | 1 165 mm (45.9 in) |
| Wheelbase | 1 700 mm (66.9 in) |
| Ground clearance | 145 mm ( 5.7 in) |
| Seat height | 700 mm (27.6 in) |
| Dry mass * | 299 kg (659 lbs) |

## ENGINE

| | |
|---|---|
| Type | 4-stroke, Air-cooled, OHC |
| Number of cylinders | 2 |
| Bore | 96 mm (3.780 in) |
| Stroke | 101 mm (3.976 in) |
| Displacement | 1 462 $cm^3$ (89.2 cu. in) |
| Compression ratio | 8.5 : 1 |
| Carburetor | MIKUNI BDSR36, twin |
| Air cleaner | Non-woven fabric element |
| Starter system | Electric |
| Lubrication system | Wet sump |
| Idle speed | 1 000 ± 100 r/min |

## DRIVE TRAIN

| | |
|---|---|
| Clutch | Wet multi-plate type |
| Transmission | 5-speed constant mesh |
| Gearshift pattern | 1-down, 4-up |
| Primary reduction ratio | 1.490 (76/51) |
| Final reduction ratio | 2.666 (19/19 × 32/12) |
| Secondary reduction ratio | 0.852 (29/34) |
| Gear ratios, Low | 3.000 (36/12) |
| 2nd | 1.823 (31/17) |
| 3rd | 1.333 (28/21) |
| 4th | 1.041 (25/24) |
| Top | 0.884 (23/26) |
| Drive system | Shaft drive |

## CHASSIS

| | |
|---|---|
| Front suspension | Telescopic, coil spring, oil damped |
| Rear suspension | Link type, coil spring, oil damped |
| Front suspension stroke | 140 mm (5.5 in) |
| Rear wheel travel | 118 mm (4.6 in) |
| Caster | 32° |
| Trail | 138 mm (5.43 in) |
| Steering angle | 39° (right & left) |
| Turning radius | 3.1 m (10.2 ft) |
| Front brake | * Disk brake, twin |
| Rear brake | Disk brake |
| Front tire size | 150/80-16 71H, tubeless |
| Rear tire size | 180/70-15M/C 76H, tubeless |

## ELECTRICAL

| | |
|---|---|
| Ignition type | Electronic ignition (Transistorized) |
| Ignition timing | 2° B.T.D.C. at 1 000 r/min |
| Spark plug | NGK DPR7EA-9 or DENSO X22EPR-U9 |
| Battery | 12V 50.4 kC (14Ah)/10 HR |
| Generator | Three-phase A.C. generator |
| Main fuse | 30A |
| Fuse | 15/15/15/10/10A |
| Headlight | 12V 60/55W (H4) |
| Position/Parking light | 12V 4W ..... Except E-03, 24, 28, 33 |
| Brake light/Taillight | 12V 21/5W |
| Turn signal light | 12V 21/5W ..... E-03, 28, 33 |
| | 12V 21W ..... Others |
| Speedometer light | 12V 0.84W × 2 |
| Fuel level warning light | 12V 1.7W |
| Turn signal indicator light | 12V 1.7W |
| Neutral indicator light | 12V 1.7W |
| High beam indicator light | 12V 1.7W |
| Oil pressure indicator light | LED |

## CAPACITIES

| | |
|---|---|
| Fuel tank | 15.0 L (4.0/3.3 US/Imp gal) |
| Engine oil, oil change | 3 700 ml (3.9/3.3 US/Imp qt) |
| with filter change | 4 300 ml (4.5/3.8 US/Imp qt) |
| overhaul | 5 000 ml (5.3/4.4 US/Imp qt) |
| Final gear oil | 200 – 220 ml (6.8/7.0 – 7.4/7.7 US/Imp oz) |
| Front fork oil (each leg) | 439 ml (14.8/15.5 US/Imp oz) |

# FRONT BRAKE

## CONSTRUCTION

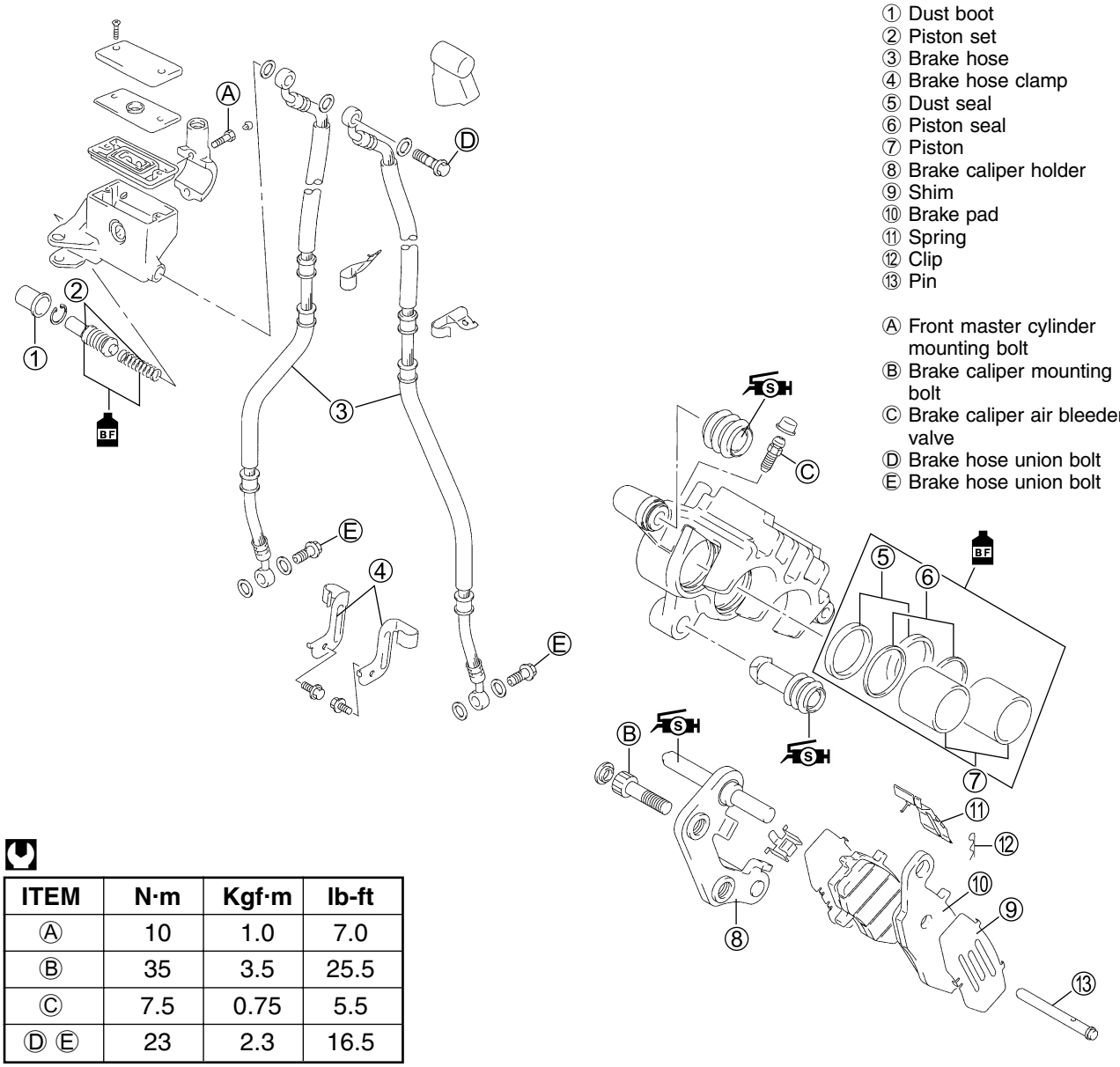


| ITEM | N·m | Kgf·m | lb-ft |
|---|---|---|---|
| Ⓐ | 10 | 1.0 | 7.0 |
| Ⓑ | 35 | 3.5 | 25.5 |
| Ⓒ | 7.5 | 0.75 | 5.5 |
| Ⓓ Ⓔ | 23 | 2.3 | 16.5 |

**⚠ WARNING**

- **This brake system is filled with an ethylene glycol-based DOT 4 brake fluid. Do not use mix different types of fluid such as silicone-based or petroleum-based.**
- **Do not use any brake fluid taken from old, used or unsealed containers. Never reuse brake fluid left over from the last servicing or stored for long periods.**
- **When storing the brake fluid, seal the container completely and keep away from children.**
- **When replenishing brake fluid, take care not to get dust into fluid.**
- **When washing brake components, use fresh brake fluid. Never use cleaning solvent.**
- **A contaminated brake disc or brake pad reduces braking performance. Discard contaminated pads and clean the disc with high quality brake cleaner or neutral detergent.**

**CAUTION**

**Handle brake fluid with care: the fluid reacts chemically with paint, plastics, rubber materials etc.**

## BRAKE PAD REPLACEMENT

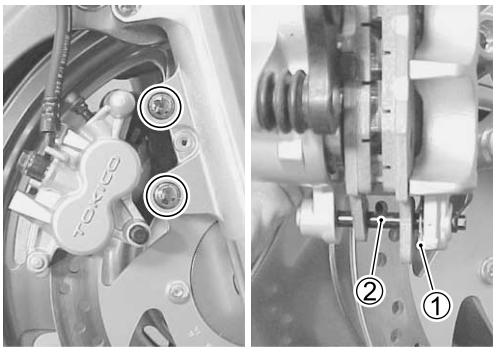


- Remove the bolt caps and brake caliper mounting bolts.
- Remove the brake pads and shims by removing the clip ① and pad mounting pin ②.

**CAUTION**

> *** Do not operate the brake lever while dismounting the pads.**
> *** Replace the brake pads as a set, otherwise braking performance will be adversely affected.**

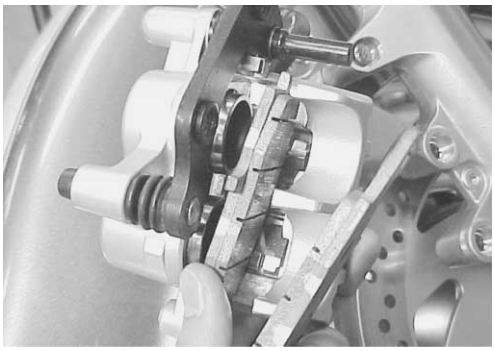

- Install the new brake pads together with the shims.

**Pad mounting pin: 16 N·m (1.6 kgf·m, 11.6 lb-ft)**

*NOTE:*
*After replacing the brake pads, pump the brake lever few times to check for proper brake operation and then check the brake fluid level.*

## BRAKE FLUID REPLACEMENT

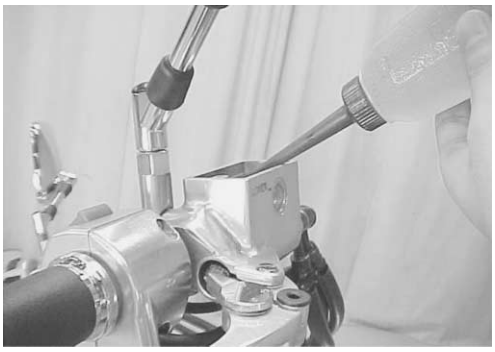

- Place the motorcycle on a level surface and keep the handlebars straight.
- Remove the brake fluid reservoir cap and diaphragm.
- Suck up the old brake fluid as much as possible.
- Fill the reservoir with new brake fluid.

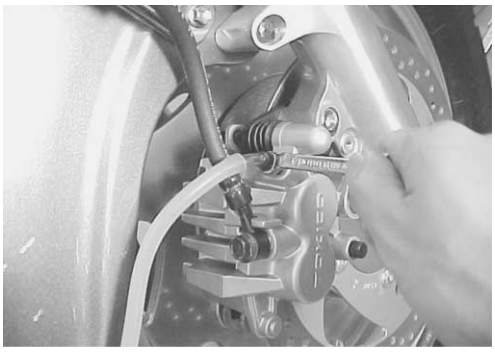

- Connect a clear hose to the caliper air bleeder valve and insert the other end of hose into a receptacle.
- Loosen the air bleeder valve and pump the brake lever until old brake fluid flows out of the bleeder system.
- Close the caliper air bleeder valve and disconnect a clear hose. Fill the reservoir with new fluid to the upper mark of the reservoir.

**Specification and Classification: DOT 4**

**CAUTION**

> **Bleed air from the brake system.**

**Air bleeder valve: 7.5 N·m (0.75 kgf·m, 5.5 lb-ft)**

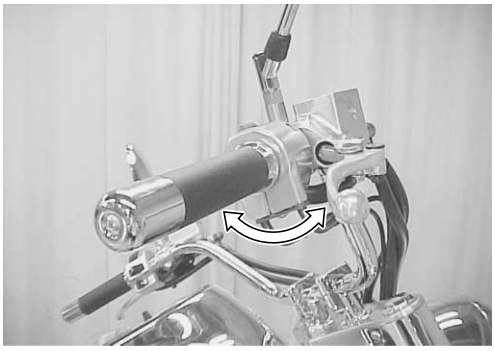

## BRAKE CALIPER REMOVAL AND DISASSEMBLY

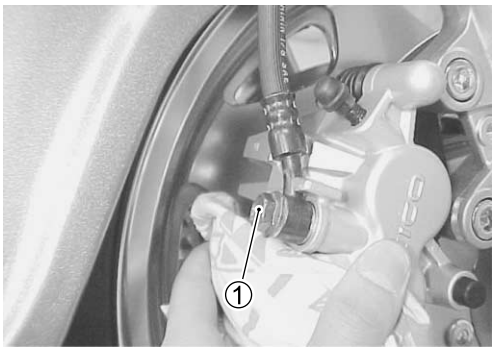


- Remove the brake hose by removing the union bolt ① and catch the brake fluid in a suitable receptacle.

*NOTE:*
*Place a rag underneath the union bolt on the brake caliper to catch any spilt brake fluid.*

- Remove the brake caliper by removing the caliper mounting bolts.

**CAUTION**

**Never reuse the brake fluid left over from previous servicing and stored for long periods of time.**

**⚠ WARNING**

**Brake fluid, if it leaks, will interfere with safe running and discolor painted surfaces. Check the brake hose and hose joints for cracks and fluid leakage.**

- Remove the brake pads. (☞ 11-5)
- Remove the spring ②.

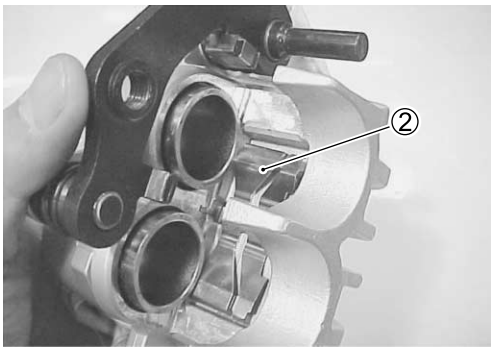


- Place a rag over the pistons to prevent it from popping out and then force out the pistons using compressed air.

**CAUTION**

**Do not use high pressure air to prevent piston damage.**

- Remove the dust seals and piston seals.

**CAUTION**

**Do not reuse the dust seals and piston seals to prevent fluid leakage.**

• Remove the brake caliper holder ①.

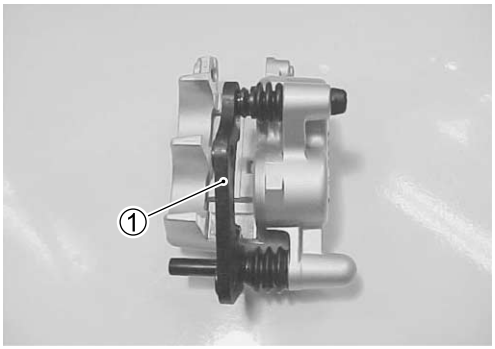


## BRAKE CALIPER INSPECTION

### BRAKE CALIPER

Inspect each brake caliper cylinder wall for nicks, scratches or other damage

### BRAKE CALIPER PISTONS

Inspect the brake caliper piston surface for any scratches or other damage.

### RUBBER PARTS

The removed rubber barts ① should be replaced with new ones.

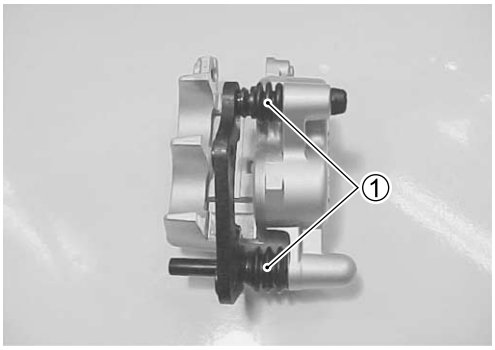


## BRAKE DISC INSPECTION

Visually check the brake disc for damage or cracks.
Measure the thickness with a micrometer.
Replace the disc if the thickness is less than the service limit or if damage is found.

**DATA Brake disc thickness**
**(Front): Service Limit: 4.5 mm (0.18 in)**
**(Rear) : Service Limit: 6.3 mm (0.25 in)**

**TOOL 09900-20205: Micrometer (0 – 25 mm)**

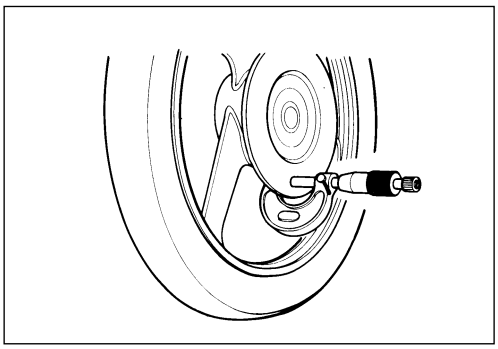

Measure the runout with a dial gauge.
Replace the disc if the runout exceeds the service limit.

**DATA Brake disc runout: Service Limit: 0.30 mm (0.012 in)**

**TOOL 09900-20606: Dial gauge (1/100 mm)**
**09900-20701: Magnetic stand**

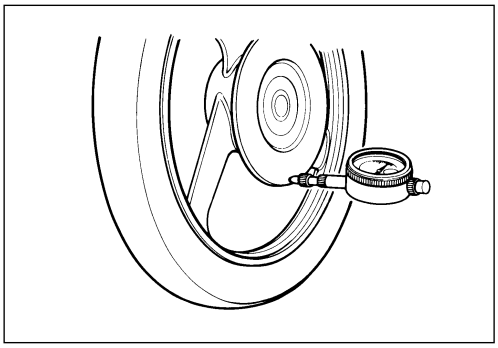

## BRAKE CALIPER REASSEMBLY AND REMOUNTING

Reassemble and remount the brake caliper in the reverse order of removal and disassembly. Pay attention to the following points:

- Wash the caliper bores and pistons with the specified brake fluid. Thoroghly wash the dust seal grooves and piston seal grooves.

**Specification and Classification: DOT 4**

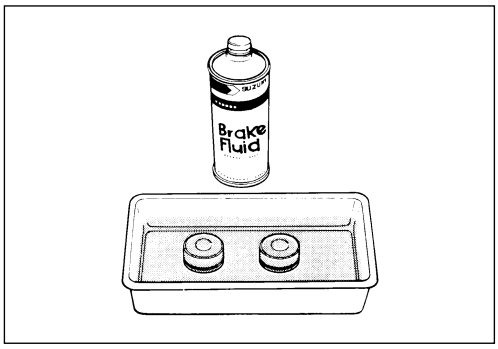


**CAUTION**

- *** Wash the brake caplier components with new brake fluid before reassembly.**
- *** Do not wipe the breke fluid off after washing the components.**
- *** When washing the components, use the specified brake fluid. Never usedifferent types of fluid or cleaning solvent such as gasoline, kerosine, etc.**
- *** Replace the piston seals and dust seals with new ones.**
- *** Apply brake fluid to all of the seals, brake caliper bores and pistons before reassembly.**

- Apply SUZUKI SILICON GREASE to the brake caliper holder.

**09900-25100: SUZUKI SILICONE GREASE**

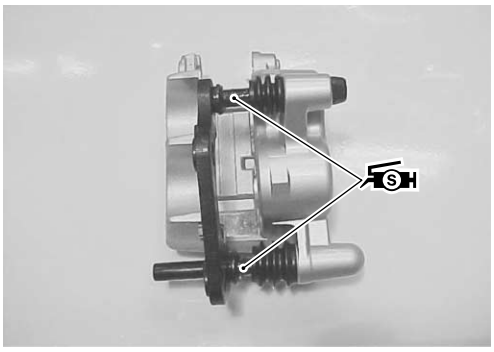

- When installing the spring ①, pay attention to the direction of it.

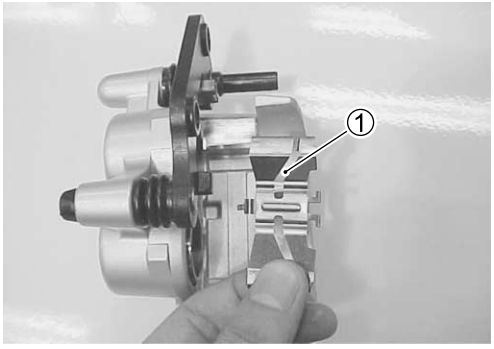

- Tighten the brake caliper mounting bolts ① and brake hose union bolt ② to the specified torque.

**Brake caliper mounting bolt ①: 35 N·m (3.5 kgf·m, 25.5 lb-ft)**

**Brake hose union bolt ②: 23 N·m (2.3 kgf·m, 16.5 lb-ft)**

*NOTE:*

*Before remounting the caliper, push the piston all the way into the caliper.*

**CAUTION**

**Bleed air from the system after installing the brake caliper.**

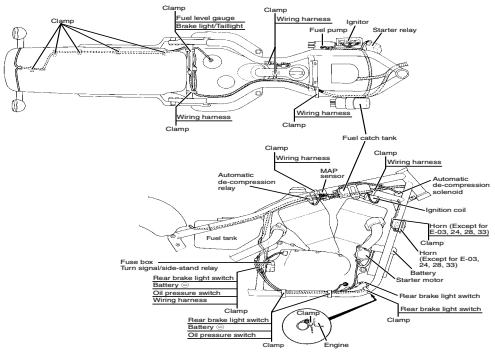

# REAR BRAKE

## CONSTRUCTION

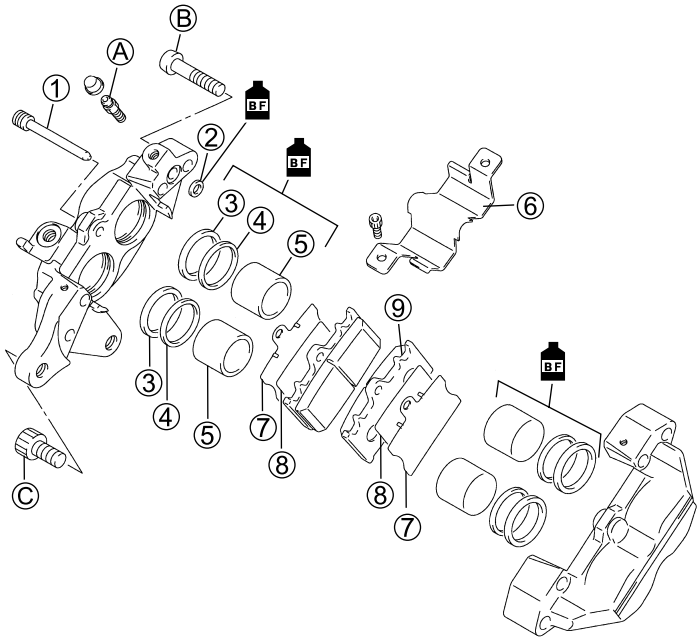


① Brake pad mounting pin
② O-ring
③ Piston seal
④ Dust seal
⑤ Piston
⑥ Brake pad cover
⑦ Shim
⑧ Damper shim
⑨ Brake pad
⑩ Diaphragm
⑪ Reservoir tank
⑫ Connector
⑬ O-ring
⑭ Dust boot
⑮ Snap ring
⑯ Push rod
⑰ Piston
⑱ Secondary cup
⑲ Return spring

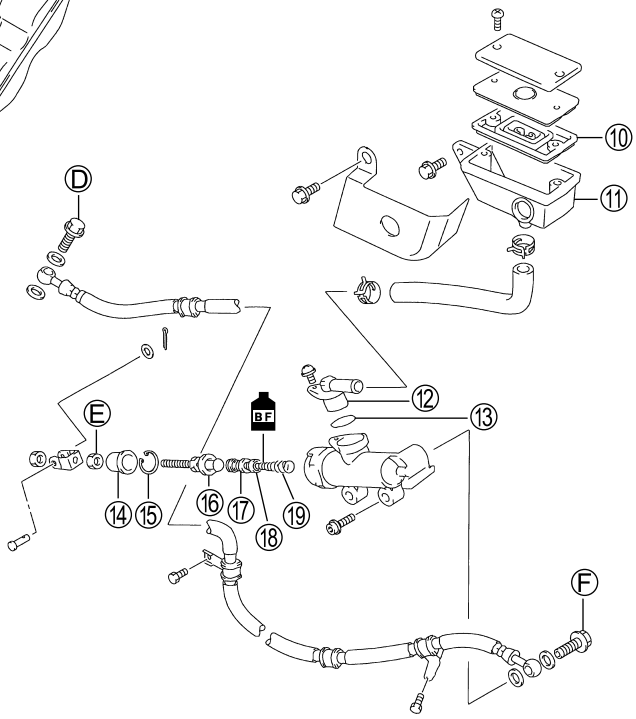


| ITEM | N·m | Kgf·m | lb-ft |
|---|---|---|---|
| Ⓐ | 7.5 | 0.75 | 5.5 |
| Ⓑ | 21 | 2.1 | 15.1 |
| Ⓒ | 35 | 3.5 | 25.5 |
| Ⓓ, Ⓕ | 23 | 2.3 | 16.5 |
| Ⓔ | 18 | 1.8 | 13.0 |

Ⓐ Brake caliper air bleeder valve
Ⓑ Brake caliper housing bolt
Ⓒ Brake caliper mounting bolt
Ⓓ Brake hose union bolt
Ⓔ Brake master cylinder rod lock nut
Ⓕ Brake hose union bolt

**⚠ WARNING**

- **This brake system is filled with an ethylene glycol-based DOT 4 brake fluid. Do not use or mix different types of fluid such as silicone-based or petroleum-based.**
- **Do not use any brake fluid taken from old, used or unsealed containers. Never reuse brake fluid left over from the last servicing or stored for long periods.**
- **When storing the brake fluid, seal the container completely and keep away from children.**
- **When replenishing brake fluid, take care not to get dust into fluid.**
- **When washing brake components, use fresh brake fluid. Never use cleaning solvent.**
- **A contaminated brake disc or brake pad reduces braking performance. Discard contaminated pads and clean the disc with high quality brake cleaner or neutral detergent.**

**CAUTION**

**Handle brake fluid with care: the fluid reacts chemically with paint, plastics, rubber materials etc.**

## BRAKE PAD REPLACEMENT

- Remove the brake pad cover ①.
- Remove the brake pad mounting pin ②.

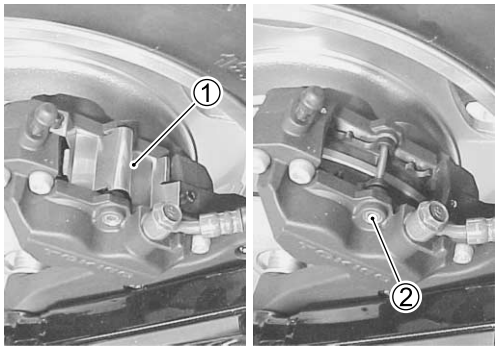


- Remove the prake pads, damper shims and shims.

**CAUTION**

> *** Do not operate the brake pedal while dismounting the pads.**
> *** Replace the brake pads as a set, otherwise braking performance will be adversely affected.**

- Install the new brake pads along with the damper shims ③ and shims ④.

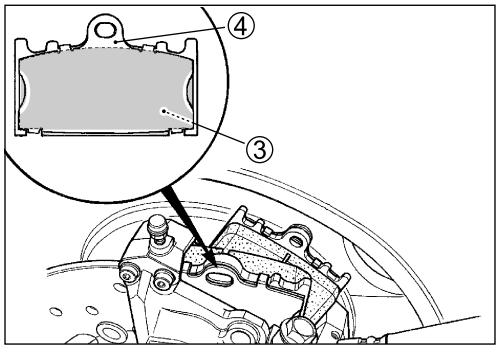


- Tighten the brake pad mounting pin ⑤.

**Brake pad mounting pin: 16 N·m (1.6 kgf·m, 11.5 lb-ft)**

*NOTE:*
*After replacing the brake pads, pump the brake pedal few times to operate the brake correctly and then check the brake fluid level.*

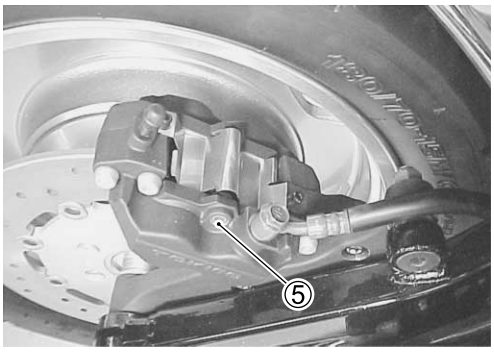


## BRAKE FLUID REPLACEMENT

- Remove the brake fluid reservoir cap.
- Replace the brake fluid in the same manner as the front brake. (☞ 11-5)

**Specification and Classification: DOT 4**

**CAUTION**

> **Bleed air from the brake system.**

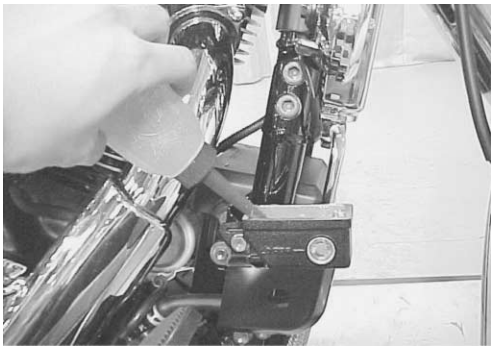

## BRAKE CALIPER REMOVAL AND DISASSEMBLY

- Remove the 1st muffler ①.

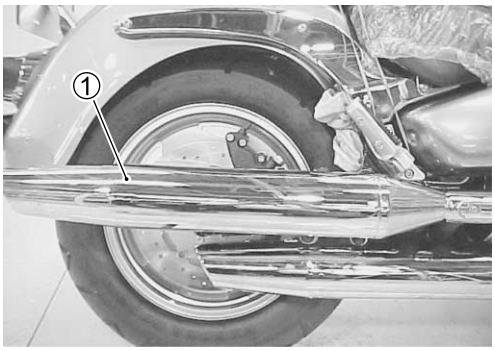


- Remove the union bolt ② and catch the brake fluid in a suitable receptacle.

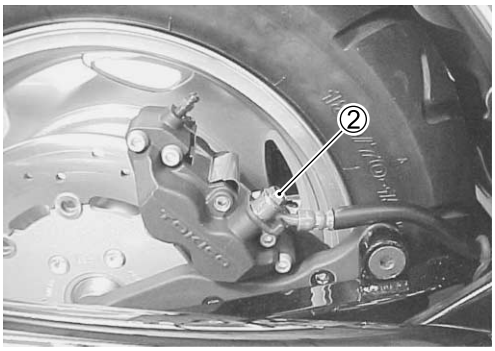


**CAUTION**

**Never reuse the brake fluid left over from previous servicing and stored for long periods.**

**⚠ WARNING**

**Brake fluid, if it leaks, will interfere with safe running and discolor painted surfaces. Check the brake hose and hose joints for cracks and fluid leakage.**

- Loosen the rear axle nut.
- Remove the caliper mounting bracket bolt ③ and nut.

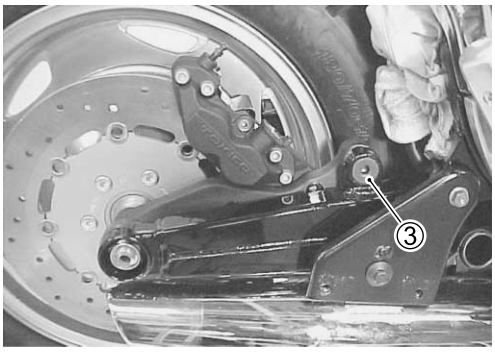


- Remove the brake caliper by removing the mounting bolts ④.

*NOTE:*
*Slightly loosen the caliper housing bolts ⑤ before removing the caliper mounting bolts to facilitate later disassembly.*

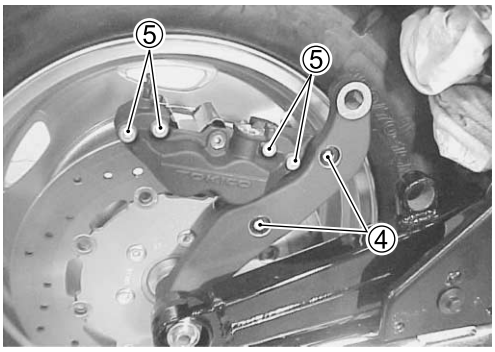


- Remove the brake pads. (☞ 11-11)
- Remove the caliper housing bolts ⑤.
- Separate the caliper halves.

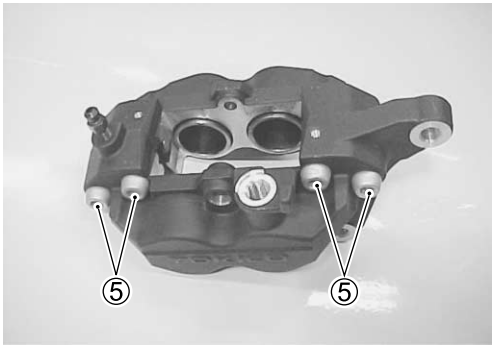

- Place a rag over the pistons to prevent them from popping out and then force out the pistons using compressed air.

**CAUTION**

**Do not use high pressure air to prevent piston damage.**

- Remove the dust seals and piston seals.

**CAUTION**

**Do not reuse the dust seals and piston seals to prevent brake fluid leakage.**

## CALIPER INSPECTION

**BRAKE CALIPER INSPECTION:** ☞ 11-7
**PISTON:** ☞ 11-7
**DISC:** ☞ 11-7

## CALIPER REASSEMBLY AND REMOUNTING

Reassemble and remount the caliper in the reverse order of removal and disassembly. Pay attention to the following points:

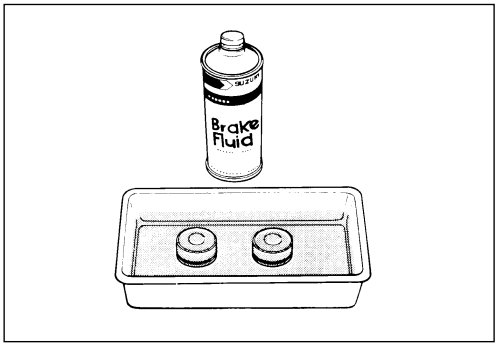


**CAUTION**

* **Wash the caliper components with fresh brake fluid before reassembly. Never use cleaning solvent or gasoline to wash them.**
* **Apply brake fluid to the caliper bore and piston to be inserted into the bore.**

**Specification and Classification: DOT 4**

- Install the O-ring ①.

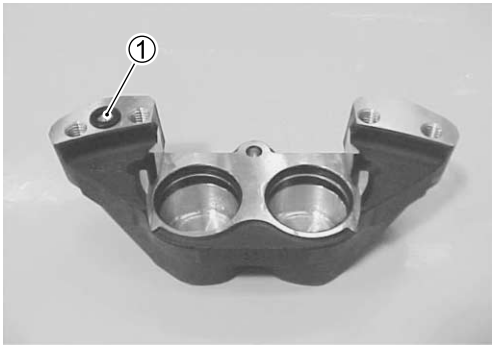


**CAUTION**

**Replace the O-ring with a new one.**

- Tighten each bolt and nut to the specified torque.

**Brake caliper mounting bolt ①: 35 N·m (3.5 kgf·m, 25.5 lb-ft)**

*NOTE:*
*Before remounting the caliper, push the piston all the way into the caliper.*

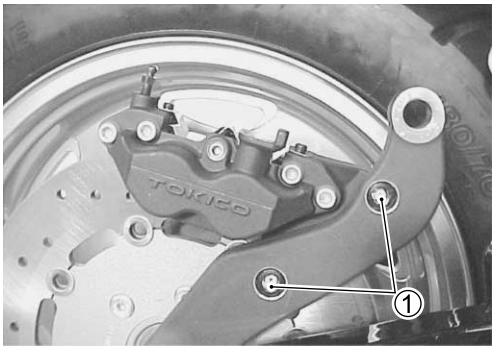


**Rear axle nut ②: 110 N·m (11.0 kgf·m, 79.5 lb-ft)**
**Brake caliper mounting bracket bolt/nut ③ : 60 N·m (6.0 kgf·m, 43.5 lb-ft)**
**Brake caplier housing bolt ④: 21 N·m (2.1 kgf·m, 15.1 lb-ft)**

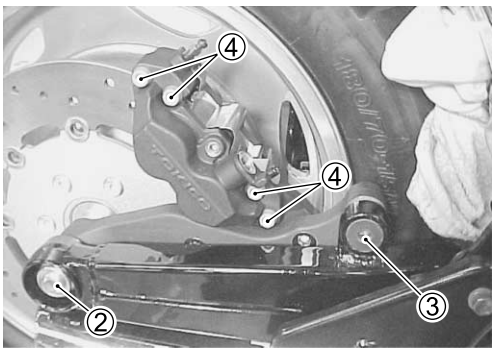


**Brake hose union bolt ⑤: 23 N·m (2.3 kgf·m, 16.5 lb-ft)**

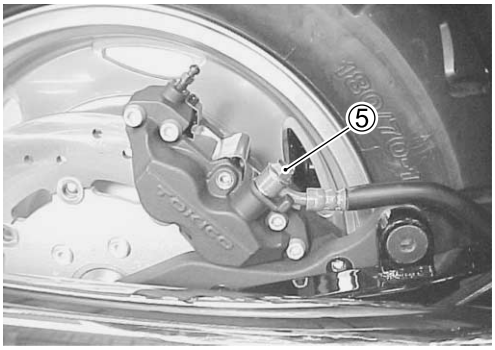


- When installing the 1st muffler, apply gas sealer to the inside and outside of the exhaust pipe connector.

**EXHAUST GAS SEALER: PERMATEX 1372**

**Muffler connecting bolt: 23 N·m (2.3 kgf·m, 16.5 lb-ft)**
**Muffler mounting bolt : 23 N·m (2.3 kgf·m, 16.5 lb-ft)**

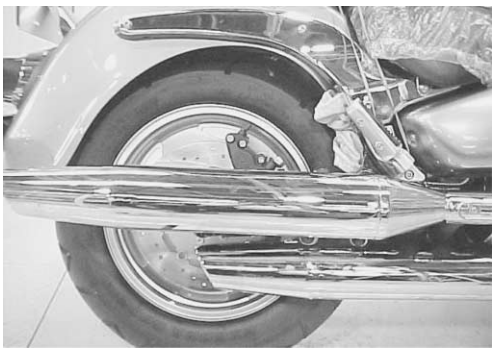

**CAUTION**

**Bleed air from the system after reassembling the caliper.**

# WIRE HARNESS ROUTING

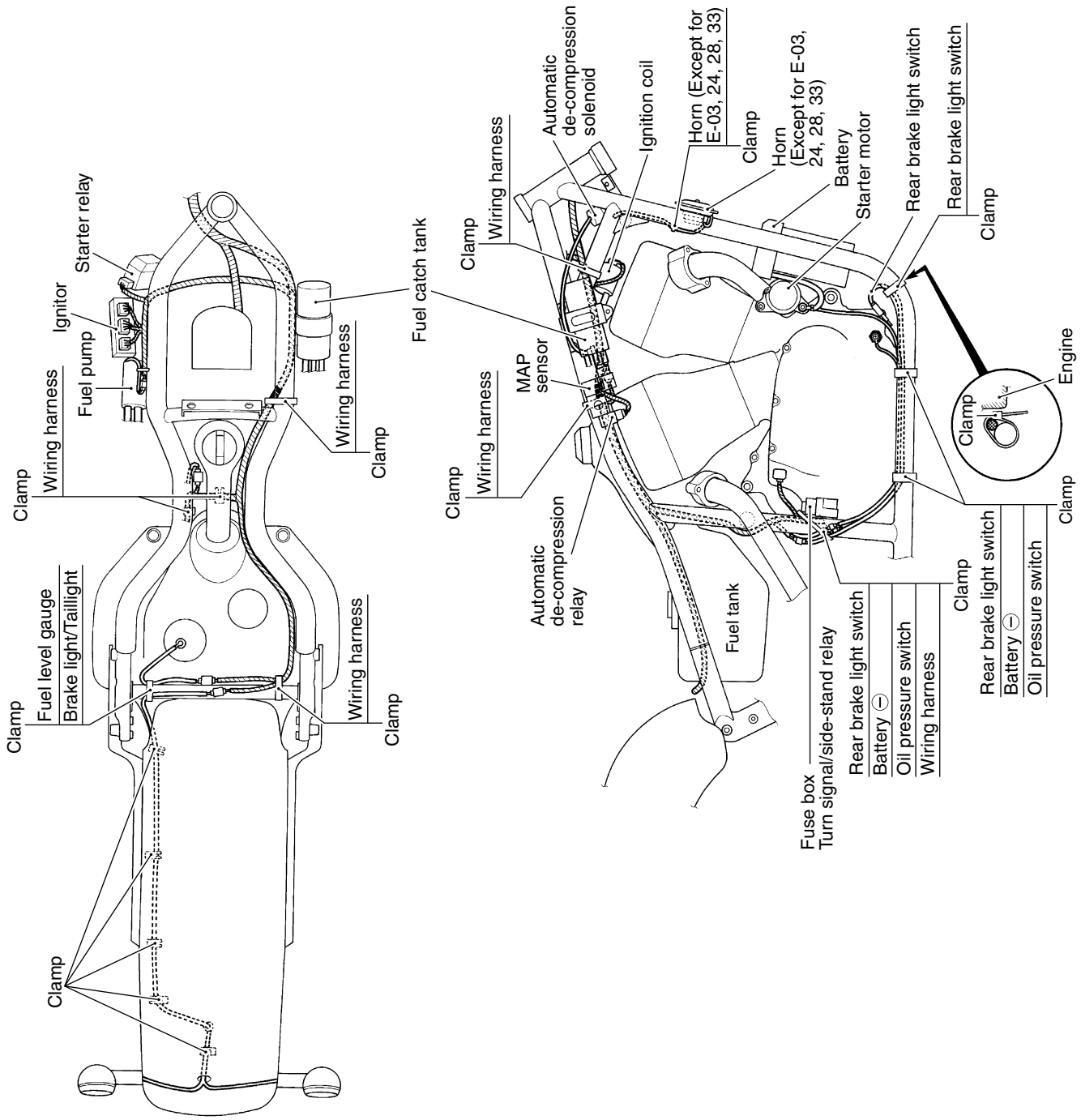

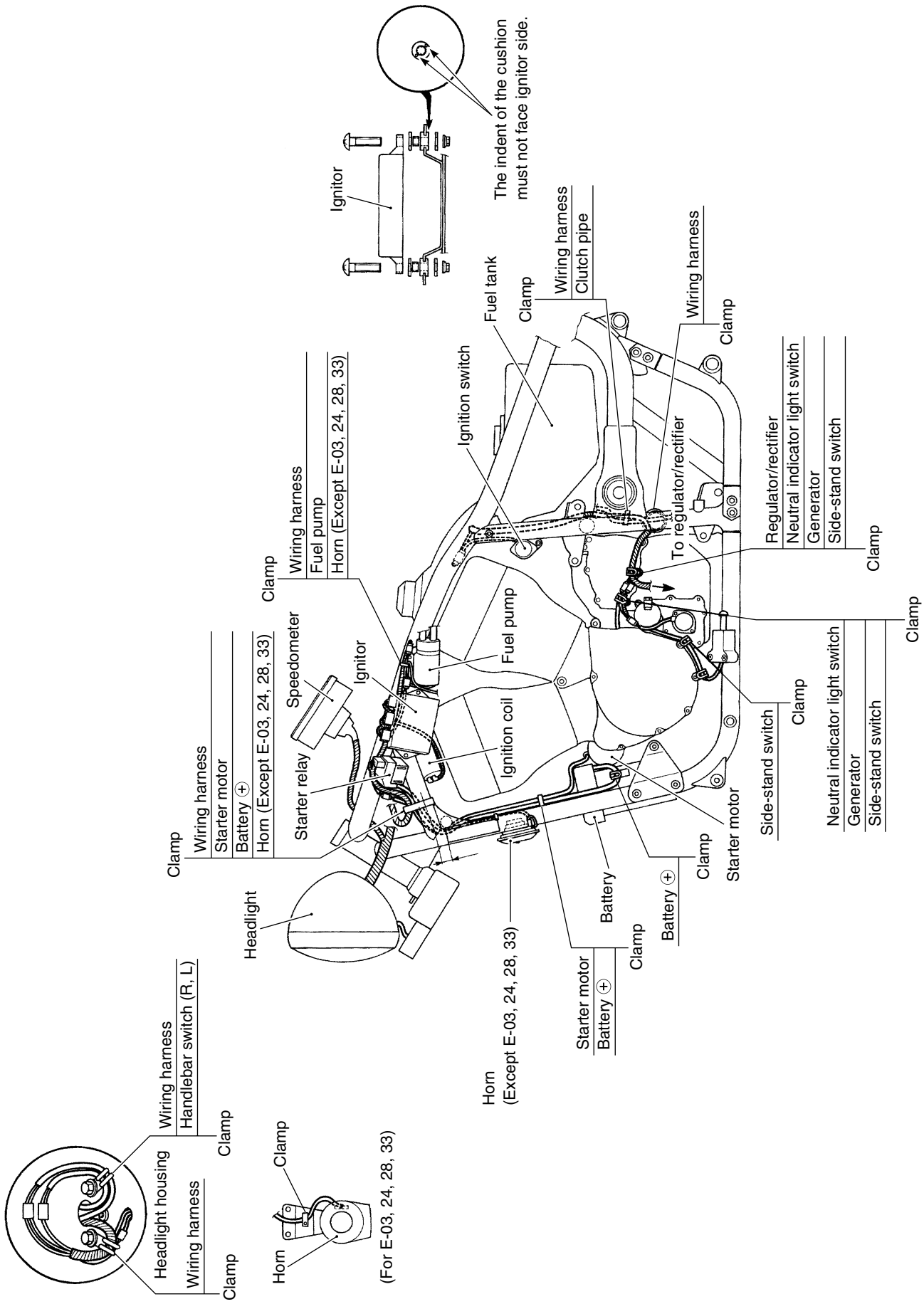
Ignitor
The indent of the cushion must not face ignitor side.
Fuel tank
Clamp
Wiring harness
Clutch pipe
Wiring harness
Clamp
Ignition switch
Wiring harness
Fuel pump
Horn (Except E-03, 24, 28, 33)
Clamp
To regulator/rectifier
Regulator/rectifier
Neutral indicator light switch
Generator
Side-stand switch
Clamp
Clamp
Fuel pump
Speedometer
Ignitor
Ignition coil
Starter relay
Wiring harness
Starter motor
Battery ⊕
Horn (Except E-03, 24, 28, 33)
Clamp
Clamp
Side-stand switch
Neutral indicator light switch
Generator
Side-stand switch
Starter motor
Clamp
Battery ⊕
Battery
Clamp
Headlight
Horn (Except E-03, 24, 28, 33)
Starter motor
Battery ⊕
Wiring harness
Handlebar switch (R, L)
Clamp
Headlight housing
Wiring harness
Clamp
Clamp
Horn
(For E-03, 24, 28, 33)

# FRONT BRAKE HOSE ROUTING

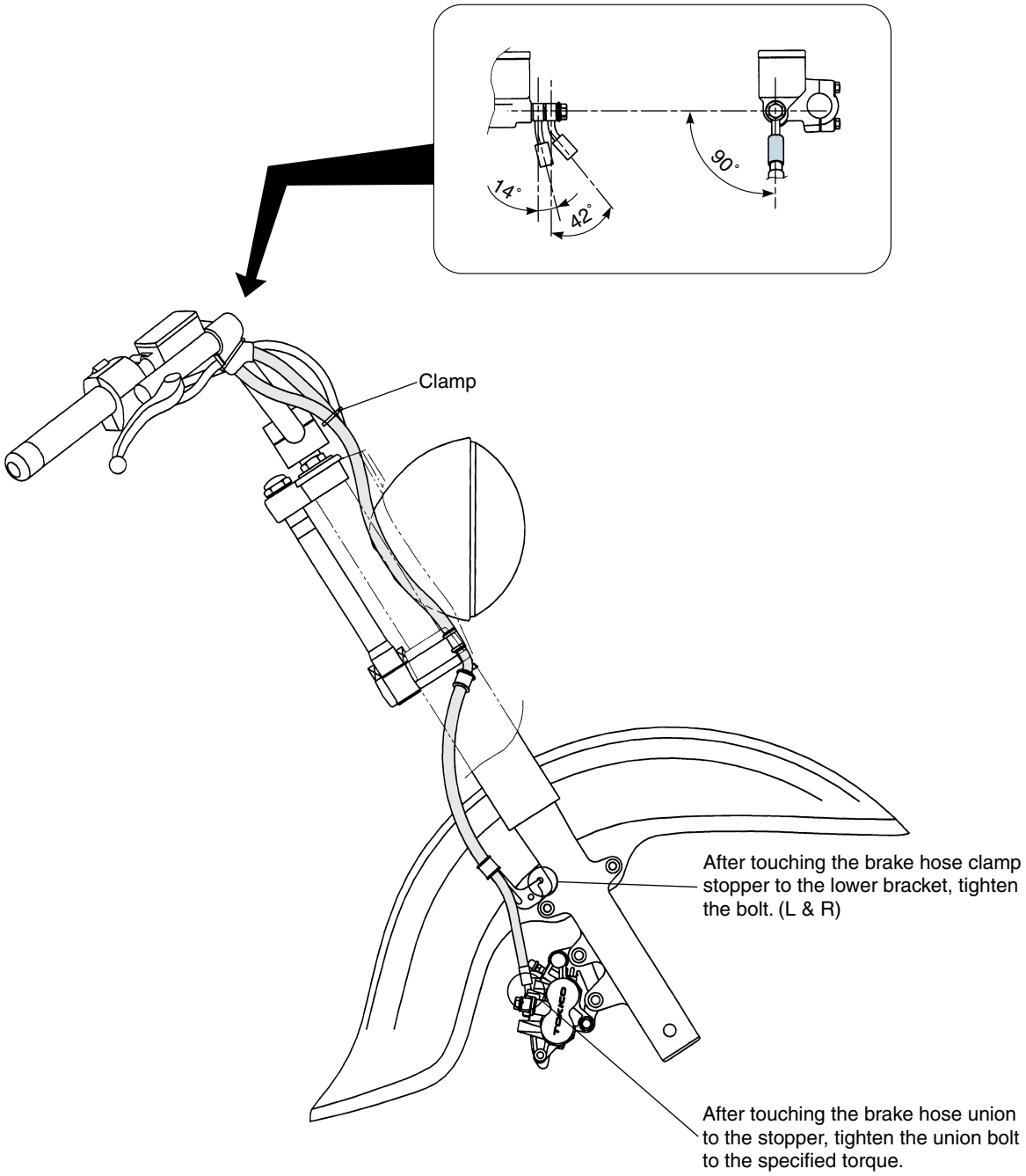

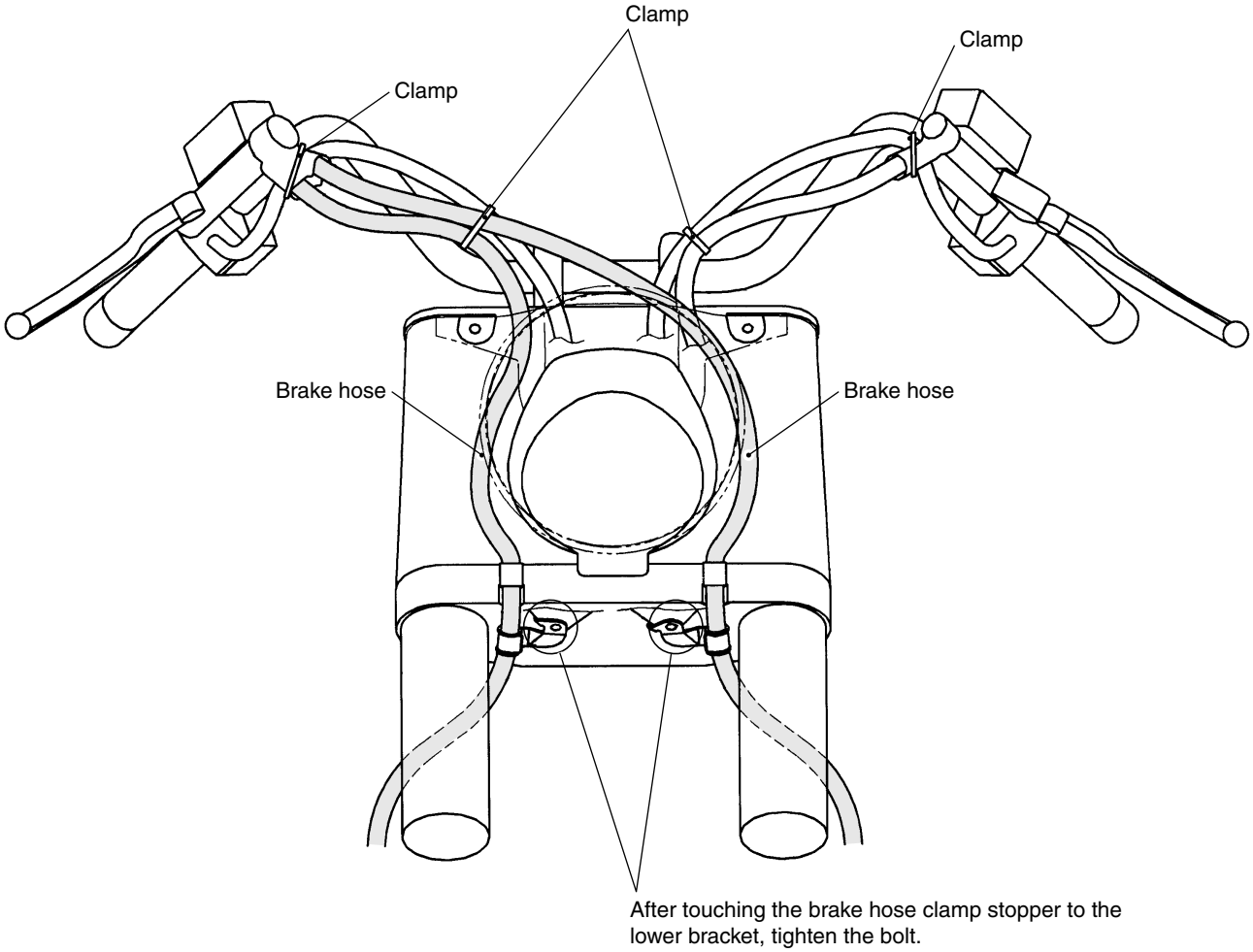
Clamp
Clamp
Clamp
Brake hose
Brake hose
After touching the brake hose clamp stopper to the lower bracket, tighten the bolt.

# REAR BRAKE HOSE ROUTING

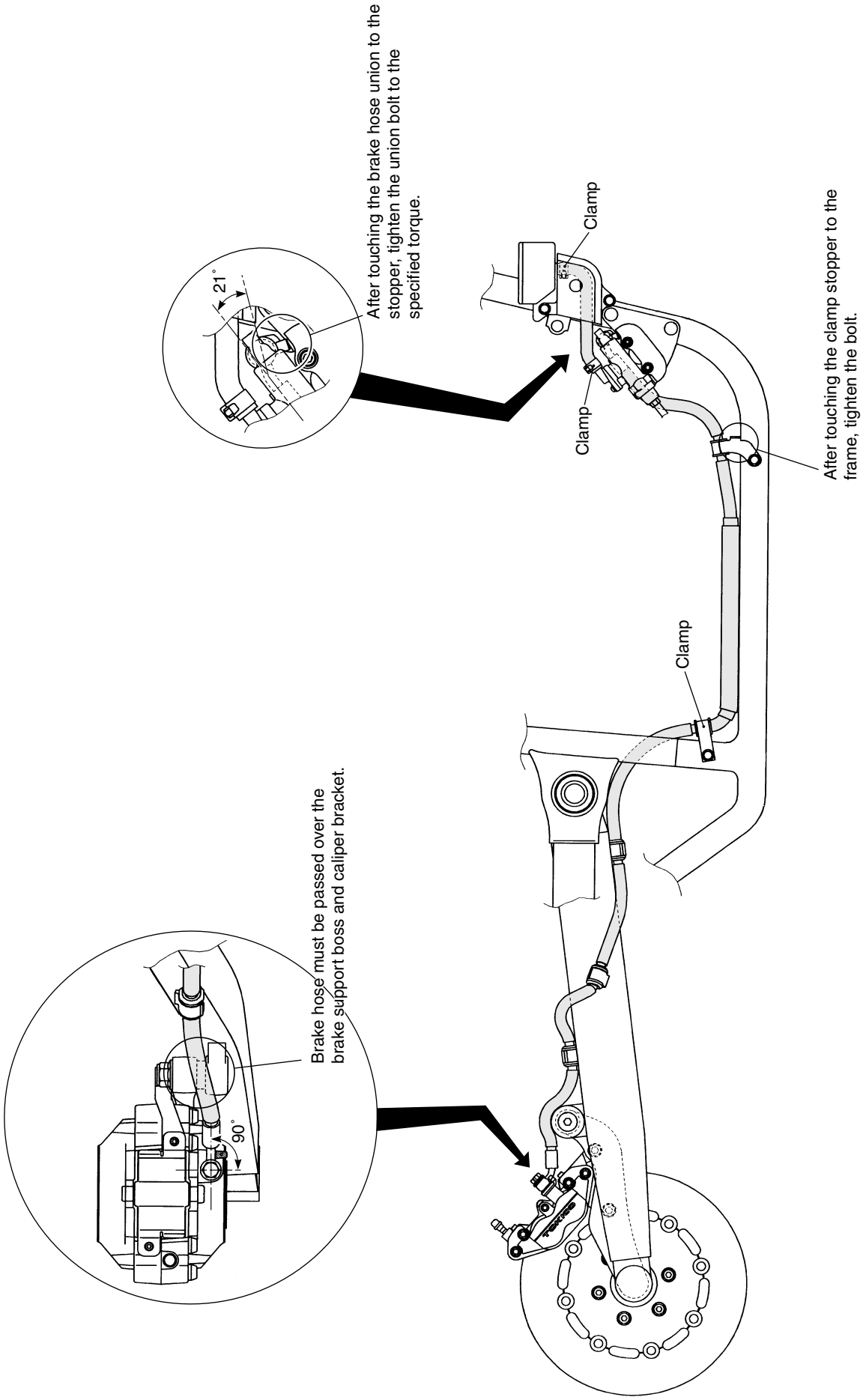

# SERVICE DATA

## VALVE + GUIDE

Unit: mm (in)

| ITEM | STANDARD | | LIMIT |
|---|---|---|---|
| Valve diam. | IN. | 33<br>(1.3) | ——— |
| | EX. | 40<br>(1.6) | ——— |
| Lash-adjuster plunger stroke | 0 – 0.5<br>(0 – 0.02) | | ——— |
| Valve guide to valve stem clearance | IN. | 0.010 – 0.037<br>(0.0004 – 0.0015) | ——— |
| | EX. | 0.040 – 0.070<br>(0.0016 – 0.0028) | ——— |
| Valve stem deflection | IN. & EX. | ——— | 0.35<br>(0.014) |
| Valve guide I.D. | IN. | 5.500 – 5.512<br>(0.2165 – 0.2170) | ——— |
| | EX. | 7.000 – 7.015<br>(0.2756 – 0.2762) | ——— |
| Valve stem O.D. | IN. | 5.475 – 5.490<br>(0.2156 – 0.2161) | ——— |
| | EX. | 6.945 – 6.960<br>(0.2734 – 0.2740) | ——— |
| Valve stem runout | IN. & EX. | ——— | 0.05<br>(0.002) |
| Valve head thickness | IN. & EX. | ——— | 0.5<br>(0.02) |
| Valve stem end length | IN. | ——— | 2.5<br>(0.10) |
| | EX. | ——— | 2.2<br>(0.09) |
| Valve seat width | IN. | 0.9 – 1.1<br>(0.035 – 0.043) | ——— |
| | EX. | 1.0 – 1.2<br>(0.039 – 0.047) | ——— |
| Valve head radial runout | IN. & EX. | ——— | 0.03<br>(0.001) |
| Valve spring free length (INTAKE) | INNER | ——— | 35.0<br>(1.38) |
| | OUTER | ——— | 37.8<br>(1.49) |
| Valve spring free length (EXHAUST) | ——— | | 40.6<br>(1.60) |
| Valve spring tension (INTAKE) | INNER | 5.3 – 6.5 kgf<br>(11.68 – 14.33 lbs)<br>at length 28.0 mm (1.10 in) | ——— |
| | OUTER | 14.0 – 14.2 kgf<br>(30.86 – 31.31 lbs)<br>at length 31.5 mm (1.24 in) | ——— |
| Valve spring tension (EXHAUST) | 20.3 – 23.3 kgf<br>(44.75 – 51.37 lbs)<br>at length 35.0 mm (1.38 in) | | ——— |

## CAMSHAFT + CYLINDER HEAD

Unit: mm (in)

| ITEM | STANDARD | | LIMIT |
|---|---|---|---|
| Cam height | IN. | 35.680 – 35.730<br>(1.4047 – 1.4067) | 35.38<br>(1.393) |
| | EX. | 36.880 – 36.930<br>(1.4521 – 1.4537) | 36.58<br>(1.440) |
| Camshaft journal oil clearance | IN. & EX. | 0.032 – 0.066<br>(0.0013 – 0.0026) | 0.150<br>(0.0060) |
| Camshaft journal holder I.D. | Front head right side,<br>rear head left side | 20.012 – 20.025<br>(0.7879 – 0.7884) | ——— |
| | Front head left side,<br>rear head right side | 25.012 – 25.025<br>(0.9847 – 0.9852) | ——— |
| Camshaft journal O.D. | Front head right side,<br>rear head left side | 19.959 – 19.980<br>(0.7858 – 0.7866) | ——— |
| | Front head left side,<br>rear head right side | 24.959 – 24.980<br>(0.9826 – 0.9835) | ——— |
| Camshaft runout | Front & Rear | ——— | 0.10<br>(0.004) |
| Rocker arm I.D. | IN. | 14.000 – 14.018<br>(0.5511 – 0.5519) | ——— |
| | EX. | 16.000 – 16.018<br>(0.6299 – 0.6303) | ——— |
| Rocker arm shaft O.D. | IN. | 13.966 – 13.984<br>(0.5498 – 0.5506) | ——— |
| | EX. | 15.966 – 15.984<br>(0.6286 – 0.6293) | ——— |
| Cylinder head distortion | ——— | | 0.05<br>(0.002) |
| Cylinder head cover distortion | ——— | | 0.05<br>(0.002) |

## CYLINDER + PISTON + PISTON RING

Unit: mm (in)

| ITEM | STANDARD | | | LIMIT |
|---|---|---|---|---|
| Campression pressure<br>(Automatic de-compression actuated) | 1 000 – 1 400 kPa<br>(10 – 14 kgf/cm²<br>142 – 199 psi) | | | ——— |
| Campression pressure difference | ——— | | | 200 kPa<br>(2 kgf/cm²<br>28 psi) |
| Piston to cylinder clearance | 0.02 – 0.03<br>(0.0008 – 0.0012) | | | 0.120<br>(0.0047) |
| Cylinder bore | 96.000 – 96.015<br>(3.7795 – 3.7801) | | | Nicks or<br>Scratches |
| Piston diam. | 95.975 – 95.990<br>(3.7785 – 3.7791)<br>Measure at 16 mm (0.6 in) from the skirt end. | | | 95.88<br>(37.7748) |
| Cylinder distortion | ——— | | | 0.05<br>(0.002) |
| Piston ring free end gap | 1st | T | Approx. 13.5<br>(0.53) | 10.8<br>(0.43) |
| | 2nd | T | Approx. 14.0<br>(0.55) | 11.2<br>(0.44) |

| ITEM | STANDARD | | LIMIT |
|---|---|---|---|
| Piston ring end gap | 1st | 0.30 – 0.45<br>(0.012 – 0.018) | 0.70<br>(0.028) |
| | 2nd | 0.45 – 0.60<br>(0.018 – 0.024) | 1.00<br>(0.039) |
| Piston ring to groove clearance | 1st | ——— | 0.180<br>(0.007) |
| | 2nd | ——— | 0.150<br>(0.006) |
| Piston ring groove width | 1st | 1.210 – 1.230<br>(0.0476 – 0.0484) | ——— |
| | 2nd | 1.510 – 1.530<br>(0.0594 – 0.0602) | ——— |
| | Oil | 2.810 – 2.830<br>(0.1106 – 0.1114) | ——— |
| Piston ring thickness | 1st | 1.160 – 1.175<br>(0.0457 – 0.0463) | ——— |
| | 2nd | 1.470 – 1.490<br>(0.0579 – 0.0587) | ——— |
| Piston pin bore | 23.002 – 23.008<br>(0.9056 – 0.9058) | | 23.030<br>(0.9067) |
| Piston pin O.D. | 22.992 – 23.000<br>(0.9052 – 0.9055) | | 22.980<br>(0.9047) |

## CONROD + CRANKSHAFT

Unit: mm (in)

| ITEM | STANDARD | LIMIT |
|---|---|---|
| Conrod small end I.D. | 23.015 – 23.023<br>(0.9061 – 0.9064) | 23.040<br>(0.9071) |
| Conrod big end side clearance | 0.10 – 0.20<br>(0.004 – 0.008) | 0.3<br>(0.012) |
| Conrod big end width | 21.95 – 22.00<br>(0.864 – 0.866) | ——— |
| Crank pin width | 22.10 – 22.15<br>(0.870 – 0.872) | ——— |
| Conrod big end oil clearance | 0.024 – 0.042<br>(0.0009 – 0.0017) | 0.080<br>(0.0031) |
| Crank pin O.D. | 49.982 – 50.000<br>(1.9678 – 1.9685) | ——— |
| Crankshaft journal oil clearance | 0.020 – 0.050<br>(0.0008 – 0.0020) | 0.080<br>(0.0031) |
| Crankshaft journal O.D. | 51.965 – 51.980<br>(2.0459 – 2.0465) | ——— |
| Crankshaft journal I.D. | 52.000 – 52.015<br>(2.0472 – 2.0478) | ——— |
| Crankshaft thrust bearing thickness | 1.925 – 2.175<br>(0.0758 – 0.0856) | ——— |
| Crankshaft thrust clearance | 0.05 – 0.10<br>(0.002 – 0.004) | ——— |
| Crankshaft runout | ——— | 0.05<br>(0.002) |

## OIL PUMP

| ITEM | STANDARD | LIMIT |
|---|---|---|
| Oil pump reduction ratio | 1.154 (76/51 × 31/40) | ——— |
| Oil pressure (at 60°C, 140°F) | Above 350 kPa (3.5 kgf/cm², 50 psi)<br>Below 650 kPa (6.5 kgf/cm², 92 psi)<br>at 3 000 r/min. | ——— |

## CLUTCH

Unit: mm (in)

| ITEM | STANDARD | LIMIT |
|---|---|---|
| Drive plate thickness | 2.90 – 3.10<br>(0.114 – 0.122) | 2.60<br>(0.102) |
| Drive plate claw width | 15.6 – 15.8<br>(0.614 – 0.622) | 14.8<br>(0.583) |
| Driven plate distortion | ——— | 0.10<br>(0.004) |
| Clutch spring free length | 34.47<br>(1.357) | 32.7<br>(1.29) |
| Clutch master cylinder bore | 14.000 – 14.043<br>(0.5512 – 0.5529) | ——— |
| Clutch master cylinder piston diam. | 13.957 – 13.984<br>(0.5495 – 0.5506) | ——— |
| Clutch release cylinder bore | 33.600 – 33.662<br>(1.3228 – 1.3253) | ——— |
| Clutch release cylinder piston diam. | 33.550 – 33.575<br>(1.3209 – 1.3218) | ——— |

## DRIVE TRAIN

Unit: mm (in) Except ratio

| ITEM | | STANDARD | LIMIT |
|---|---|---|---|
| Primary reduction ratio | | 1.490 (76/51) | ——— |
| Secondary reduction ratio | | 0.852 (29/34) | ——— |
| Final reduction ratio | | 2.666 (19/19 × 32/12) | ——— |
| Gear ratios | Low | 3.000 (36/12) | ——— |
| | 2nd | 1.823 (31/17) | ——— |
| | 3rd | 1.333 (28/21) | ——— |
| | 4th | 1.041 (25/24) | ——— |
| | Top | 0.884 (23/26) | ——— |
| Shift fork to groove clearance | | 0.1 – 0.3<br>(0.004 – 0.012) | 0.5<br>(0.020) |
| Shift fork groove width | | 5.50 – 5.60<br>(0.217 – 0.220) | ——— |
| Shift fork thickness | | 5.30 – 5.40<br>(0.209 – 0.213) | ——— |
| Damper spring free length | | ——— | 73.6<br>(2.90) |
| Gearshift lever height | | 82<br>(3.23) | ——— |
| Secondary bevel gear backlash | | 0.03 – 0.15<br>(0.001 – 0.006) | ——— |
| Final bevel gear backlash | | 0.03 – 0.64<br>(0.001 – 0.025) | ——— |

## CARBURETOR

| ITEM | STANDARD | | |
|---|---|---|---|
| | E-28 | E-24 | E-02, 19 |
| Carburetor type | BDSR36 | ← | ← |
| Bore size | 36.5 mm | ← | ← |
| I.D. No. | 10F1 | 10F2 | 10F9 |
| Idle r/min. | 1 000 ± 100 r/min. | ← | ← |
| Float height | 7.0 ± 0.5 mm<br>(0.28 ± 0.02 in) | ← | ← |
| Main jet (M.J.) | F: # 112.5<br>R: # 110 | F: #112.5<br>R: #110 | ← |
| Jet needle (J.N.) | F: 5D95-56<br>R: 5E9-56 | F: 5D94-56-3<br>R: 5E8-56-3 | F: 5D124-3<br>R: 5E19-3 |
| Needle jet (N.J.) | P-0M | P-0 | P-0M |
| Throttle valve (Th.V.) | #90 | ← | ← |
| Pilot jet (P.J.) | #32.5 | #32.5 | ← |
| Pilot screw (P.S.) | PRE-SET<br>(F: 2 1/4 turns back<br>R: 2 1/8 turns back) | PRE-SET<br>(F: 2 turns back<br>R: 2 turns back) | PRE-SET<br>(F: 1 3/4 turns back<br>R: 1 3/8 turns back) |
| Throttle cable play | 2.0 – 4.0 mm<br>(0.08 – 0.16 in) | ← | ← |

## CARBURETOR

| ITEM | STANDARD | | |
|---|---|---|---|
| | E-03 | E-33 | P-37 |
| Carburetor type | BDSR36 | ← | ← |
| Bore size | 36.5 mm | ← | ← |
| I.D. No. | 10F1 | 10F7 | 10F6 |
| Idle r/min. | 1 000 ± 100 r/min. | ← | ← |
| Float height | 7.0 ± 0.5 mm<br>(0.28 ± 0.02 in) | ← | ← |
| Main jet (M.J.) | F: #112.5<br>R: #110 | ← | F: #112.5<br>R: #110 |
| Jet needle (J.N.) | F: 5D95-56<br>R: 5E9-56 | ← | F: 5D94-56-3<br>R: 5E8-56-3 |
| Needle jet (N.J.) | P-0M | ← | P-0 |
| Throttle valve (Th.V.) | # 90 | ← | ← |
| Pilot jet (P.J.) | #32.5 | ← | #32.5 |
| Pilot screw (P.S.) | PRE-SET | ← | PRE-SET<br>(F: 2 turns back<br>R: 2 turns back) |
| Throttle cable play | 2.0 – 4.0 mm<br>(0.08 – 0.16 in) | ← | ← |

## ELECTRICAL

Unit: mm (in)

| ITEM | | | SPECIFICATION | NOTE |
|---|---|---|---|---|
| Firing order | | | R · F | |
| Spark plug | | Type | NGK: DPR7EA-9<br>DENSO: X22EPR-U9 | |
| | | Gap | 0.8 – 0.9<br>(0.031 – 0.035) | |
| Spark performance | | | Over 8 (0.3) at 1 atm. | |
| Signal coil resistance | | | 178 – 242 Ω | Bl – G |
| Signal coil peak voltage | | | More than 2.4 V | |
| Ignition coil resistance | | Primary | 1 – 7 Ω | ⊕ tap – ⊖ tap |
| | | Secondary | 18 – 28 kΩ | Plug cap – ⊕ tap |
| Ignition coil primary peak voltage | | Front | More than 190 V | B/Y – Ground |
| | | Rear | More than 200 V | W – Ground |
| Generator Max. output | | | Approx. 340 W at 5 000 r/min. | |
| Generator no-load voltage (when engine is cold) | | | More than 80 V (AC) at 5 000 r/min. | |
| Regulated voltage | | | 13.5 – 15.0 V at 5 000 r/min. | |
| Starter relay resistance | | | 3 – 6 Ω | |
| De-comp. solenoid resistance | | | 0.1 – 1.0 Ω | |
| Fuel pump resistance | | | 1 – 2.5 Ω | |
| Fuel pump discharge amount | | | More than 600 ml (1.27 US qt)/minute | |
| Battery | Type designation | | FTH16-BS-1 | |
| | Voltage | | 12 V | |
| | Capacity | | 50.4 kC (14 Ah)/10HR | |
| | Standard electrolyte S.G. | | 1.320 at 20°C (68°F) | |
| Fuse size | Headlight | HI | 15 A | |
| | | LO | 15 A | |
| | Signal | | 15 A | |
| | Ignition | | 10 A | |
| | Main | | 30 A | |
| | Power source | | 10 A | |

## WATTAGE

Unit: W

| ITEM | | SPECIFICATION | | |
|---|---|---|---|---|
| | | E-03, 28, 33 | E-24 | Others |
| Headlight | HI | 60 | ← | ← |
| | LO | 55 | ← | ← |
| Position light | | | | 4 |
| Brake light / Taillight | | 21/5 | ← | ← |
| Turn signal light | | 21/5 | 21 | ← |
| Running light | | 5 | | |
| Speedometer light | | 0.84 | ← | ← |
| Turn signal indicator light | | 1.7 | ← | ← |
| High beam indicator light | | 1.7 | ← | ← |
| Neutral indicator light | | 1.7 | ← | ← |
| Fuel level warning light | | 1.7 | ← | ← |

## BRAKE + WHEEL

Unit: mm (in)

| ITEM | STANDARD | | LIMIT |
|---|---|---|---|
| Rear brake pedal height | 98<br>(3.86) | | ——— |
| Brake disc thickness | Front | * 4.8 – 5.2<br>(0.189 – 0.205) | * 4.5<br>(0.18) |
| | Rear | 6.6 – 7.0<br>(0.260 – 0.276) | 6.3<br>(0.25) |
| Brake disc runout | ——— | | 0.30<br>(0.012) |
| Master cylinder bore | Front | * 15.870 – 15.913<br>(0.6248 – 0.6265) | ——— |
| | Rear | 12.700 – 12.743<br>(0.5000 – 0.5017) | ——— |
| Master cylinder piston diam. | Front | * 15.827 – 15.854<br>(0.6231 – 0.6242) | ——— |
| | Rear | 12.657 – 12.684<br>(0.4983 – 0.4994) | ——— |
| Brake caliper cylinder bore | Front | * 30.230 – 30.306<br>(1.1902 – 1.1931) | ——— |
| | Rear | * 30.230 – 30.306<br>(1.1902 – 1.1931) | ——— |
| Brake caliper piston diam. | Front | * 30.150 – 30.200<br>(1.1870 – 1.1890) | ——— |
| | Rear | * 30.150 – 30.200<br>(1.1870 – 1.1890) | ——— |
| Wheel rim runout | Axial | ——— | 2.0<br>(0.08) |
| | Radial | ——— | 2.0<br>(0.08) |
| Wheel axle runout | Front | ——— | 0.25<br>(0.010) |
| | Rear | ——— | 0.25<br>(0.010) |
| Wheel rim size | Front | 16 × MT3.50, 16M/C × MT3.50 | ——— |
| | Rear | 15M/C × MT5.00 | ——— |
| Tire size | Front | 150/80-16 71H, 150/80-16M/C 71H | ——— |
| | Rear | 180/70-15M/C 76H | ——— |
| Tire tread depth | Front | ——— | 1.6<br>(0.06) |
| | Rear | ——— | 2.0<br>(0.08) |

## SUSPENSION

Unit: mm (in)

| ITEM | STANDARD | LIMIT | NOTE |
|---|---|---|---|
| Front fork stroke | 140<br>(5.5) | _____ | |
| Front fork spring free length | 585<br>(23.03) | 573<br>(22.56) | |
| Front fork oil level | 169.0<br>(6.65) | _____ | |
| Rear shock absorber spring set length | 222.0<br>(8.74) | _____ | |
| Rear wheel travel | 118<br>(4.6) | _____ | |

## TIRE PRESSURE

| COLD INFLATION TIRE PRESSURE | SOLO RIDING | | | DUAL RIDING | | |
|---|---|---|---|---|---|---|
| | kPa | kgf/cm$^2$ | psi | kPa | kgf/cm$^2$ | psi |
| FRONT | 200 | 2.00 | 29 | 200 | 2.00 | 29 |
| REAR | 250 | 2.50 | 36 | 250 | 2.50 | 36 |

## FUEL + OIL

| ITEM | STANDARD | | LIMIT |
|---|---|---|---|
| Fuel type | Use only unleaded gasoline of at least 87 pump octane ($\frac{R+M}{2}$) or 91 octane or higher rated by the research method. Gasoline containing MTBE (Methyl Tertiary Butyl Ether), less than 10% ethanol, or less than 5% methanol with appropriate cosolvents and corrosion inhibitor is permissible. | | E-03, 28, 33 |
| | Gasoline used should be graded 91 octane or higher. An unleaded gasoline is recommended. | | The others |
| Fuel tank | 15.0 L<br>(4.0/3.3 US/Imp gal) | | |
| Engine oil type | SAE 10W/40, API SF or SG | | |
| Engine oil capacity | Change | 3 700 ml<br>(3.9/3.3 US/Imp qt) | |
| | Filter change | 4 300 ml<br>(4.5/3.8 US/Imp qt) | |
| | Overhaul | 5 000 ml<br>(5.3/4.4 US/Imp qt) | |
| Fuel fork oil type | SUZUKI FORK OIL SS-08 (#10)<br>or equivalent fork oil | | |
| Fuel fork oil capacity (each leg) | 439 ml<br>(14.8/15.5 US/Imp oz) | | |
| Bevel gear oil type | Hypoid Gear oil #90 API GL-5 | | |
| Bevel gear oil capacity | Final | 200 – 220 ml<br>(6.8/7.0 – 7.4/7.7 US/Imp oz) | |
| Brake fluid type | DOT 4 | | |

Prepared by

**SUZUKI MOTOR CORPORATION**

4th Ed. February, 2002
1st Ed. December, 1997
Part No. 99500-39164-01E
Printed in Japan

SUZUKI MOTOR CORPORATION

Printed in Japan TK
W X Y K1 K2